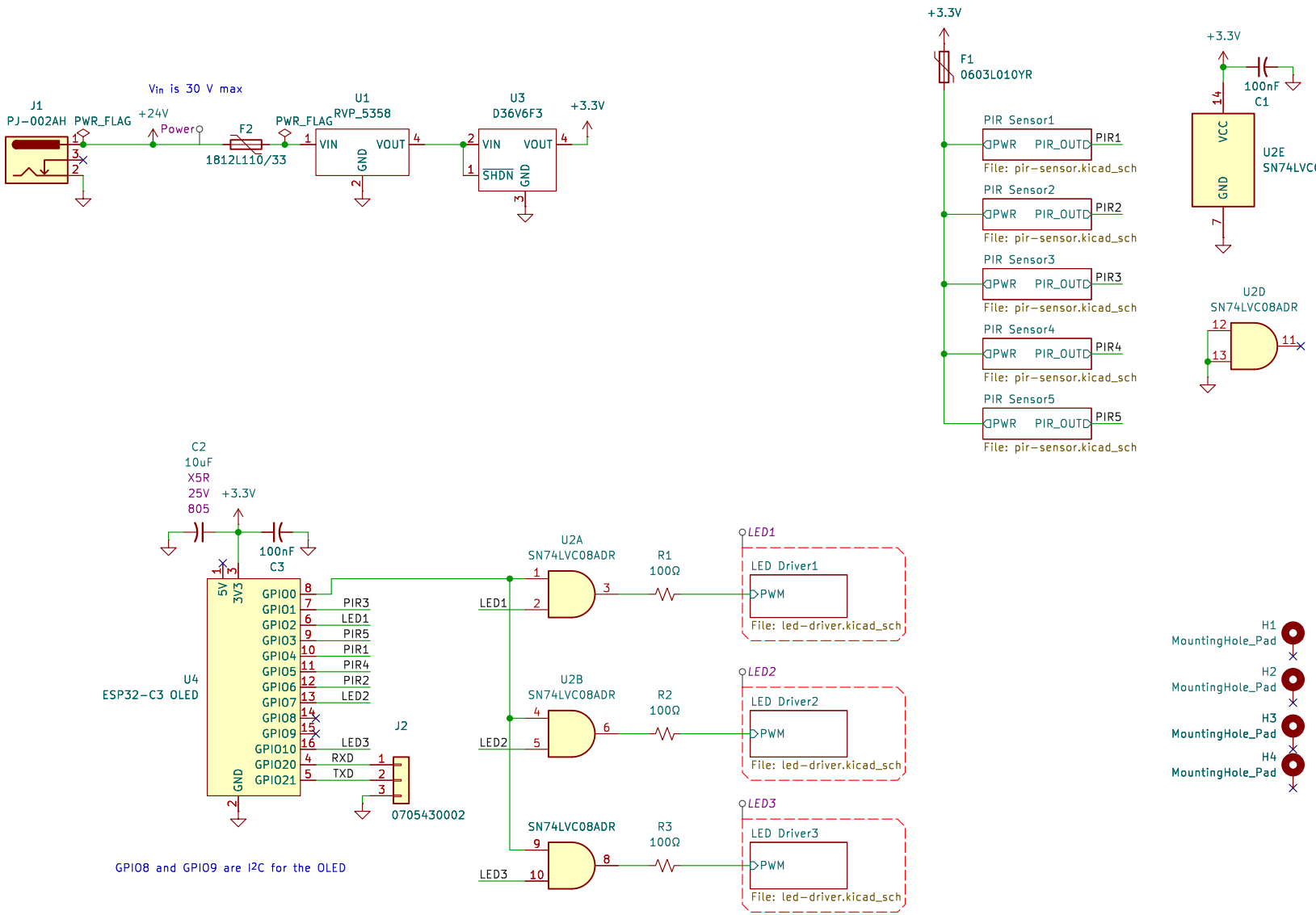

Sheet: /
File: under-bed-lighting.kicad_sch

Title: Under-bed Lighting Controller

Size: A	Date: 2026-01-23	Rev: A
KiCad E.D.A. 9.0.7		Id: 1/9

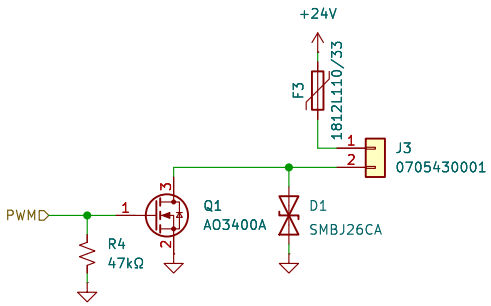

Sheet: /LED Driver1/
File: led-driver.kicad_sch

Title:

Size: A4	Date:	**Rev:**
KiCad E.D.A. 9.0.7		Id: 2/9

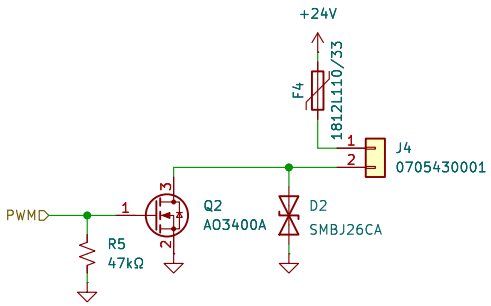

Sheet: /LED Driver2/
File: led-driver.kicad_sch

Title:

Size: A4	Date:	**Rev:**
KiCad E.D.A. 9.0.7		Id: 3/9

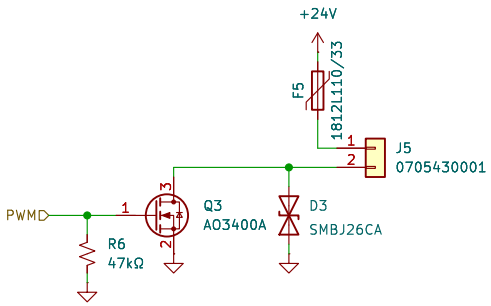

Sheet: /LED Driver3/
File: led-driver.kicad_sch

Title:

Size: A4	Date:	Rev:
KiCad E.D.A. 9.0.7		Id: 4/9

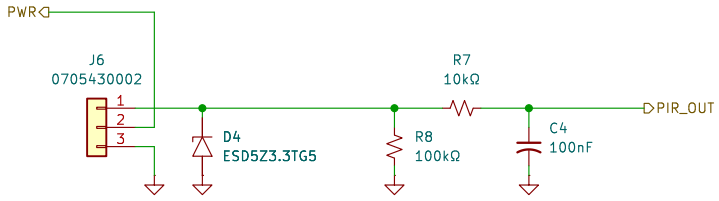

Sheet: /PIR Sensor1/
File: pir-sensor.kicad_sch

Title:

Size: A4	Date:	Rev:
KiCad E.D.A. 9.0.7		Id: 5/9

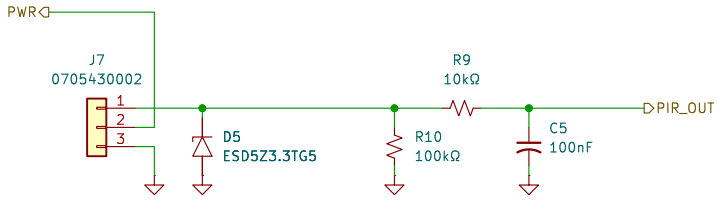

Sheet: /PIR Sensor2/
File: pir-sensor.kicad_sch

Title:

Size: A4	Date:	Rev:
KiCad E.D.A. 9.0.7		Id: 6/9

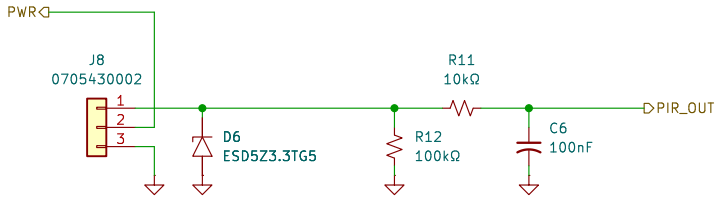

Sheet: /PIR Sensor3/
File: pir-sensor.kicad_sch

Title:

Size: A4	Date:	Rev:
KiCad E.D.A. 9.0.7		Id: 7/9

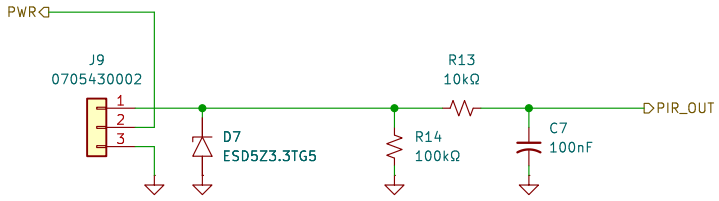

Sheet: /PIR Sensor4/
File: pir-sensor.kicad_sch

Title:

Size: A4	Date:	Rev:
KiCad E.D.A. 9.0.7		Id: 8/9

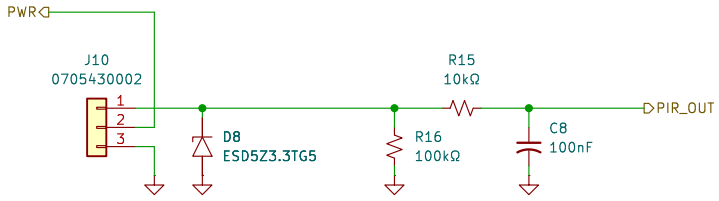

Sheet: /PIR Sensor5/
File: pir-sensor.kicad_sch

Title:

Size: A4	Date:	Rev:
KiCad E.D.A. 9.0.7		Id: 9/9