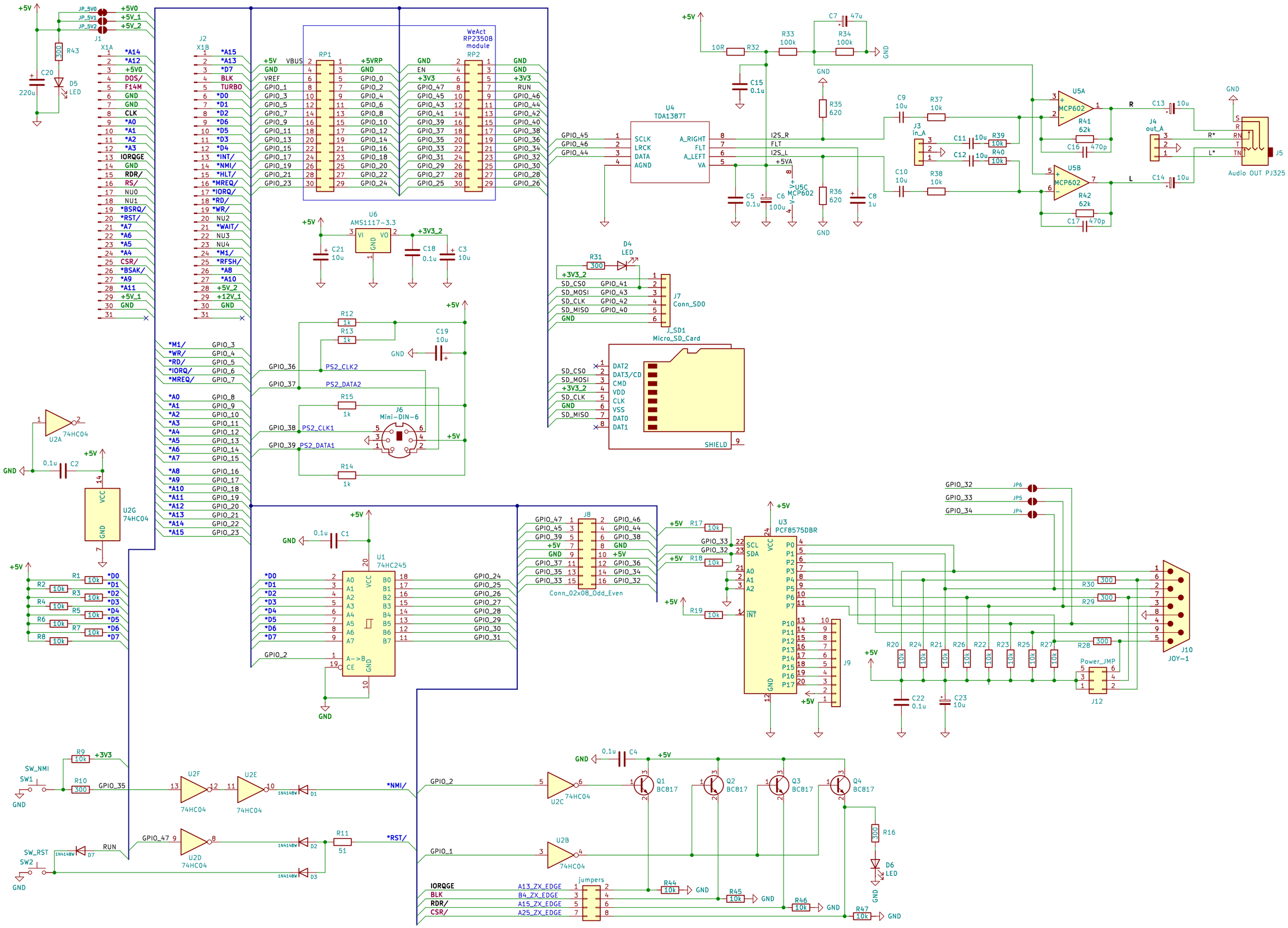
J1
X1A
J2
X1B
RP1
RP2
WeAct
RP2350B
module
U4
TDA1387T
U5A
MCP602
U5B
MCP602
U5C
MCP602
J3
in_A
J4
out_A
J5
Audio OUT PJ325
U6
AMS1117-3.3
J7
Conn_SD0
J_SD1
Micro_SD_Card
J6
Mini-DIN-6
U2A
74HC04
U2G
74HC04
U1
74HC245
J8
Conn_02x08_Odd_Even
U3
PCF8575DBR
J9
J10
JOY-1
J12
Power_JMP
U2F
74HC04
U2E
74HC04
U2D
74HC04
U2C
74HC04
U2B
74HC04
Q1
BC817
Q2
BC817
Q3
BC817
Q4
BC817
jumpers
SW_NMI
SW1
SW_RST
SW2
D4
LED
D5
LED
D6
LED