DESIGN MANUAL

FOR POLDERS IN SOUTH-WEST BANGLADESH

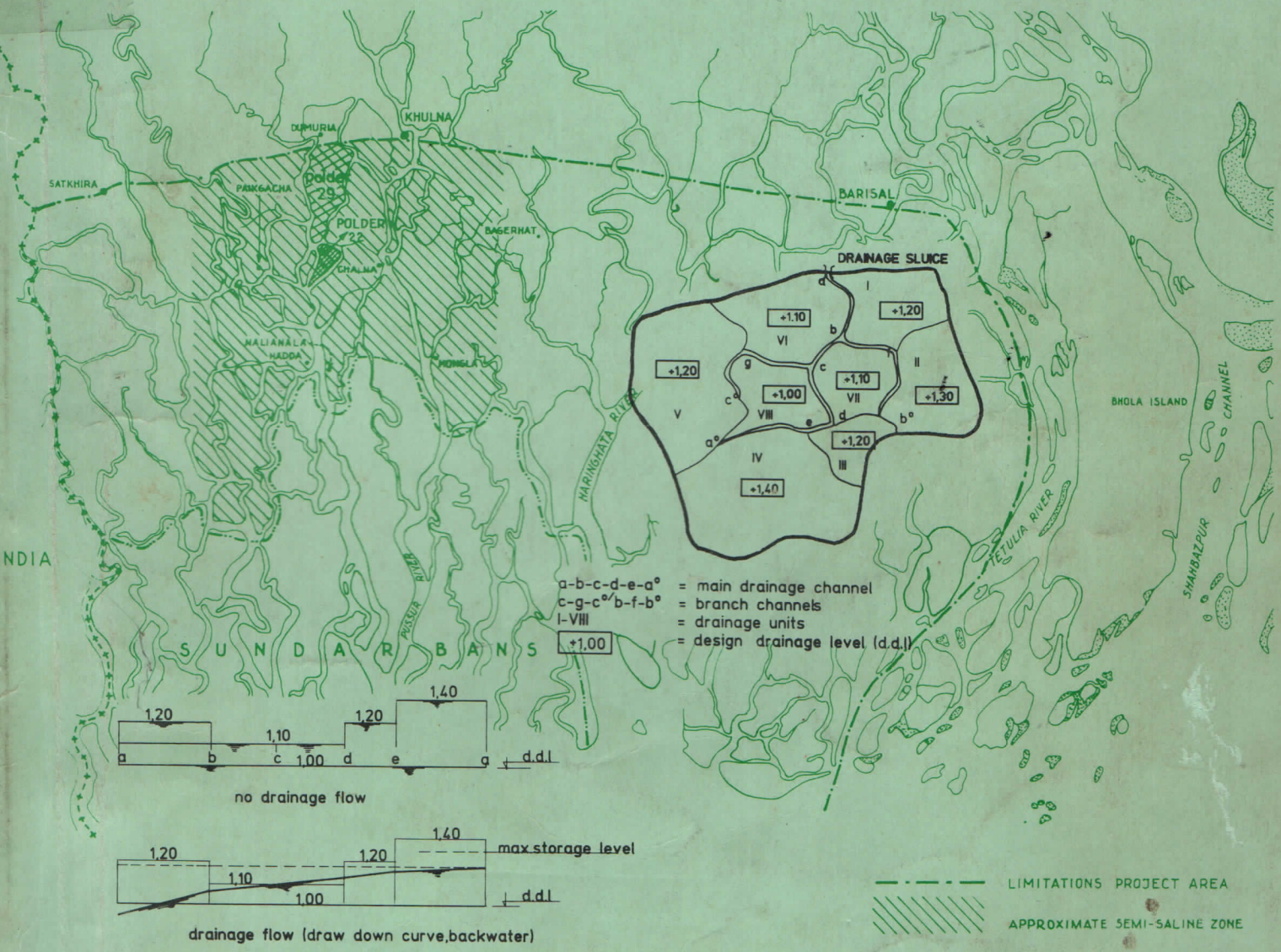

no drainage flow

drainage flow (draw down curve, backwater)

PART 2, VOL. V-VII

DELTA DEVELOPMENT PROJECT
BANGLADESH-NETHERLANDS JOINT PROGRAMME
UNDER BWDB

DHAKA
NOVEMBER 1985

DESIGN MANUAL

FOR POLDERS IN SOUTH-WEST BANGLADESH

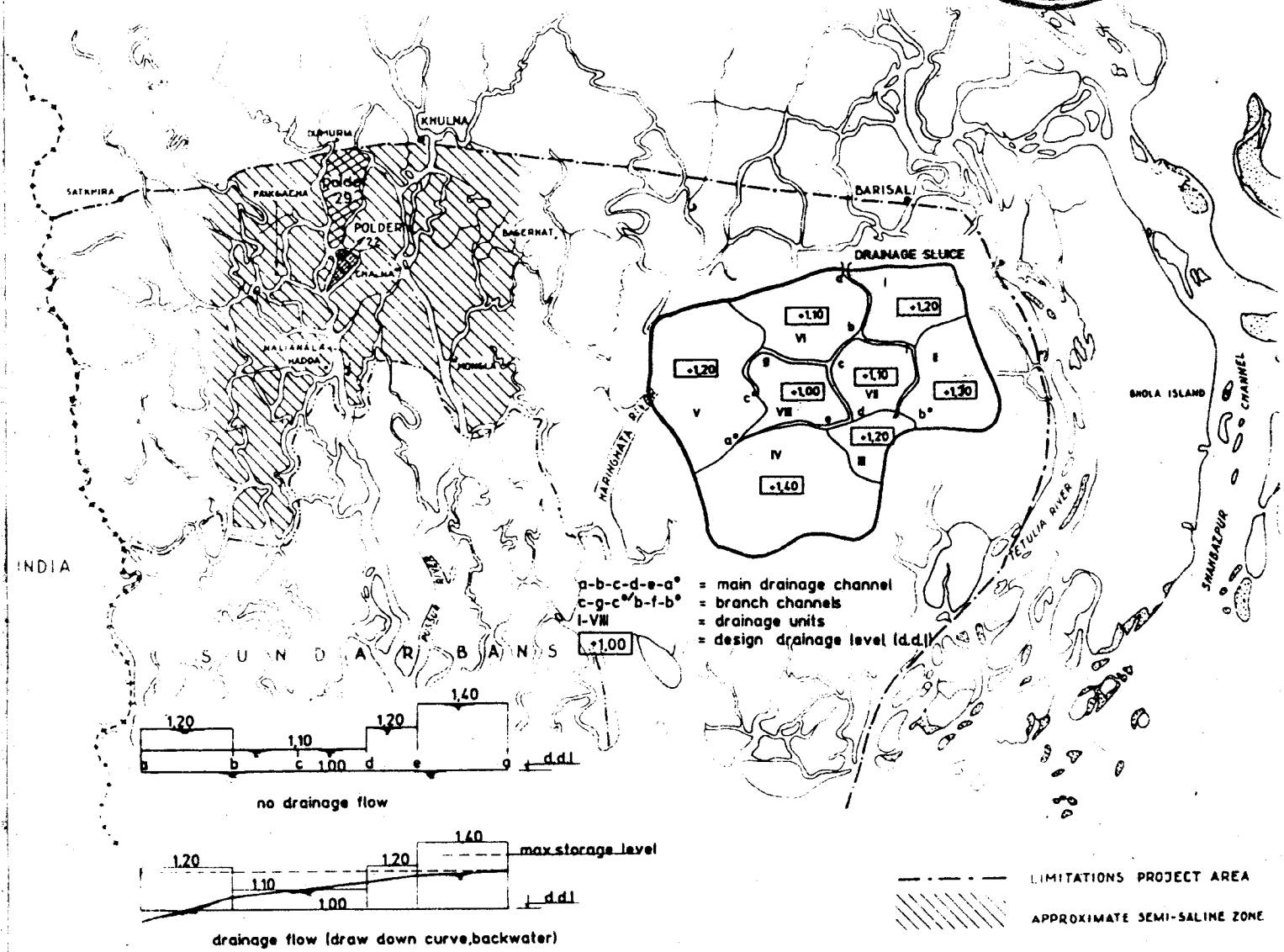

PART 2, VOL. V-VII

DELTA DEVELOPMENT PROJECT
BANGLADESH-NETHERLANDS JOINT PROGRAMME
UNDER BWDB

DHAKA
NOVEMBER 1985

THIS DESIGN MANUAL CONSISTS OF THE FOLLOWING PARTS AND VOLUMES :

PART 1

VOLUME I	INTRODUCTION AND SUMMARY OF DESIGN PROCEDURES
VOLUME II	SURVEY AND MEASUREMENTS
VOLUME III	DESIGN OF EMBANKMENTS, CLOSURE DAMS
VOLUME IV	IRRIGATION AND DRAINAGE REQUIREMENTS - DESIGN CRITERIA
ANNEX PART 1	COMMENTS ON AND REMARKS OF DESIGN CIRCLE-I

PART 2

VOLUME V	HYDRAULIC COMPUTATIONS
VOLUME VI	FOUNDATION DESIGN
VOLUME VII	GENERAL AND STRUCTURAL DESIGN ASPECTS

PART 3

VOLUME VIII	BASIC DESIGN DRAWINGS

PART 4

VOLUME IX	WORKED-OUT EXAMPLE.

DESIGN MANUAL

FOR POLDERS IN SOUTH-WEST BANGLADESH

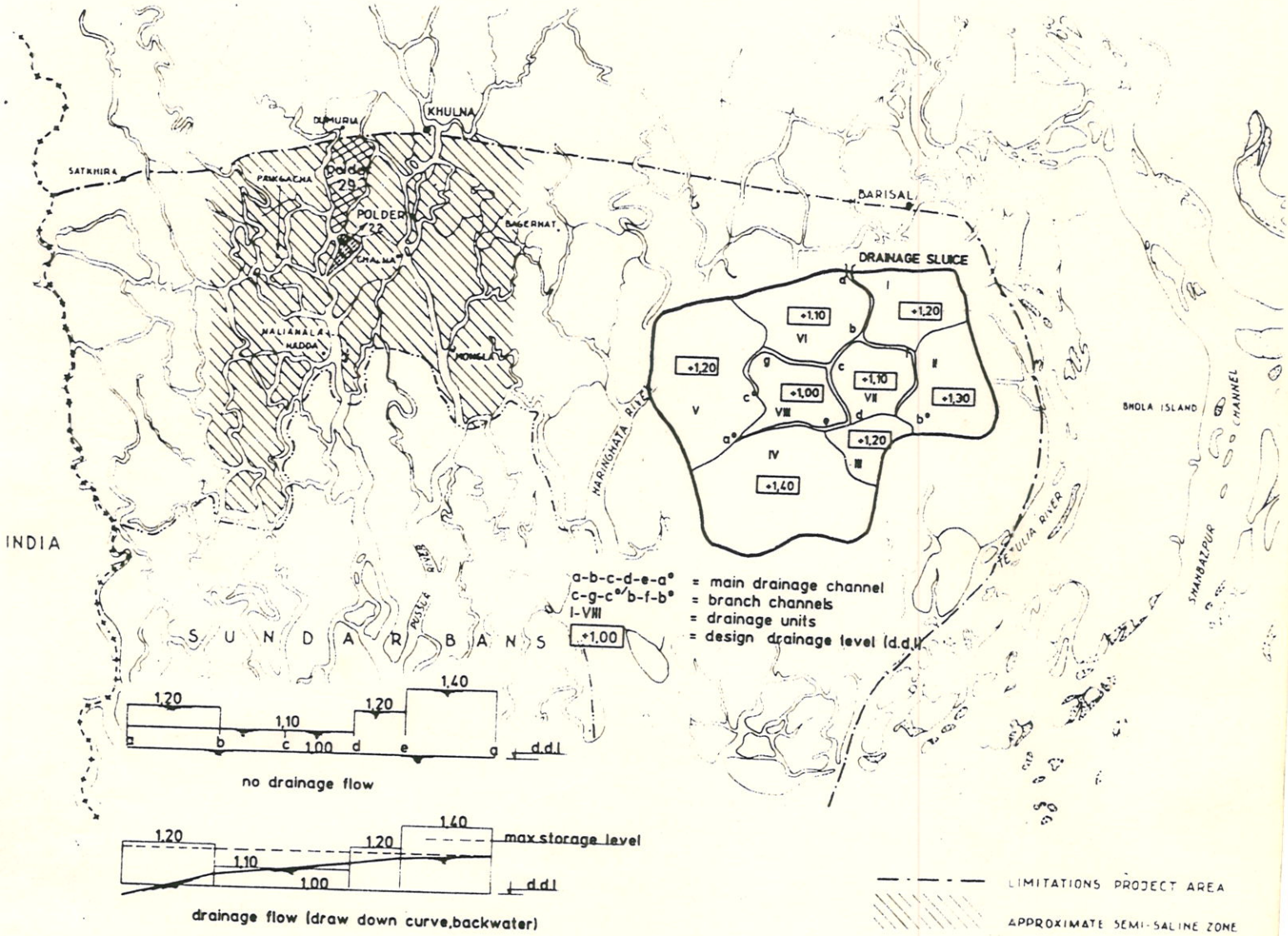

VOL. V

DELTA DEVELOPMENT PROJECT
BANGLADESH-NETHERLANDS JOINT PROGRAMME
UNDER BWDB

DHAKA
NOVEMBER 1985

UNDER WAGE
BANGLADESH-NETHERLANDS JOINT PROGRAMME
DELTA DEVELOPMENT PROJECT

DHAKA

NOVEMBER 1982

VOL. IX

DESIGN MANUAL

FOR POLDERS IN SOUTH-WEST BANGLADESH

VOLUME V HYDRAULIC COMPUTATIONS

Table of Contents

	Page
Chapter 1. Flow through natural and excavated channels	V-1
1.1 Manning formula for uniform flow	V-1
1.2 Roughness coefficient	V-2
1.3 Cross sections	V-3
1.3.1 General	V-3
1.3.2 Most efficient cross section	V-4
1.3.3 Side slopes	V-5
1.3.4 Longitudinal slopes	V-6
1.3.5 Free board	V-7
1.4 Maximum velocities	V-7
1.5 The minimum permissible velocity	V-8
1.6 Back water curves	V-9
Chapter 2. Hydraulic design of channel networks	V-12
2.1 Design of water surface levels (Step 1)	V-12
2.1.1 Drainage channels	V-12
2.1.2 Irrigation channels	V-14
2.1.3 Drainage & Irrigation	V-14
2.2 Required design discharge (Step 2)	V-15
2.3 Calculation of corresponding water level gradients (Step 3)	V-15
2.3.1 Water level gradient in drainage channels	V-16
2.3.2 Water level gradient in irrigation channels	V-16
2.3.3 Water level gradient in combined drainage + irrigation channels	V-17
2.4 Required design section, design velocity	V-18
Chapter 3. Flow through hydraulic structures	V-21
3.1 General	V-21
3.2 Short culverts	V-24
3.3 Check structures	V-25

Chapter 4. Design of Hydraulic Structures V-27

4.1 Tidal inlet structures V-27

4.1.1 Discharge capacity V-27

4.1.2 Area capacity V-29

4.1.3 Location selection V-33

4.2 Tidal drainage sluice V-36

4.2.1 Introduction V-36

4.2.2 Location selection V-38

4.2.3 Boundary conditions for water levels at the drainage sluice V-38

4.2.4 Capacity of the drainage sluice and the connecting channels V-40

4.2.5 Dimensions of the sluice, invert level V-43

4.2.6 Maximum velocities during intake of water through the drainage sluice V-54

4.2.7 Maximum velocities during drainage operations V-61

4.2.8 Drop of flow at barrel exit, stilling basin design V-64

4.2.9 Drop of flow at end of apron, baffle block design V-71

4.2.10 Choise of solution V-76

Chapter 5. Bottom and slope protection at hydraulic structures V-78

ANNEX V - 1 MANNING'S ROUGHNESS COEFFICIENTS (n) V-80

ANNEX V - 2 NOMOGRAPH FOR MANNING'S FORMULA V-82

ANNEX V - 3 a) CALCULATION OF BACKWATER CURVE IN THE MAIN DRAINAGE CHANNEL V-91

b) DELIVERY CURVES FOR THE DRAINAGE CHANNEL V-96

c) WATER LEVELS DURING DRAINAGE PERIOD V-97

d) FLOOD ROUTING FOR THE DRAINAGE SLUICE V-100

ANNEX V - 4 ENERGY LOSSES V-112

REFERENCES V-115

VOLUME V HYDRAULIC COMPUTATIONS

Chapter 1. Flow through natural and excavated channels

1.1 Manning formula for uniform flow

The flow through channels and pipes depends on the hydraulic gradient (the driving force) and the friction losses which depend on the wall roughness and the dimensions of the channel. The best known and most widely used formula for uniform flow is the Manning formula. It is very suitable for use with pocket calculators that are provided with exponential functions.

$$v = \frac{1}{n} \cdot R^{2/3} \cdot S^{\frac{1}{2}} \quad \text{(for the metric system)}$$

$$v = \frac{1.49}{n} \cdot R^{2/3} \cdot S^{\frac{1}{2}} \quad \text{(for foot-units)}$$

In this manual the metric system will be adhered.

v = average velocity (m/s)

n = Manning's roughness coefficient ($s/m^{1/3}$)

R = hydraulic radius of the cross-section (m).
R is equal to cross-sectional area A divided by wetted perimeter O.

S = energy loss or hydraulic gradient.

Sometimes the roughness coefficient k of Strickler is used; the relation between n and k is : $\frac{1}{n} = k$

The discharge of uniform flow in a channel or pipe may be expressed as :

$$Q = v.A \quad \text{or,}$$

$$Q = \frac{1}{n} \cdot R^{2/3} \cdot A \cdot S^{\frac{1}{2}}$$

wherein Q = discharge (m^3/s)

A = cross-sectional area of flow (m^2)

1.2 Roughness coefficient

The n-value depends on a number of factors, viz. roughness of bed and side slopes, vegetation, channel irregularity and alignment, hydraulic radius, and obstructions in the channel. Values for the roughness coefficient are given in ANNEX V - 1. For more details reference is made to Ven te Chow (ref. 2).

Cowan (1956) recognized that several factors were affecting the n-value and he proposed that the n-value be computed with :

$$n = (n_o + n_1 + n_2 + n_3 + n_4)\, m_5$$

This method can be applied to drainage channels with a hydraulic radius of less than 4.50 m. The proper values of n_o to n_4 and m_5 for the given conditions can be obtained from Table V-1.1.

Table V - 1.1 Channel characteristics and corresponding n-values

Channel condition		n-values
material involved	earth	n_o=0.020
Degree of irregularity of cross-section (sand bars, eroding shores, holes and bumbs)	Smooth	n_1=0.000
	Minor	0.005
	Moderate	0.010
	Severe	0.020
Variations of channel cross section (shallow-wide to deep-narrow)	Gradual	n_2=0.000
	Alternating occasionally	0.005
	Alternating frequently	0.010-0.015
Relative effect of obstructions like trees, nets, screens, sills	Negligible	n_3=0.000
	Minor	0.010-0.015
	Appreciable	0.020-0.030
	Severe	0.040-0.060
Vegetation	Low	n_4=0.005-0.010
	Medium	0.010-0.025
	High	0.025-0.050
	Very high	0.050-0.100

Table V - 1.1 Channel characteristics and corresponding n-values (continued)

Channel condition		n-values
Degree of meandering	Minor	m_5=1.000
	Appreciable	1.150
	Severe	1.300

It is no easy matter to decide which n-value to select in a given situation and some field experience is required before an n - value can be estimated.

For natural channels in the Bangladesh delta area an n-value of around 0.035 is commonly used.

1.3 Cross sections

1.3.1 General

Most drainage and irrigation channels have a trapezoidal cross-section or have a profile which can be approximated by a trapezoidal section.

The geometry of the trapezoidal cross-section can be described by : (see Figure V - 1.1).

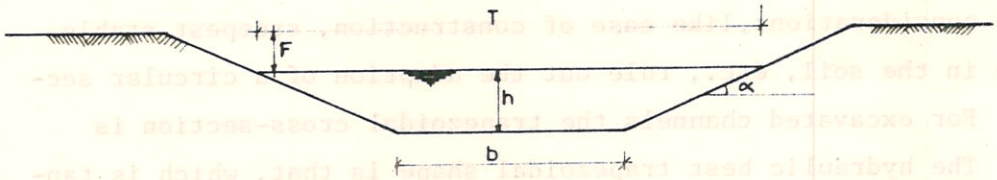

Figure V - 1.1 Trapezoidal channel cross-section.

area : $A = h\ (b + z.h)$

wet circumference : $0 = b + 2h\sqrt{1 + z^2}$

hydraulic radius : $R = \frac{A}{0}$

in which : b = bottom width

h = water depth

α = side slope angle

z = cotan α = side slope

T = topwidth = $b + 2\ zh$

In most cases an existing natural channel will be used for drainage and/or irrigation purposes. The cross-sections are measured in the field. From the plotted cross-sections the cross-sectional area A and the wetted perimeter 0 can be measured and the hydraulic radius $R = \frac{A}{0}$ can be computed. With the Manning formula it should be checked if the existing cross-section is sufficient or has to be enlarged. The matter is further elaborated in Chapter 2 of this Volume.

If a new channel has to be made or an existing channel has to be enlarged, aspects as mentioned in the following paragraphs have to be taken into consideration.

1.3.2 Most efficient cross-section

The most efficient cross-section is to be determined considering not only hydraulic but also economic and practical aspects. For a channel having a given roughness n and slope S, which has to carry a certain discharge Q, the best hydraulic section is the section that gives the minimum area A. The best of all possible sections is the circle, or, for channels, the semi-circle. However, practical considerations,like ease of construction, steepest stable slope in the soil, etc., rule out the adaption of a circular section. For excavated channels the trapezoidal cross-section is used. The hydraulic best trapezoidal shape is that, which is tangent to a semi-circle; this is half of a hexagon. For other side slopes, it can be shown that the best hydraulic trapezoidal shape is a trapezoid which is tangent to a semi-circle having its centre on the water surface (see Figure V - 1.2).

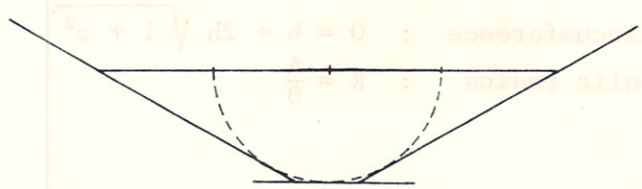

Figure V - 1.2 Channel section of optimal shape.

This means that the ratio of the bottom width b and the water depth h should follow the equation

$$\frac{b}{h} = 2\left(\sqrt{z^2 + 1} - z\right) \qquad (z = \text{cotan}\,\alpha\ ;\ \alpha = \text{side slope}).$$

For a side slope z is 1, 1.5 and 2 this ratio for the best hydraulic trapezoidal cross-section equals 0.83, 0.61 and 0.47 respectively.

The best hydraulic section, however is not always the most economic cross-section. The area A is only the cross-sectional area of flow, the total volume of excavation includes over-excavation for free-board as well and so a minimum value of A need not imply a minimum total excavation. Moreover, considerations such as ease of access and disposal of excavated earth may be more important.

A deep cross-section gives more risk of collapsing side slopes and with variations in the discharge the fluctuations in the water depth are greater.

For the hand-dug canals the most economic cross-section will have a $\frac{b}{h}$ ratio which will be higher than that of the best hydraulic section. Also in low lying areas with high ground water tables the $\frac{b}{h}$ ratio will increase. For drainage channels in these areas the following $\frac{b}{h}$ value as used in the Netherlands are recommended :

b/h	= 1	for $h < 0.50$ m
b/h	= 2	for $0.5 < h < 0.75$ m
b/h	= 2.5	for 0.75 m $< h < 1.0$ m
b/h	= 3	for $h > 1.0$ m

1.3.3 Side slopes

Steep slopes give minimum land loss but run the risk of collapsing, especially after heavy rainfall or in case of a sudden lowering of the water table of the channel. The side slopes of a canal depend mainly on the kind of material. Table V-1.2 gives a general idea of the suitable side slopes for channels built in various kinds of materials.

Table V - 1.2 : Suitable side slopes

Material	side slopes (vertical/horizontal)
Muck and peat soil	4:1
Stiff clay or earth with concrete lining	2:1 to 1:1
Earth with stone lining or earth for large channels	1:1
Firm clay or earth for small ditches	1:1½
Loose sandy earth	1:2
Sandy loam or porous clay	1:3

1.3.4 Longitudinal slopes

The longitudinal or bottom slope is generally governed by the topography and the energy head available for the flow of water. This will be further elaborated in Chapter 2.

Figure V - 1.3 presents the definitions.

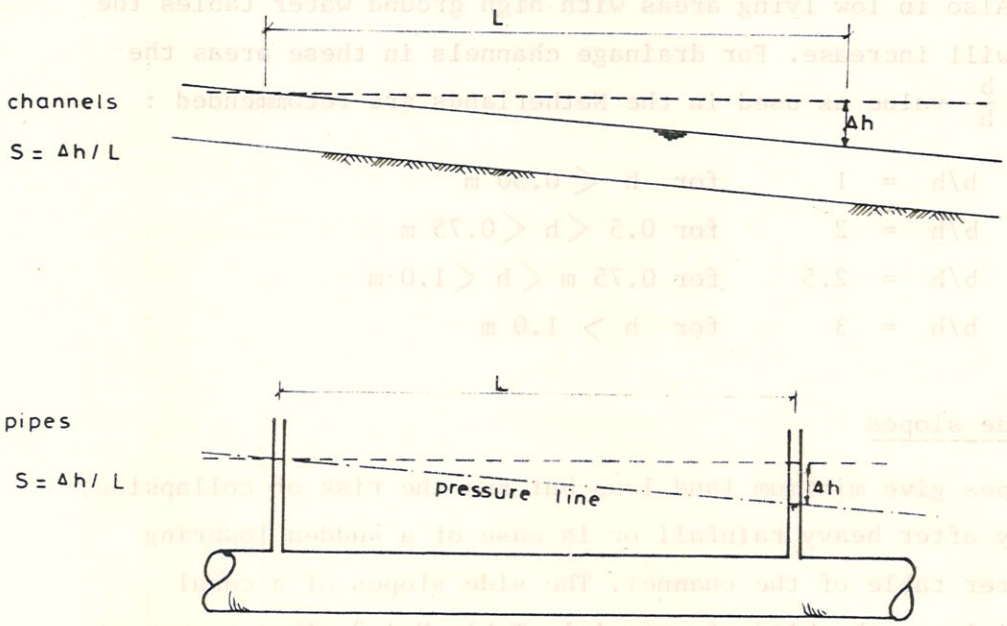

Figure V - 1.3 Hydraulic gradients for channels and pipes.

1.3.5 Free board

The free board (F) of a channel is the vertical distance between the top of the channel embankment and the water surface at the design level. (see Figure V - 1.1). This distance should be sufficient to prevent waves from overtopping the sides. Generally larger freeboards are recommended for canals carrying larger discharges. The following freeboards are recommended for irrigation channels :

Q, (m^3/s)	<0.75	0.75 - 1.5	1.5 - 85
F (m)	0.45	0.60	0.75

These are somewhat less than the freeboard as recommended by the U.S. Bureau of Reclamation:

$$F = C\sqrt{h}$$

in which C = 0.8 for channels upto 0.5 m^3/s, further increasing to 1.35 for channels of 80 m^3/s capacity.

In case of irrigation of rice only, the freeboard can even be reduced more, especially for the smaller channels, because the damage due to overtopping or flooding in case of a breach is less severe. For the low and flat deltaic areas a freeboard of only 0.25 m is suggested for the smaller channels.

1.4 Maximum velocities

Although hardly applicable in the deltaic area it may be mentioned that too high velocities may cause erosion of the channel slopes. The maximum permissible velocities recommended by the American Society of Civil Engineering for straight earthen canals of small slopes and after aging, are given in Table V - 1.3.

Table V - 1.3 Maximum permissible non-eroding velocity (m/s)

Material	Clean water	Water transporting colloidal material
Fine sand, non-colloidal	0.45	0.70
Sandy loam, non-colloidal	0.55	0.70
Silt loam, non-colloidal	0.60	0.90
Alluvial silts, non-colloidal	0.60	1.05
Ordinary firm loam	0.70	1.05
Stiff clay, very colloidal	1.15	1.50
alluvial silt, colloidal	1.15	1.50

In winding channels; the maximum non-eroding velocities are lower; the following reductions are proposed:

slightly winding	5%
moderately winding	13%
strongly winding	22%

If side slopes are protected by vegetal cover, higher maximum velocities are permitted, see Table V - 1.4.

Table V - 1.4 : Permissible velocities (m/s) for channels lined with grass

Cover	side slope range %	erosion resistant soils	easily eroded soils
Bermuda grass	0-5	2.4	1.8
	5-10	2.1	1.5
Annuals	0-5	1.0	0.7

1.5 The minimum permissible velocity

The minimum permissible velocity, or the non-silting velocity, is the lowest velocity that will not induce sedimentation. Its exact value cannot be easily determined.

Since in the deltaic area the hydraulic gradient varies with the

fluctuating water levels outside and inside the polders, it is practically not possible to apply the minimum permissible velocity in the hydraulic design of an irrigation or drainage system in these areas.

For completion sake some formulas are mentioned below :

Kennedy formula : $v_{min} = C.\ h^{0.64}$

in which v_{min} = minimum permissible velocity (m/s)

h = water depth channel (m)

C = coefficient which varies according to the nature of the suspended material (see Table V - 1.5).

Table V - 1.5 Values of C in Kennedy's formula

Nature of suspended material	C
Light loams or very fine sand	0.40
Medium sand (0.4 mm diameter)	0.55

Steevenz formula : $v_{min} = 0.41\ Q^{0.225}$ in which Q is capacity of irrigation canal in m^3/s.

Lacey formulas : $\frac{A}{R} = 4.8\sqrt{Q}$, and $S_{min} = 0.00031\ \frac{f^{5/3}}{Q^{1/6}}$

in which f is a silt factor for which Lacey introduced the relation $f = 12.75\sqrt{d}$ where d is the diameter in centimeters of the predominant type of sediment transported.

1.6 Back water curves

If the flow in a channel is obstructed by a weir, a culvert or another structure, the water surface upstream is raised over a certain distance in the so-called backwater curve (see Figure V - 1.4). For a regular canal with uniform slope S the backwater curve can be approached by the empirical parabolic relationship :

$$\Delta_x = \frac{[(x.S) - 2.\Delta_o]^2}{4\Delta_o} \quad \text{or} \quad \frac{\Delta_x}{h} = \frac{[\ (x.S/h) - (2\Delta_o/h)\ ]^2}{4\Delta_o/h}$$

in which : x = distance upstream, (m)

Δ_x = raise in water level at distance x, (m)

Δ_o = raise in water level at distance x = o, (m)

S = bottom slope,

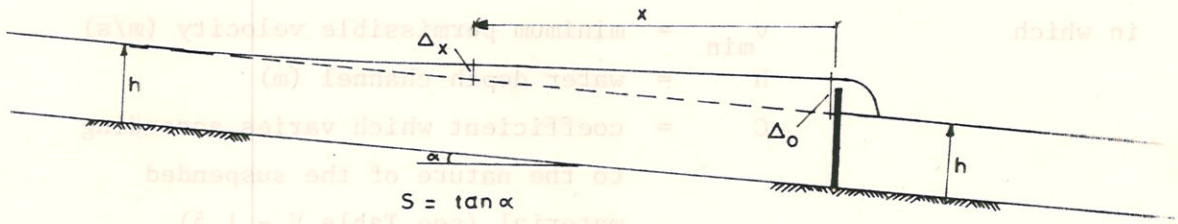

Figure V - 1.4 Backwater curve.

At the distance $x = 2\Delta_o/S$ the backwater effect (raise in water level Δ_x) is zero.

More accurate determinations can be made with the nomograph based on the simplified (van Smaalen) Bakhmeteff method (see Figure V - 1.5).

For larger streams, like the main drainage channel towards a sluice, the backwater curve may be approximated by :

$$\Delta_x = \Delta_o . \ e^{-3.\ S.\ x/h_n}$$

in which h_n is the normal depth belonging to a certain discharge Q and bottom (and parallel energy) slope S.

The latter approximation should only be used in cases where the backwater effect is not more than 10% of the waterdepth. Table V - 1.6 gives a comparison of the different methods to approximate backwater curves.

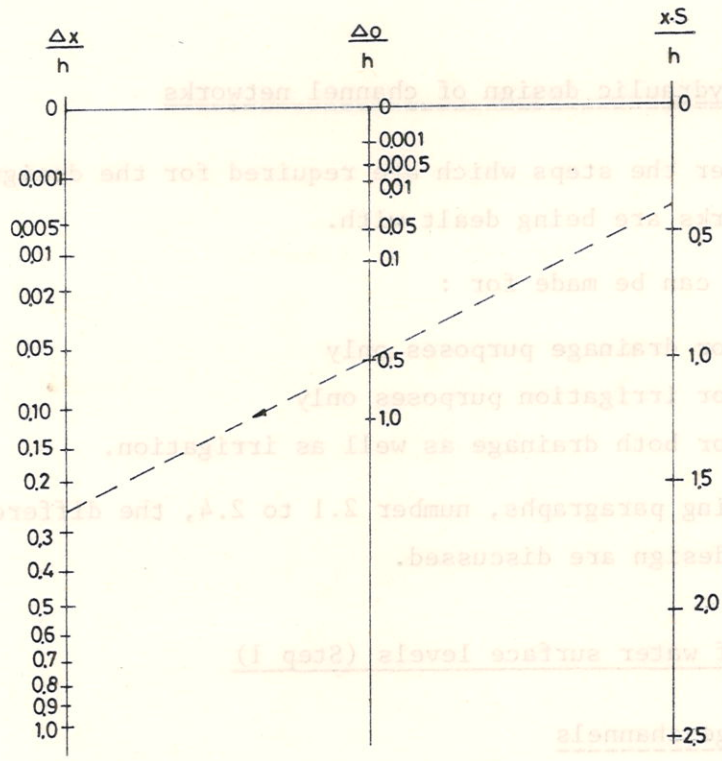

backwater curve $\left(\frac{\Delta_x}{h}\right)^{0,315} = \left(\frac{\Delta_o}{h}\right)^{0,315} - 0,408\frac{x \cdot S}{h}$

Figure V - 1.5 Nomograph for determination of backwater curves in a canal section according to van Smaalen-Bakhmeteff (approximation).

Table V - 1.6 : Comparison of backwater formula's

Example :

S = 0.002; h = 1.0 m; Δ_o= 0.5 m.

x (m)		10	50	100	200	500
Δ_x	parabolic	0.48	0.40	0.32	0.18	0
Δ_x	nomograph	0.48	0.44	0.37	0.25	0.055
Δ_x	exponential	0.47	0.37	0.27	0.15	0.02

Chapter 2. Hydraulic design of channel networks

In this chapter the steps which are required for the design of channel networks are being dealt with.

A distinction can be made for :

- channels for drainage purposes only
- channels for irrigation purposes only
- channels for both drainage as well as irrigation.

In the following paragraphs, number 2.1 to 2.4, the different steps of the design are discussed.

2.1 Design of water surface levels (Step 1)

2.1.1 Drainage channels

The critical period is the monsoon period when rice is the predominant crop. In general the design water levels in the drainage channels correspond with the average ground levels. (actually the drainage water level in a certain period = groundlevel + required waterdepth in the paddy field in that period).

This drainage level has to be maintained in the whole drainage unit. For larger polders, several drainage units of which each has its specific design drainage level may be designed.

All drainage units will drain the excess water into the main drainage channel(s), either direct via an open connection or via a regulating structure. (check with stop logs or fall-boards).

The main drainage channel(s) will convey the excess water to the sluice. In the situation that no drainage is necessary the water level in the main drainage channel corresponds with the design drainage level of the lowest drainage unit in the polder. During drainage of excess water through the drainage sluice, the water level in the main drainage channel will assume a gradient, depending on the amount of discharge conveyed.

The matter is illustrated in Figure V - 2.1.

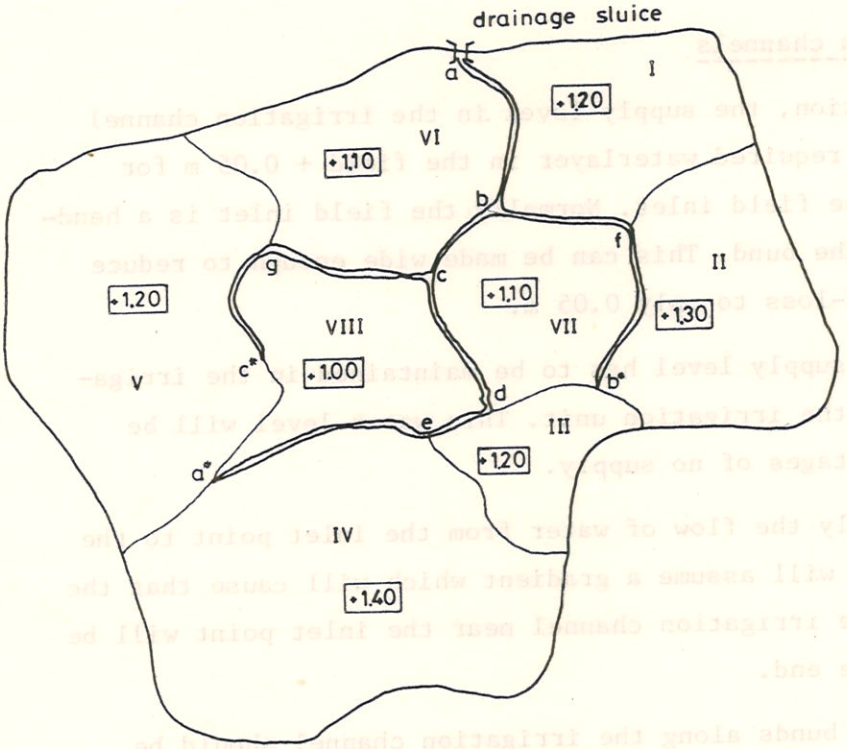

a-b-c-d-e-a* = main drainage channel
c-g-c*/ b-f-b* = branch channels
I.....VIII = drainage units
+1.00 = design drainage level (d.d.l.)

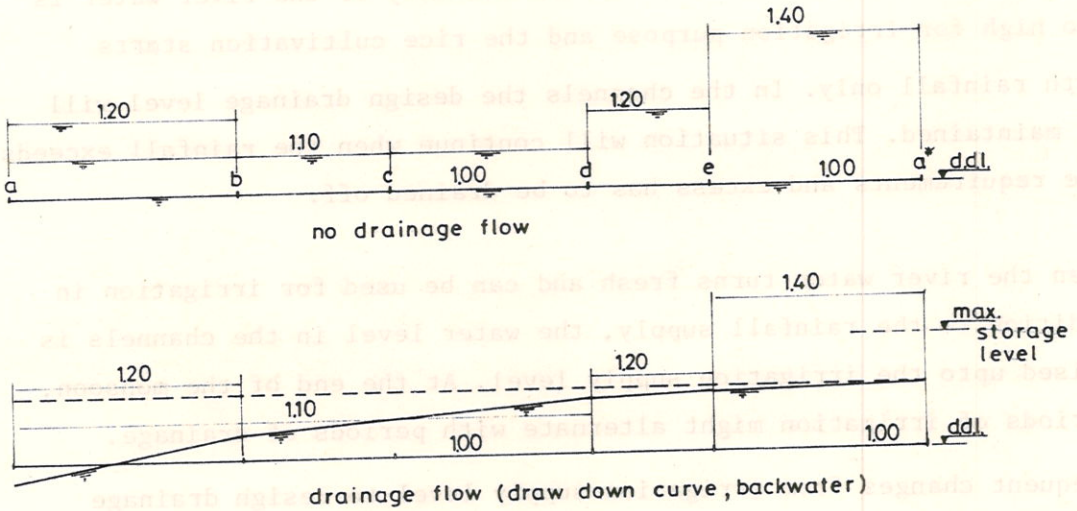

Figure V - 2.1 Design drainage level

2.1.2 Irrigation channels

For rice cultivation, the supply level in the irrigation channel is groundlevel + required waterlayer in the field + 0.05 m for head losses in the field inlet. Normally the field inlet is a hand-made opening in the bund. This can be made wide enough to reduce the required head-loss to only 0.05 m.

The design water supply level has to be maintained in the irrigation channels of the irrigation unit. This water level will be constant during stages of no supply.

In stages of supply the flow of water from the inlet point to the farest away field will assume a gradient which will cause that the water level in the irrigation channel near the inlet point will be higher than at the end.

The height of the bunds along the irrigation channel should be calculated considering this gradient.

2.1.3 Drainage + irrigation

In case the same channels are used for both drainage and irrigation, we can distinguish two water levels.

In the first part of the monsoon the salinity of the river water is too high for irrigation purpose and the rice cultivation starts with rainfall only. In the channels the design drainage level will be maintained. This situation will continue when the rainfall exceeds the requirements and excess has to be drained off.

When the river water turns fresh and can be used for irrigation in addition to the rainfall supply, the water level in the channels is raised upto the irrigation supply level. At the end of the monsoon, periods of irrigation might alternate with periods of drainage.

Frequent changes from irrigation supply level to design drainage level may be required. In areas with only small differences in ground elevation and thus small differences in irrigation supply level of the highest units and design drainage level of the lower

units, this could be managable.

However, in areas with more pronounced differences this is only possible if sufficient check structures are available to control the water level changes in the units and in different sections of the (main) channel(s).

In general the dimension of the cross-sections of the channels are determined by the drainage requirements (see also paragraph 2.4). In some stretches along the channels bunds have to be made or raised to prevent flooding of the lower areas during stages when irrigation supply level is to be maintained.

2.2 Required design discharge (Step 2.)

The drainage and irrigation channels first have to be divided into sections with uniform bottom slopes and discharges of the channels. Then the required design discharge is determined for every section. Therefore the area which is drained or supplied via this channel-section is multiplied with the drainage criteria (see Volume IV, Chapter 2) or the irrigation criteria (see Volume IV, Chapter 3). These are expressed in mm/day. To convert the discharge into m^3/s use the conversion factors 1 mm/ha = 10 m^3 and 1 day = 86400 sec.

2.3 Calculation of corresponding water level gradients (Step 3.)

This is done by making use of the longitudinal sections of the channel network. Besides the levels as discussed above, the additional losses for structures in the channel, such as culverts, checks, has to be taken into account.

In principle the hydraulic gradient should correspond with the natural ground slope as closely as possible to prevent extra excavation or fill. Small gradients will result in relatively large cross-sections and steeper slopes may result in larger areas that can not be irrigated by gravity.

In general the minimum slope should not be less than 5×10^{-5} (5 cm/km) for the larger canals. For smaller channels normally steeper slopes are used.

2.3.1 Water level gradient in drainage channels

For the calculation of the water level gradient in the drainage channels the criteria is the drainage level at the end of the drainage channel, farest away from the drainage sluice (at points a*, b* and c* in Figure V - 2.1). The drainage level at this point may vary between the design drainage level (+ 1.00) and the maximum allowable storage level (+ 1.30).

At the point where the drainage level is critical the water level gradient is calculated in downstream direction, taking account of changes in discharges, flow-profiles and any regulating structures. The calculation is carried out with the help of the backwater formulas presented in Chapter 1.6 herefore. Profiles of the drainage channels have to be adopted if the calculations should indicate excessive draw-down effects resulting in too low down stream water levels.

In this way the water level gradient and water levels of the complete system during maximum drainage conditions and average drainage conditions are calculated, i.e. starting value at a* at + 1.30 m and ½ (1.30 + 1.00)=+ 1.15 m. An example of such a calculation is presented in ANNEX V - 3.

The relation between various discharges and various water levels in the drainage channel near the sluice (H_x) and at the upstream end (H_i) are given in the delivery curve for the drainage channel as determined according to ANNEX V - 3.

2.3.2 Water level gradient in irrigation channels

In general the hydraulic gradient is determined by the principle that the irrigation water has to reach the farest and the highest areas in the irrigation unit at the required supply level. From this required supply level at the farest end of the channel the gradients and water levels are calculated towards the inlet point.

To rise the water levels check structures may be used (see Figure V - 2.2).

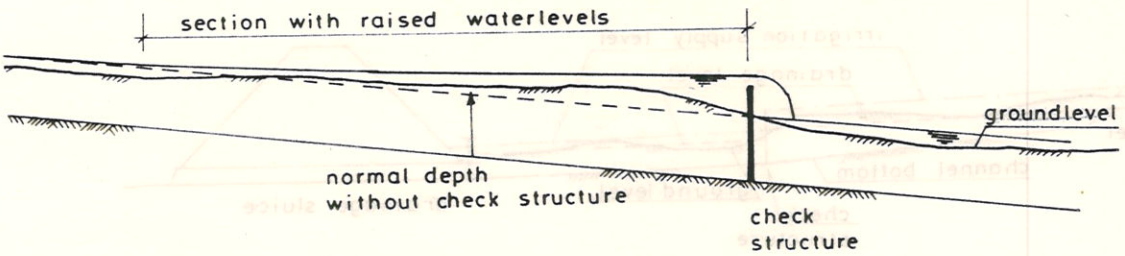

Figure V - 2.2 Check structure raising water levels.

2.3.3 Water level gradients in combined drainage + irrigation channels

In the longitudinal section the water levels and hydraulic gradients for both the drainage as well for the irrigation situation are plotted. For relatively flat areas with a regular slope this will pose no problem and can be achieved by regulating the irriga- inlet and drainage sluices only (see Figure V - 2.3).

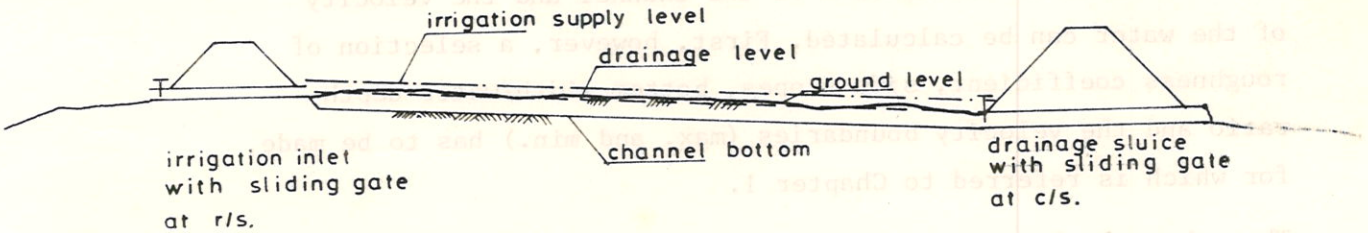

Figure V - 2.3 Hydraulic gradients in case of regular ground slope.

It should be mentioned that this figure and the following figure should be seen in relation with the general lay-out of the drainage/irrigation system as discussed in Volume IV, Chapter 6. An irrigation inlet generally serves only part of the drainage unit and is not located diametrical opposite the drainage sluice.

In case there is no regular slope, check structures may be required to maintain the irrigation supply levels in the higher

parts during the irrigation period (see Figure V - 2.4).

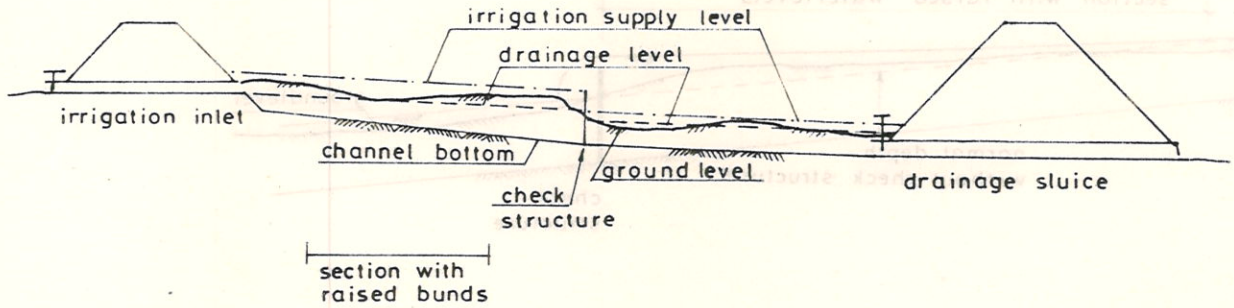

Figure V - 2.4 Hydraulic gradients in case of irregular ground slope.

This check structure should be of a regulating type (see Chapter 3.3) that can be opened or has a weir crest that can be lowered in order to have a drainage flow with a lower water level in the period that drainage is required.

2.4 Required design section, design velocity (Step 4.)

From the determined design discharge (see previous paragraph), the dimensions of the section of the channel and the velocity of the water can be calculated. First, however, a selection of roughness coefficient, side slopes, bottom width/water depth ratio and the velocity boundaries (max. and min.) has to be made, for which is referred to Chapter 1.

Then the calculation of the section and velocity can continue, using :

- nomographs in case of regular cross-sections (see ANNEX V - 2)

- calculator in case of natural channels with irregular cross-sections.

In case of a drainage cum irrigation channel the dimensions are in general determined by the drainage flow because the drainage criteria are much higher than the irrigation requirements and the water level of the drainage flow is lower than the irrigation flow, resulting in a smaller cross-sectional area. Only in the most up-

stream part, the irrigation flow is the determinant flow. If applicable, check the calculated velocities against minimum and maximum velocity values; if v is too high, reduce the hydraulic gradient and corresponding bottom slope. The gain in head should preferably be used in upstream and downstream sections. If this is not possible it must be absorbed by drop structures. Finally the required freeboard has to be considered for the determination of the crest level of the embankment or bunds along an irrigation channel.

TYPE:

1. Outlet Submerged

$h_1 > d$

$h_2 > d$ full flow

2. Outlet Unsubmerged

$h_1 > h^*$

$h_2 < d$ full flow (only for $\frac{L}{d} > \approx 20$, see figure V-3.2)

3. Outlet Unsubmerged

$h_1 > h^*$

$h_2 < d$ partly full

4. Outlet Unsubmerged

$h_1 < h^*$

$h_2 > h_{cr}$ subcritical flow

5. Outlet Unsubmerged

$h_1 < h^*$

$h_2 < h_{cr}$ subcritical flow control at outlet

6. Outlet Unsubmerged

$h_1 < h^*$

$h_2 < h_{cr}$ supercritical flow controle at entrance (for chutes and long pipes)

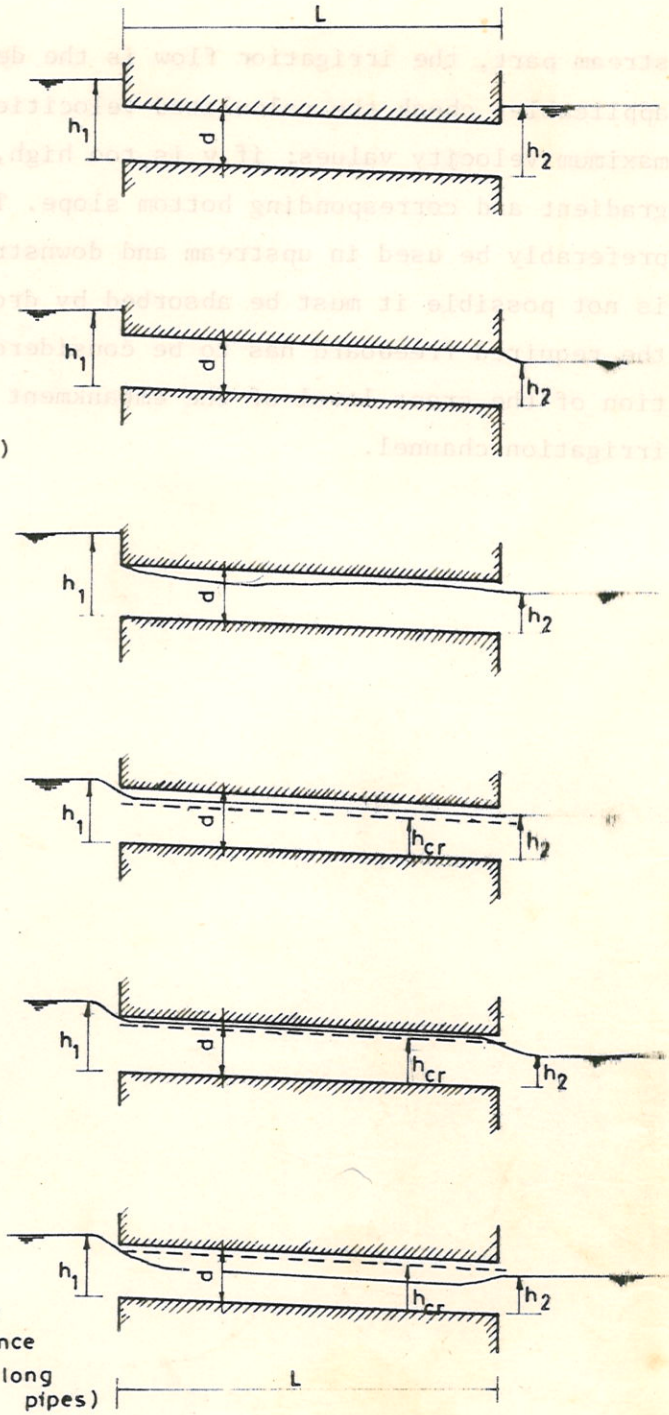

h_{cr} = critical depth

$h^* = 1.2$ to $1.5\,d$

Figure V - 3.1 Types of culvert flow.

Chapter 3. Flow through hydraulic structures

3.1 General

The flow through a hydraulic structure, a culvert, or a regulator, may be classified into six types of flow as indicated in Figure V - 3.1 (ref. 2).

The identification of the six flow types may be explained according to the following outlines :

A. Outlet submerged : Type 1

B. Outlet unsubmerbed:

1. Headwater greater than the critical value,
   - a. culvert hydraulically long: Type 2
   - b. culvert hydraulically short: Type 3
2. Headwater less than the critical value,
   - a. Tailwater higher than the critical depth: Type 4
   - b. Tailwater lower than the critical depth:
     - slope subcritical: Type 5
     - slope supercritical: Type 6

For the determination of a certain flow condition through a structure, the following considerations have to be made.

- A culvert will flow full if the outlet is submerged, or, when the headwater is high and the barrel is long.
- The entrance of a culvert will be submerged if the headwater h_1 is more than a critical value $h^* = 1.5$ d, wherein d is the culvert height. Computations have shown that greater accuracy could be obtained by assuming the entrance was not submerged, in case submergence was uncertain (for instance, assuming $h^* = 1.2$ d). Whether a barrel is hydraulically long or short can be determined with the help of Figure V - 3.2.

The discharge for each type of flow can be derived from the basic orifice and weir formula.

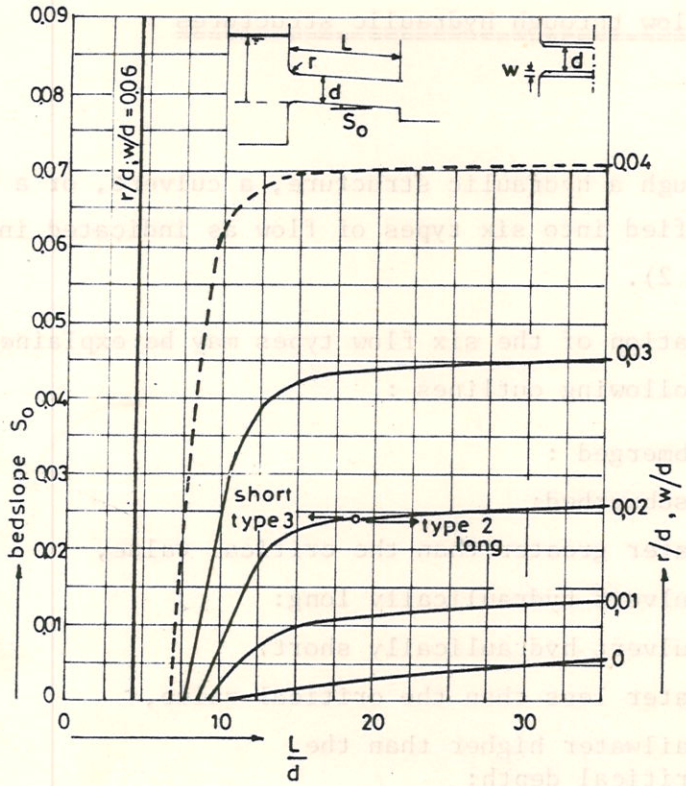

Figure V - 3.2 Criteria for hydraulically short and long box and pipe culverts with concrete barrels and square, rounded or beveled flush entrances from a vertical headwall, either with or without wingwalls. (U.S. Geological Survey, No. 376, 1957).

$$Q = C.A.\sqrt{2g.\ \Delta H}$$

in which Q = discharge in m^3/s

C = coefficient

A = cross section area in m^2

g = gravity acceleration = 9.8 m/s^2

ΔH = energy head loss in m.

In the following Table V - 3.1, the discharges formulas for the six flow conditions are summarized.

Table V - 3.1 Discharge formula

flow condition	discharge	remarks (see also Annex V - IV on energy losses)
Type 1 and Type 2	$Q = C_1 . A . \sqrt{2g . \Delta H}$	for square cornered entrance and outlets: $C_1 = \sqrt{\frac{1}{1.5 + \frac{2.L.n^2.g}{R^{4/3}}}}$
Type 3	$Q = C_3 . A_b . \sqrt{2g . H_1}$	C_3 = (see Figure V - 3.3 and note 1*)
Type 4	$Q = C_4 . b . h_2 . \sqrt{2g(h_1 - h_2)}$	Only if $h_2 > h_{cr}$ $h_{cr} = \sqrt[3]{\frac{q^2}{g}}$ If $h_2 \leqslant h_{cr}$, then type 5 flow C_4 = 0.82 for square entrances
Type 5 and Type 6	$Q = 1.353 \times b \times (h_1)^{3/2}$	for square entrance

Note: 1*) : The main difference with flow type 1 - formula, is the neglection of friction losses in this case.

b = width of barrel (m)

h_1 = headwater above invert level (m)

E_1 = energy head of headwater above invert level (m)

L = length of barrel (m)

n = Mannings roughness coefficient

g = gravity acceleration (= 9.8 m/s^2)

R = hydraulic radius (m)

A = Cross section area of flow (m^2)

A_b = Cross section area of barrel (m^2)

q = discharge per unit width (m^2/s)

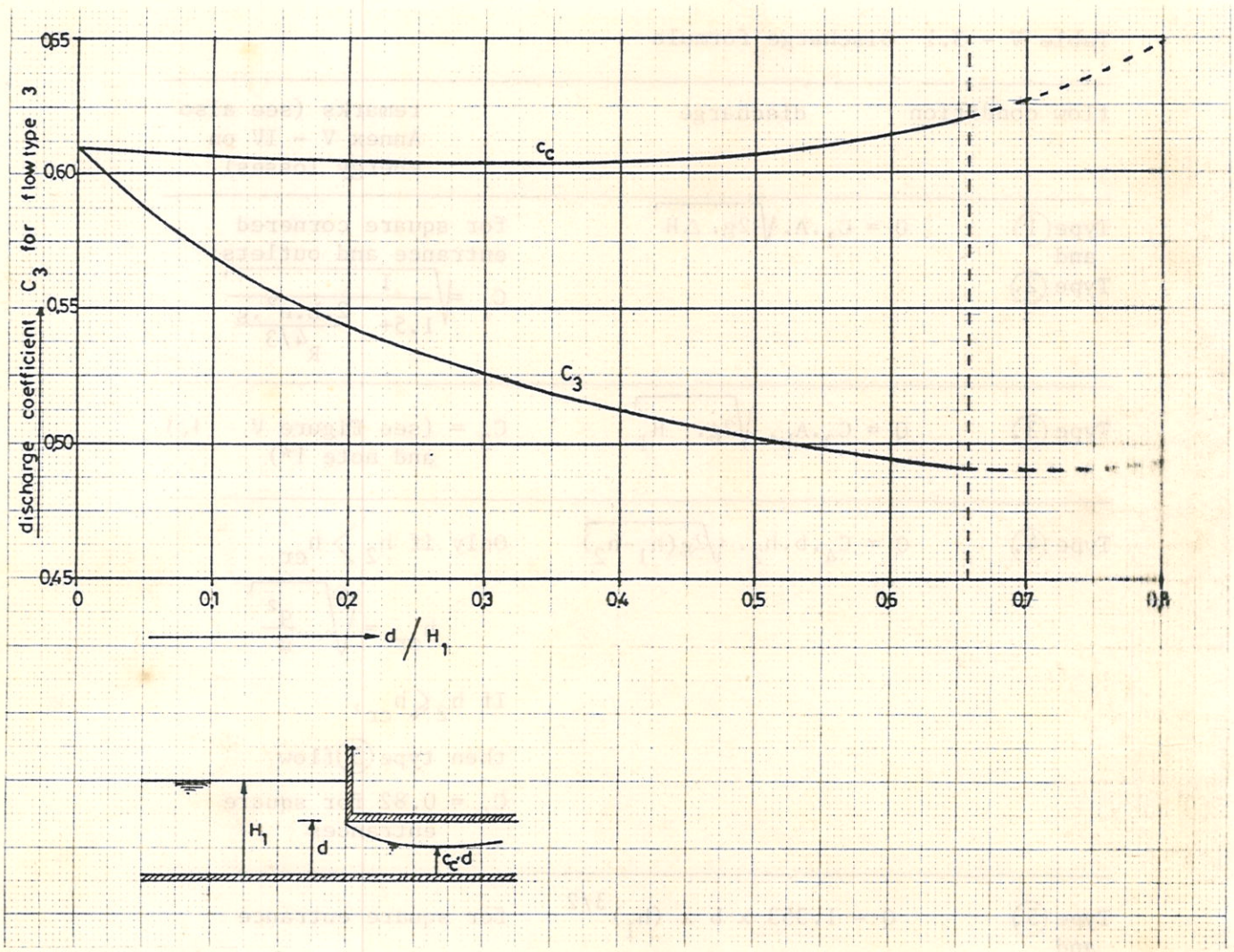

Figure V - 3.3 Discharge coefficient for flow type 3.

3.2 Short culverts

For short culverts (inside the polder under village roads and paths) in which the friction losses can be neglected in the formula

$$Q = C.A. \sqrt{2g. \Delta H}$$

the following values for C may be used :

Table V - 3.2 : Discharge coefficient for culverts

Bottom of culvert flush with channel bottom		bottom culverts higher than channel bottom		
entrance sides	C	bottom	sides	C
square	0.80	square	square	0.72
rounded	0.90			

3.3 Check structures

A check structure, or cross regulator, is a structure designed to raise the water level or to maintain a certain water level in a channel. In Chapter 2 and Volume IV, Chapter 6, some examples of the use of check structures have been given. A check structure may be a fixed overflow weir or may be an overflow or orifice provided with slide gates, stoplogs or checkboards (flashboards).

When a constant upstream water level is desired, an overflow type check is normally used. In many cases the channel will function both as irrigation as well as drainage channel. A check structure with removable gate, stoplog or checkboard is recommended in this case to cope with the much higher drainage flow in the period of excess rainfall. Sometimes a check structure can be combined with a culvert by fitting grooves with stoplogs or a slide gate.

The discharge formula for a free flowing weir is :

$$Q = C.\ b.\ H^{3/2}$$

in which Q = discharge (m^3/s)

b = overflow crest length (m)

H = head or waterdepth above the crest measured upstream of the check (m)

C = discharge coefficient ($m^{1/2}/sec$),

for broadcrested weir (stoplogs) : C=1.5-1.0

for sharp crested weir: C=1.9

for rounded weir: C=2.2

A check can also be made by means of a drop structure (see Figure V - 3.4). In this case the discharge can be calculated as :

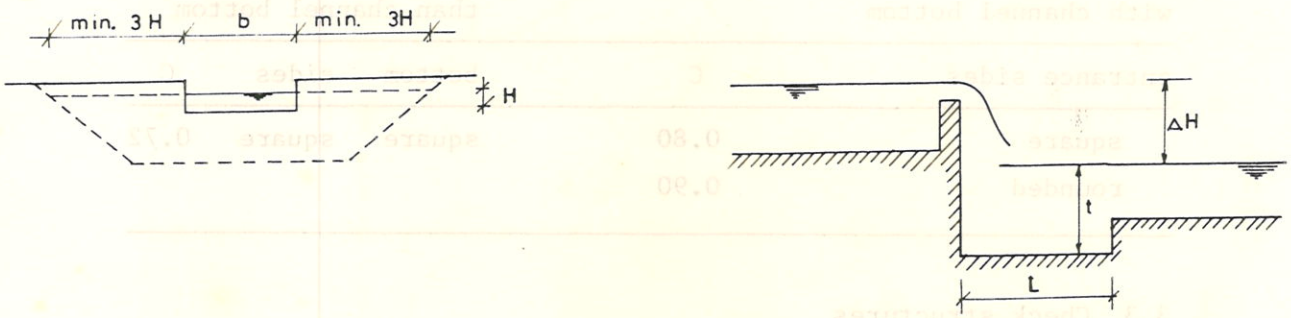

Figure V - 3.4 Drop structure.

$$Q = 1.83\ (b - 0.2\ H)\ H^{3/2}$$

For simple drop structures the dimensions of the depressed floor can be determined with:

$$L = 1.5 \times \Delta H \qquad (\Delta H = \text{drop})$$

$$B \times L \times t = \frac{Q \times \Delta H}{150}$$

wherein Q should be taken in l/s and B is the width of the floor.

In Volume VIII some examples of simple check structures are given.

Chapter 4. Design of Hydraulic Structures

4.1 Tidal inlet structures

4.1.1 Discharge capacity

The tidal inlet structure for the intake of water from a river or estuary is considered to be a long culvert and will have most of the time both a submerged inlet and a submerged outlet. Only at the beginning and at the end of the diurnal irrigation periods the inlet will not be submerged. For discharge calculations this can be neglected.

Long culverts with both the inlet and the outlet submerged will flow full like a pipe and thus flow condition (1) will prevail (see previous Chapter).

$Q = C_1 . A. \sqrt{2g. \Delta H}$ with: C_1 as indicated in paragraph 3.1

For Manning's roughness coefficient ANNEX V - 1 is to be consulted. For concrete lined boxes n = 0.015, for asbestos cement pipes n = 0.013.

For an 8" (20 cm) dia, asbestos-cement pipe the calculation is as follows :

$$D = 0.20 \text{ m}$$

$$A = 0.0324 \text{ m}^2$$

$$R = 0.0508 \text{ m}$$

$$C_1 = \sqrt{\frac{1}{1.5 + \frac{2 \times L \times (0.013)^2 \times 9.8}{(0.0508)^{4/3}}}} = \sqrt{\frac{1}{1.5 + 0.18\ L}}$$

if : $L = 26.5$ m

$$Q = C_1 . A. \sqrt{2g. \Delta H}$$

$$= 0.0573 \sqrt{\Delta H} \quad \text{m}^3/\text{s}$$

In Figure V - 4.1 the graphs of Q versus ΔH are presented for various sizes of pipes.

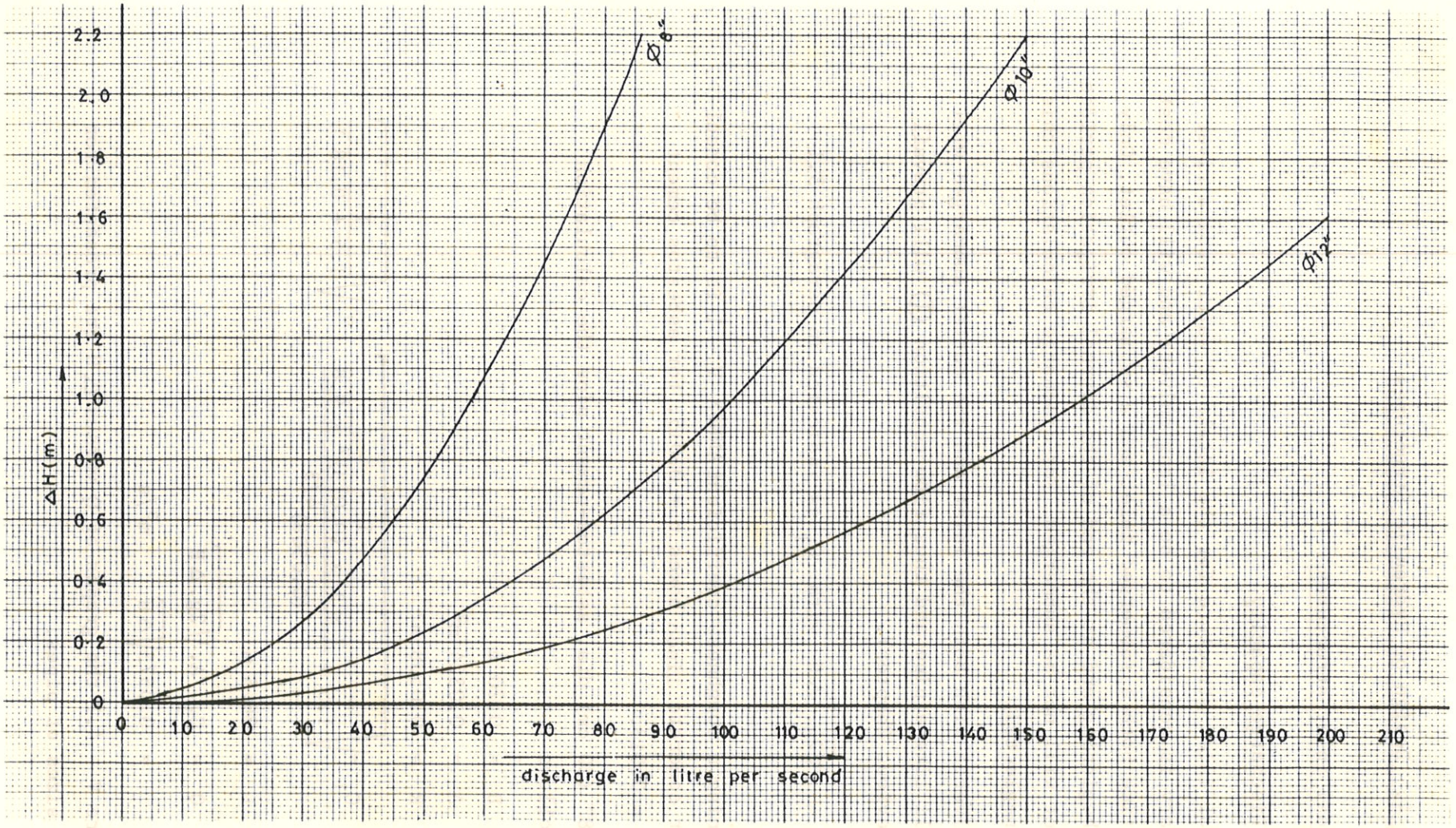

Figure V - 4.1 Pipe culvert discharge for a 26.5 m long barrel, for diameters 8", 10" and 12" pipe.

4.1.2 Area capacity

The area that can be irrigated by an inlet depends on :

- irrigation requirements
- size of the inlet
- outside water level
- ground level of the irrigation unit.

To calculate the area that can be irrigated with a pipe of a certain diameter the following example is worked out. The irrigation requirements are determined according to Volume IV, Chapter 3. It is assumed that the maximum requirements occur in September and October. In Figure V - 4.2 the tidal curves of the outside water levels are shown for these months. These curves are the monthly means of the daily observations. The curve of October is lower and also the irrigation requirements (in case of traditional varieties) are lower in this month. This means that the calculation has to be made for both months.

Assume: Irrigation Supply Requirements :

- September : 156 mm/month = 1560 m^3/ha/month
- October : 144 mm/month = 1440 m^3/ha/month

In Table V - 4.1 the volumes are determined which can be taken in through a 10" pipe inlet with a length of 26.5 m and design water levels in the polder of resp. 0.91 m, 1.07 m and 1.22 m + P.W.D. The volumes are graphically shown as the areas between the tidal curve and the ground level lines. The time axis is divided in portions of ½ hour starting from the centre of the curve. The central portion represents ½ hr. (= 1800 sec.), all the other portions have symetrical portions at the other side of the centre line and the average value of H can be multiplied by 1 hr. (3600 sec) to get the volume at both sides of the centre line.

For a 10" pipe (0.254 m) Q is calculated to be

$$Q = 0.1007\sqrt{\Delta H} \quad m^3/s$$

The areas which can be irrigated in September and October are given in Table V - 4.2 for the three design levels.

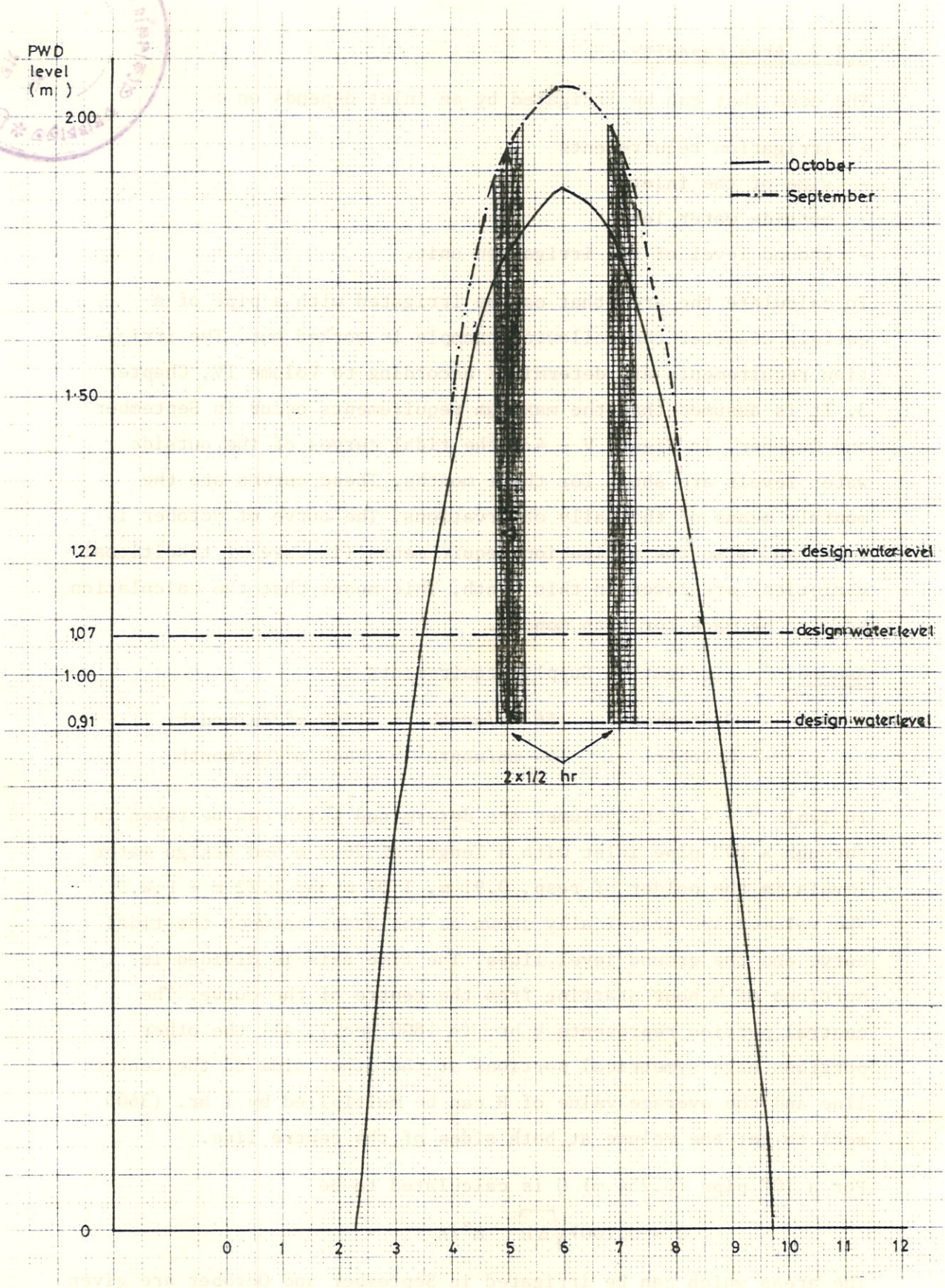

Figure V - 4.2 Mean tidal curve.

Table V - 4.1 Irrigation volumes

10" pipe	SEPTEMBER				OCTOBER			
design water level	ΔH (m)	Q (l/s)	ΔT (s)	$\frac{Q \times \Delta T}{1000}$ (m^3)	ΔH (m)	Q (l/s)	ΔT (s)	$\frac{Q \times \Delta T}{1000}$ (m^3)
0.91 m + P.W.D.	1.13	107	1800	193	0.95	98	1800	177
	1.11	106	3600	382	0.91	96	3600	346
	1.01	101	3600	364	0.84	92	3600	332
	0.88	94	3600	340	0.71	85	3600	305
	0.57	76	3600	274	0.45	67	3600	243
	0.17	42	3600	149	0.16	40	3600	145
	Total per tide 1702 m^3				Total per tide 1548 m^3			
	Total per month 100, 418 m^3				Total per month 91,335 m^3			
1.07 m + P.W.D.	0.97	99	1800	178	0.79	89	1800	161
	0.95	98	3600	353	0.75	87	3600	314
	0.85	93	3600	334	0.68	83	3600	299
	0.72	85	3600	307	0.55	75	3600	269
	0.41	65	3600	232	0.29	54	3600	195
	0.08	28	1800	51	0.08	28	1800	51
	Total per tide 1457 m^3				Total per tide 1289 m^3			
	Total per month 85,948 m^3				Total per month 76,053 m^3			
1.22 m + P.W.D.	0.82	91	1800	164	0.64	81	1800	145
	0.80	90	3600	324	0.62	79	3600	285
	0.70	84	3600	303	0.53	73	3600	264
	0.57	76	3600	274	0.40	64	3600	229
	0.26	51	3600	185	0.14	38	3600	136
	Total per tide 1249 m^3				Total per tide 1059 m^3			
	Total per month 73,747 m^3				Total per month 62,484 m^3			

Table V - 4.2 Irrigation area

design water level (m)+PWD	September intake (m^3)	September irrigation requirement (m^3/ha)	September area (ha)	October intake (m^3)	October irrigation requirement (m^3/ha)	October area (ha)
0.91	100.418	1560	64	91.335	1440	63
1.07	85.948	1560	55	76.053	1440	52
1.22	73.747	1560	47	62.484	1440	43

From the table it can be concluded that October is the critical month.

The method to calculate the area that can be irrigated by a pipe inlet of a certain diameter gives only an estimate. For accurate calculation, several factors which have a bearing on the intake volume, have to be accounted for.

a) Yearly variations in mean water level

The monthly mean values have been used. In some years, however, the mean water level may be lower or higher. If enough reliable data are available the frequency curves can be determined for the monthly mean water levels and the 90% (lower) mean water level may be used. In this case a higher value should be used for the effective rainfall for the determination of the irrigation requirements. The application of two safety factors will result in too severe requirements. In general the 90% effective rainfall in combination with the mean water level will give the lowest values for the area that can be irrigated.

b) daily variations of the tide

Throughout the month the tidal curve varies. The difference between the maximum water level at neaptide and at springtide may vary. In Figure V - 4.3 the HW levels are shown for Polder 22 in October 1981.

The deviation of the spring tide HWL value and the neaptide HWL value are plus or minus 0.36 m. Since the discharge through the inlet is related to the square root of Δ H, the use of the mean

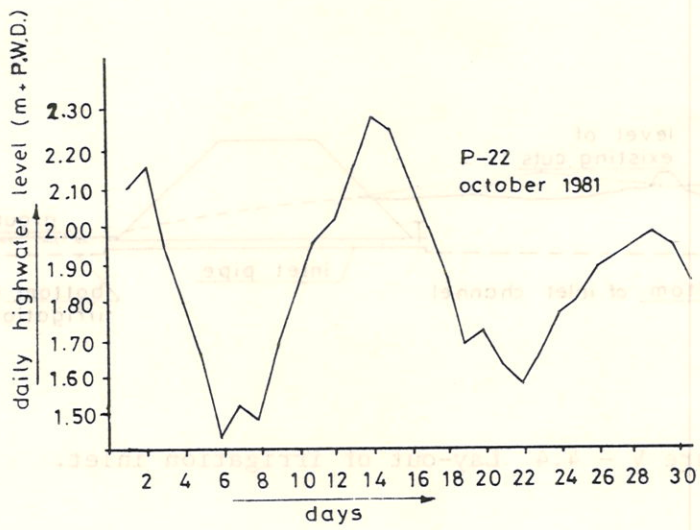

Figure V - 4.3 High water levels at Polder-22 during October 1981.

HWL is not fully correct and inlet quantities should be calculated with due attention to this phenomena.

4.1.3 Location selection

Several factors have to be taken into consideration for the selection of the location of inlet structures. Some of them are being dealt with in this section.

- Inventory of cuts in the embankment and inlet structures made by the farmers themselves. This gives an indication of the actual needs of the farmers. This inventory should be followed by interviews with the farmers to investigate whether inlets at these locations are required and/or additional inlets are needed.

- The inlet should preferably have a direct connection with the river. In general it can be stated that the level of the foreland is 0.3 - 1.0 m higher than the groundlevel inside the polder due to continued siltation on the foreland after the construction of the embankment. The present practise is that water is taken in via the foreland (see Figure V - 4.4). This means that irrigation actually can only start after the outside water level overtops the (higher) foreland (level a). The period of irrigation can be extended if a direct connection is made to

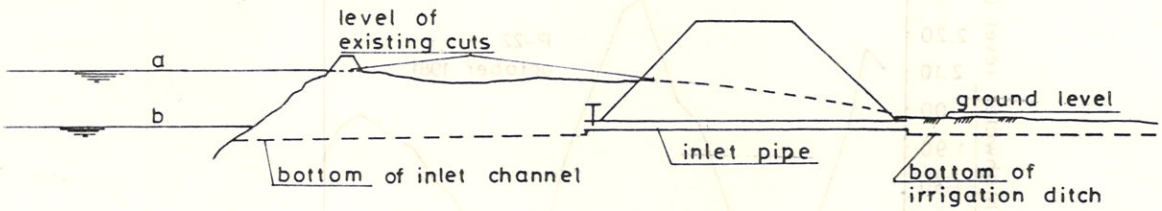

Figure V - 4.4 Lay-out of irrigation inlet.

the river so that irrigation can already start as soon as the river level rises above the inside groundlevel (level b).

- Siltation. If the connection channel between the inlet and the river is long (wide foreland), there is a risk of silting up. This can be avoided by creating a flow during each tide by filling and emptying the bunded foreland through openings close to the polder inlet. The water that leaves the bunded foreland during low tide will flush the silt from the connecting channel (see Figure V - 4.5).

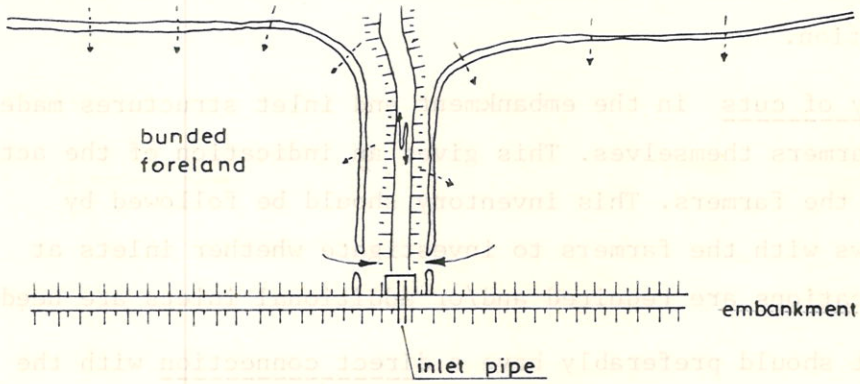

Figure V - 4.5 Flushing of inlet channel.

- Level. The inlet structure should preferably be located at or near the highest part of the irrigation unit, such as to reduce the construction of bunds. After the tidal irrigation interval (twice daily) the irrigation water may flow to the lower parts of the irrigation unit and the water level at the

inlet structure may drop below the groundlevel at the inlet structure. Therefore, it is recommended to have the invert-level of the inlet structures about 0.30 m (1 ft) below average groundlevel at the inlet structure, so that the intake at the next irrigation interval can start as soon as the outside water level rises above the polder water level that has been lowered during low tide due to the continued flow to the lower parts of the irrigation unit.

The inlet structure should be provided with a (very light) flapgate at the country side to prevent that water will flow back to the river during low tide.

4.2 Tidal Drainage sluice

4.2.1 Introduction

Once it has been decided according to the guidelines presented in Volume IV, Chapter 6, how many drainage sluices should be made and where these sluices have to be constructed, and the drainage capacity of each of these outlets has been determined, according to the procedures given in Volume IV, Chapter 2, the calculation for each individual drainage unit can commence. It should be realised that the discharge through a drainage sluice depends on the characteristics of the outer water (tidal, non-tidal), the type of drainage-regulator and that the through-flow is determined by criteria for permissable velocities through the structure and in the immediate vicinity of the structure.

In the following paragraphs calculations are presented for the hydraulic design of a tidal drainage sluice that has to convey a certain design drainage discharge as determined by the drainage modules of the area and the size of the area to the drained.

In principle several alternative modes of evacuating the excess water from an embanked area are possible, as is highlighted in Volume VII, Structural Design Aspects.

However, a drainage sluice with lowest possible invert level and a flapgate at the river-side is the most appropriate structure.

For the control of drainage flow and the maintenance of certain water levels inside the polder, the drainage sluice can be equipped with a sliding gate at the country-side. The crest height of this sliding gate in lowered position is determined by various criteria depending on the desired water level to be maintained.

Calculations for the free drainage through the flapgate and/or the controlled drainage through a sliding gate sluice are to be carried out with the formulas presented in Chapter 3 of this Volume.

The boundary conditions to be established before any calculations can start are the following :

- design drainage discharge .
- polder water level (design drainage level) occurring simultaneously with the design drainage discharge.
- hydrograph (tide-curve) of the river.

However in some cases, during certain periods of the year, the drainage sluice may be used as an inlet structure. Especially in areas where there is a combined irrigation-cum-drainage channel system. This may occur in the early monsoon when rainfall is insufficient and water needs are supplemented by letting in fresh river water.

The maximum inlet flow can be calculated after boundary conditions have been established for :

- hydrograph (tide curve) of the river.
- polder water level during stages of inlet-flow through the sluice.

The hydraulic design of the drainage sluice has to be such, that no damage will occur due to extreme velocities during drainage flow as well as maximum inlet-flow.

Another important aspect in the design of a tidal drainage regulator is the discharge capacity of feeder and outfall channel of the sluice and their bottom width in relation to the width of the drainage structure. The regulator width is again determined by the discharge requirements and the characteristics of the river side water levels.

In the calculation process for the hydraulic design of the drainage sluice the following steps are distinguished.

1. Determine location and drainage capacity of the sluice to be build. (see Volume IV, Chapter 2 and 6).
2. Determine boundary conditions of inside and outside water levels during stages of design drainage discharge and during stages that the sluice is used as an inlet-structure.
3. Check if the capacity of the natural available channel, which has to operated as main drainage channel, is adequate.
   If not, enlarge the cross-section of the channel, or choose

other channel or re-consider the required capacity of the sluice and/or location and sizes of the drainage structures.

4. Determine the required invert level of the sluice, considering the different criteria
   - discharge capacity
   - maximum permissable velocities
   - width of the sluice/drainage channel
   - foundation conditions.

5. Make a sketch design of the regulator structure with rough dimensions, considering the foundation possibilities, invert level at the construction site and the drainage requirements.

4.2.2 Location selection

The location of a sluice should be such that optimal use is made of existing khals for the drainage of the considered area. Mostly sluices are built close to existing drainage out-lets, in order to reduce excavation of feeder and outfall channels. However, the natural drainage capacity of an existing khal should correspond with the capacity of the sluice, and the total lay-out of the drainage system in a polder with several drainage structures should be in concert with this principle. The item of drainage lay-out is further elaborated in Volume IV, Chapter 5 and 6.

4.2.3 Boundary conditions for water levels at the drainage sluice

During stages of drainage flow, the polder water level is at or above the design drainage level as determined for the polder.

Actually, during stages of design drainage discharge the water level in the polder may be in between the design drainage level and the maximum allowable water level (design drainage level + allowable storage as determined according to Chapter 2, Volume IV).

For the calculation of the sluice dimensions, based on the average design drainage discharge, the polderwater level is therefore assumed to be half way in between the design drainage level (d.d.l) and the maximum allowable storage level (m.a.st.l).

During the year the design drainage level may vary as the crop grow stage and water requirements vary. Normally, in the monsoon period the design drainage level corresponds with the required water level in the rice-fields (if a rice-crop polder is considered.)

The design drainage discharge through the sluice is to be calculated at average tide conditions of the river water.

Average tide is defined as the average tidal amplitude ranging form M.H.W. (mean high water) to M.L.W. (mean low water) at average river level (F.M.L. = fortnightly mean level) for the considered time of the year.

All water levels M.H.W., M.L.W., H.H.W. and L.L.W. are to be determined via relation curves to be made of gaugereadings from neighbouring gauge stations and the temporary gauge installed at the construction site.

During a certain period of the year the sluice may be used to let in fresh river water into the polder. For the polder water level during these stages a lower level than the design drainage level is to be taken. Although the rainfall will start before the river water turns fresh and can be used for supplementary irrigation, the rain is not enough to fill up the drainage/irrigation channels upto design level. In order to account for most unfavourable conditions to calculate the maximum inlet flow, the polderwater level at this stage is assumed to be 0.30 m below average groundlevel of the lowest drainage unit in the polder.

For the riverwater the H.H.W.S. (highest high water spring) exceeded during 50% of the years of records is to taken.

For maximum velocities during drainage conditions, the riverwater is taken at L.L.W.S. (lowest low water spring tide), exceeded during 50% of the years of record. The polderwater level during this stage is considered to be at maximum allowable storage level (in our example + 0.30 m above design drainage level).

Summarizing the following levels are to be applied in the hydraulic calculations for the drainage sluice.

Criteria	Polder water level	river level
Drainage discharge	half way in between maximum storage level and design drainage level.	average tide conditions (mean tide)
max. inflow velocity	0.3 m below design drainage level	highest high water, HHWS (50%)
max. outflow velocity	maximum storage level.	lowest low water, LLWS (50%)

An important aspect in relation with the determination of the water level boundary conditions is the characteristics of the main drainage and sluice out fall channel. The depth of feeder and outfall channel should be such that at all critical design conditions as mentioned above, the discharge can be conveyed without exceeding maximum velocities. The bottom depth of the feeder channel should at least be 0.5 m below the lowest polder water level occuring in the dry season. The reasoning is that by maintaining a low polder water level the capillairy rise from saline ground water into the top ground layers is reduced. Sluice invert level should therefore allow the drainage at this stage (all be it rather small and during limited periods).

The depth of the outfall channel is determined by the lowest tide conditions (L.L.W.) at which stage the maximum discharge has to be conveyed. Although an outerchannel at this depth would most likely silt up because these low water conditions occur infrequently, the bottom protection behind the sluice has to be designed on these conditions.

4.2.4 Capacity of the drainage sluice and the connecting channels

For the determination of the drainage discharge, e.g. the required drainage capacity of the sluice, the following data are used to illustrate an example :

example:

- gross area : 2500 ha
- drainage module : 30 mm/day

- sluice coefficient : $\frac{T_0}{T} = 1.7$ T_0 = tidal cycle = 12 hrs 25 min.
  T = drainage time during one tidal cycle.

The drainage time is estimated at first from the tidal curve and the level of the polder water at the start of the drainage. Later on, after flood routing calculation, it is to be checked whether this has to be corrected.

The total volume of water to be evacuated during 24 hours is :

(drainage module) x (area) =
$0.03 \times 2500 \times 10^4 \ m^3$ = $750.000 \ m^3$.

If the tidal cycle is 12 hours 25 minutes and the sluice coefficient is 1.7 then the average discharge through the sluice during the drainage period T should be :

$$Q_{av} = 750.000 \times 1.7 \times \frac{1}{24 \times 360} = 14.8 \ m^3/s$$

Since the drainage discharge during the period T will not be constant but will increase from zero to a certain maximum and will then gradually decrease due to the decreasing polderwater level during T, the maximum drainage discharge is taken to be :

$$Q_{max} = \frac{1}{0.85} \times Q_{av} = 17.36 \ m^3/s$$

The coefficient 0.85 is an estimation based on experience and can later be checked after the floodrouting calculations have yielded the discharge curve of the regulator during the discharge time T.

For the determination of the discharge capacity of feeder and outfall channel extensive surveys have to be made of length, width, depth and natural condition of slopes and bottom growth. A complete description of the channels, obtained by physical site inspection by the responsible designer, complemented with large scale topographic maps, is imperative. Hydraulic calculations using Mannings equation are to be used (see Chapter 1).

The average cross-section of the feeder-cum-outfall channel has to be determined from measured profiles. Cross-sectional profiles should be taken at distances not exceeding five times the width of the channel. From the cross-sections, a long-section should be plotted, showing the average depths of all consecutive cross-sections.

The average cross-sectional profile and slope of the channel can thus be determined as indicated in Figure V - 4.6. It is essential that all soundings should be plotted relative to the same datum.

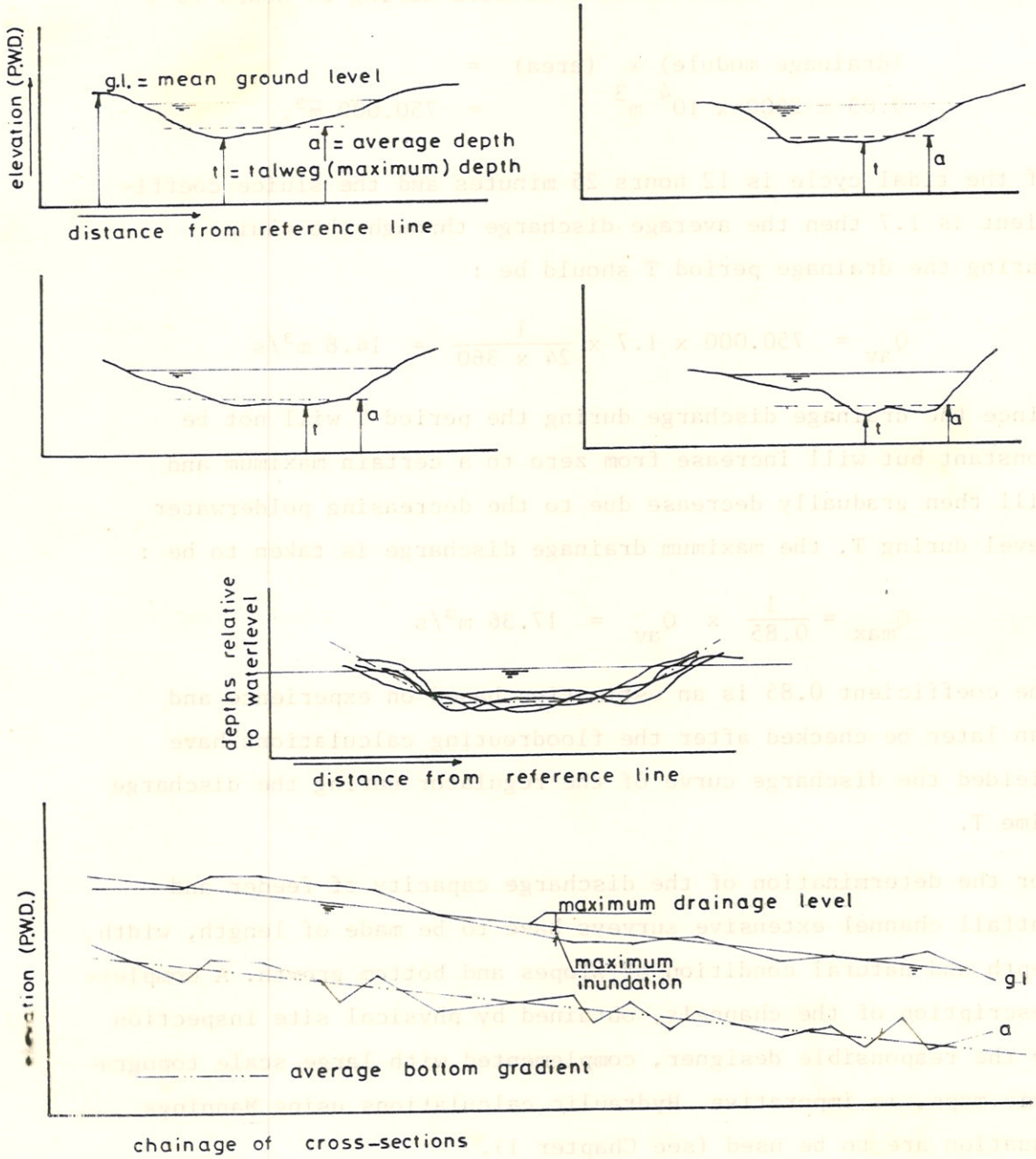

Figure V - 4.6 Cross-section plotting for channel calculations.

If roughness, n, slope S, and average cross-section have been determined, the discharge capacity of the channel can be determined. The maximum drainage discharge capacity of the channel is to be checked with the water level at design drainage level. Since this is the most unfavourable situation to occur.

During the drainage period T, the water level in the main drainage channel will gradually assume a gradient towards the sluice and the water level at the sluice will be lower then the water level at the start of the drainage period.

How to calculate the water levels at the sluice and in the drainage channel during fully developped drainage flow is demonstrated in ANNEX V - 3.

In the same process the average velocities occurring in the drainage channel during the different water level and discharge stages can be checked.

The velocities should at all stages remain below a value at which considerable scour would occure (see Chapter V - 1.4).

For silty clay this velocity is 0.8 m/s.

At the same time the dimensions of the outfall channel should be such that the maximum discharge can be conveyed, even at lowest tide conditions, without causing velocities that exceed above 1.0 m/s. In any case the capacity of the sluice and the capacity of the inflow and outflow channel should be in harmony and should be analysed for all critical flow stages, drainage and flushing.

4.2.5 Dimensions of the sluice, invert level

From the discharge formulas presented in Chapter 3 of this Volume, it can be seen that the discharge through a structure increases if :

1) The wet profile A increases, in case the barrel of the sluice is submerged.

2) The upstream waterhead h, increases, in case the barrel is not submerged.

For our problem this means that the invert level of the structure, which determines the upstream head h, should be as low as possible in order to get a maximum flow through a minimum size structure.

On the other hand the discharge through a structure should be such that flow velocities do not exceed 3,5 m/s since this may create damages to the construction and unwanted turbulences and disturbances.

A third criteria may be the average velocity created in the drainage channel by the maximum drainage discharge, causing scour. Although this could be cured by increasing the channel profile,velocities could also be reduced by raising the invert level.

A fourth and most important criteria is the soil conditions at the construction site, which may prohibit a deep invert level requiring deeper foundations.

In most cases in the Bangladesh Delta Area the second and fourth criteria will be the determining factors for the design of sluice invert level.

If the sluice is also to be used for inlet, then a deep box will give even higher discharges and flow velocities, since the maximum head difference at inlet conditions might be higher than at drainage conditions. However, foundation at a convenient depth may only be possible at very high costs, which are out of proportion to the whole construction cost. Moreover, a deep box will require high and thus expensive wingwalls.

A compromise has to be found, in which proper drainage capacity is combined with adequate foundation and construction costs. If the maximum discharge is determined, then the width of the sluice follows from the maximum allowable velocity in the sluice and the invert level.

If the invert level is not restricted by foundation conditions then the maximum allowable sluice velocity will determine this invert level.

If the invert level of the sluice is not limited by foundation conditions, the velocities occurring in the sluice will be the determining criterium.

In order to demonstrate the calculations procedure to establish the sluice invert level and width, the following information is assumed :

- Drainage area as indicated in ANNEX V - 3.
- Design drainage level : + 1.00 m.
- Maximum allowable storage level : + 1.30 m
- Profile of the main drainage channel as shown below.

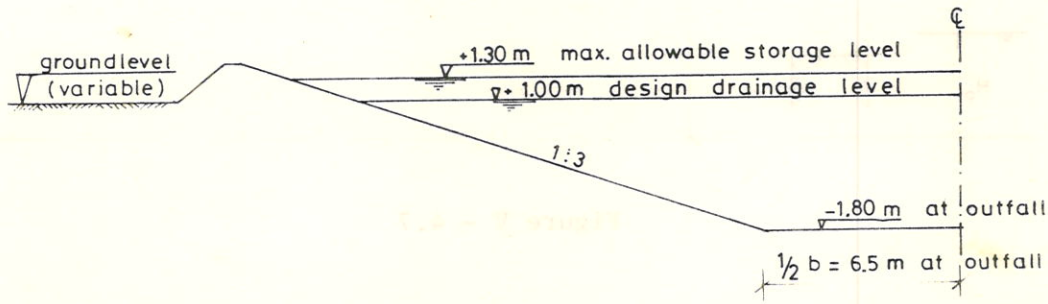

- Bottom level of drainage channel near the outfall :-1.80 m.
- average bottom slope of drainage channel : as shown on ANNEX V - 3.
- length of main drainage channel : 6800 m
- drainage area : 2500 ha
- drainage module : 30 mm/day
- tide curve : as shown in ANNEX V - 3, Figure A.V - 3.4.
- area of tertiairy and secondary drainage channels : 105.000 m^2
- area of low pockets which are in open connection with the drainage channel : 1% of 2500 ha + 250.000 m^2.

To determine the flow velocities in the sluice, the upstream water level and the tide have to be known. The tidal curve is known. The water levels just upstream of the sluice have to be determined for the various stages of the flow during the drainage period T, since this flow is gradually changing in time and will generate a back-water curve towards the end of the drainage channel. (see Figure V-4.7).

To know the water level H_x near the sluice in relation to the discharge in the drainage channel and the water level H_i at the upstream end of the drainage channel a delivery curve has to be calculated for the drainage channel for various Q and various values of H_i.

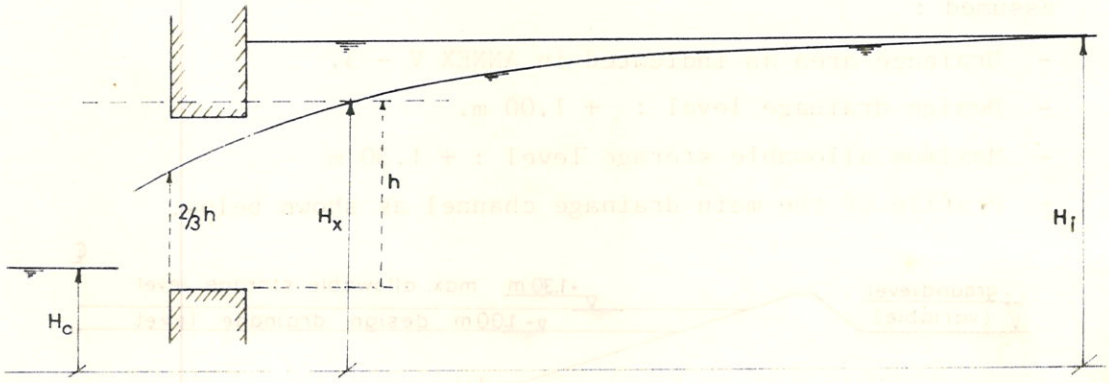

Figure V - 4.7

For our drainage channel the delivery curves have been calculated according to the procedures and diagrams presented in ANNEX V - 3, to which is referred.

The critical condition occurs when the polderwater level is at maximum storage level (+ 1.30 m) and the flow has reached its maximum value (Q = 17.36 m^3/s) during the drainage period T.

The corresponding backwater at the sluice is now taken from the delivery diagram of the drainage channel as shown in ANNEX V - 3, resulting in a water level at the sluice of + 1.28.

In fact, the maximum discharge of 17.36 m^3/s was assumed to occur during average drainage conditions with polderwater level H_i at the upstream end of the drainage channel at the medium between maximum storage level (+ 1.30 m) and design drainage level (+ 1.00 m).

The maximum drainage during extreme conditions with polderwater level H_i at + 1.30 m, will be higher and will at the same time result in a

smaller value of H_x at the outfall of the drainage channel. But, as will be shown later on, by estimating Q_{max} at $\frac{1}{0.85} \times Q_{av}$, we will be on the safe side.

It is now assumed that the outside water level has dropped so far that the difference between inside and outside water level at the sluice will cause the sluice discharge to be under flow condition 5.

The criteria for maximum velocities in the sluice was 3.5 m/s under these extreme conditions.

The maximum permitted water head H_x can now be calculated as follows : (see Figure V - 4.7).

flow condition (5) : $q = C \times (H_x)^{1.5}$

continuity : $q = h \times v_{max}$

critical depth control at box - exit : $h = 2 \times \frac{(v_{max})^2}{2g}$

it follows that : $C \times (H_x)^{1.5} = \frac{(v_{max})^3}{g} = 4.375$

For square cornered entrances of the box, C is taken at 1.35. For the theoretical unit width discharge with no entrance and friction losses C could be upto 1.70.

For the estimation of the maximum discharge/velocity per unit width in the sluice, take C = 1.60, yielding for H_x = 1.96 m.

The invert level should now be at : 1.28m - 1.96 m = - 0.68 m P.W.D. If, for instance , initially Q_{max} was chosen at $1.5 \times Q_{av} = 1.5 \times 14.8 = 22\ m^3/s$, the draw-down at the sluice would have been at + 1.06 m and the invert level would become: 1.06 m - 1.96 m = - 0.90 m P.W.D.

Invert level is now provisionally chosen at a level in between these results, at - 0.80 m P.W.D.

The width of the sluice is now determined assuming average drainage discharge conditions ($Q = 14.8\ m^3/s$) and the polder water level at the start of the drainage period T assumed to be half in between

maximum stage level and the design drainage level, i.e. at + 1.15 m.

The backwater H_x for this situation is now taken from Figure A.V - 3.2 ANNEX V - 3 and yields for H_x = + 1.13 m.

This level will be reached shortly after the start of the drainage period T, but will then drop further as the continued drainage will cause the water levels in the polder to drop further.

How the water levels will be at the end of the drainage period is approximated as follows :

area : 2500 ha as indicated on Figure V - 2.1.

drainage modules : 30 mm/day

area drainage requirement : $2500 \times 10^4 \times 0.03$ = 750.000 m^3/day

sluice coefficient To/T = 1.7 hrs = 31.250 m^3/hr

= 8,68 m^3/s

sluice drainage requirement : 14,8 m^3/s during period T.

discharge during sluice period : (T = 7.3 hrs) x 14,8 x 3600 =

= 389.153 m^3.

Supply to drainage channels during the sluice period T :

(T = 7.3 hrs) x 31.250 m^3/hr = 228.248 m^3.

Storage decrease in drainage channels during sluice period T:

389.153 - 228.248 = = 160.905 m^3

The average decrease in polderwater level at the end of the drainage period T is calculated as follows :

- The surface area of the drainage channels is calculated : (see Figure V - 2.1 and ANNEX V - 3).

section :	a-b	b-c	c-d	d-e	e-a*	b-f	f-b*	c-g	g-c*
length (m)	1600	900	1400	600	2300	1200	1400	1400	1100
bottom width (m)	13	13	10	10	9	10	5	10	5
Channel width (m) at surface +1,15m	19,3	26,7	21,4	19,8	17,7	23,0	15,4	21,0	14,0
surface area (m^2)	46880	24030	29960	10880	40710	27600	21560	29400	15400

total area : 247,400 m^2.

- Additional storage area available in secondary and tertiary drainage channels :

  assume surface width at + 1.15 m to be 3 m.

  total length : 29,600 m. (depending on the features of the area under consideration).

  area : 3 x 29.600 = 88,800 m^2.

- Additional storage provided by the low pockets in the area which are in open connection with the drainage channels : 1% of total area = 250,000 m^2.

The total storage are is thus 247.400 + 88,800 + 250.000 = 586,200 m^2.

The average drop of the polderwater level at the end of the drainage period is then : $\frac{160.905}{586.200} = 0.27$ m.
yielding on average level of + 1.15 m - 0.27 m = + 0.88 m.

However immediately after the drainage stops, the water level will still show a gradient, with the level near the sluice below this + 0.88 m and at the end of the drainage channel above this + 0.88 m.

This level at the end of the drainage channel at the end of the drainage period T has to be found by trial and error.

In this example this is worked out with the help of the diagrams of ANNEX V - 3 resulted in a level of + 0.93 m at the end of the drainage channel and + 0.66 m near the sluice for a channel discharge of Q = 14.8 m^3/s.
The storage decrease in this situation is :

- from + 1.15 m to + 0.93 is 0.22 m,times the total storage area :

  0.22 x 586.200 = 129.000 m^3

- under the backwater curve starting at + 0.93 m :

section	a-b	b-c	c-d	d-e	e-a*	b-f	f-b*	c-g	g-c*
length (m)	1600	900	1400	600	2300	1200	1400	1400	1100
bottom width (m)	13	13	10	10	9	10	5	10	5
width at surface + 0.93 m	28,0	15,5	20,1	18,5	16,5	21,8	14,1	19,7	12,7
surface area (m^2)	44800	22950	28140	11100	37950	26160	19740	27580	13970
Total area (m^2)	232.400								

section	a-b	b-c	c-d	d-e	e-a*	b-f	f-b*	c-g	g-c*
difference between +0.93 m level and backwater curve level starting from +0.93 m	0.22	0.18	0.16	0.12	0.04	0.18	0.16	0.18	0.15
Volume under +0.93 backwater curve (m^3)	9856	4131	4502	1332	1518	4708	3158	4964	2095
total volume (m^3): 36.260									

The total storage decrease is now 129.000 + 36.260 = 165.260 m^3 which is in good accordance with the aforementioned 160.905 m^3.

The polder water level near the sluice during the sluice period T is thus approximated from + 1.15 m at the start of T, to + 1.13 m shortly after the start, to + 0.66 at the end of T.

The average polder water level at the sluice is thus :

$$H_x = \tfrac{1}{2}\,(1.13 + 0.66) = +\,0.90 \text{ m}$$

The invert level of the sluice was established at - 0.80 m.

Assumed flow condition (5) during most of the sluice period, with an average headwater of [0.90 - (- 0.80 m)] = 1.70 m, then the average sluice discharge per unit width is $q = 1.35 \times (H_x)^{1.5} = 1.35 \times (1.70)^{1.5} = 2.99\ m^2/s$.

The required average sluice discharge is 14.8 m^3/s, yielding a required width of $\frac{14.8}{2.99} = 4.95$ m.

The simplification made in above calculation is to assume that the discharge through the channel-sluice system remains constant during the sluice period T at $Q_{av} = 14{,}8\ m^3/s$.

In fact this discharge will be higher than average at the beginning , resulting in a lower level of H_x at the sluice, and lower than average at the end of T, resulting in a higher H_x. However, averaging the values of H_x will yield almost the same average H_x during the sluice period T.

The physical features are further highlighted in ANNEX V - 3.

With a floodrouting procedure, a more accurate determination of the sluice discharge during the drainage period T can be made as is demonstrated in ANNEX V - 3 d), but above method gives a result which will be within 10% of the exact results.

A check is made on the sluice discharge at this invert level and the polderwater level at maximum (+ 1.30 m) with the calculated backwater at the sluice of + 1.28 m.

Sluice discharge : $Q = 1.35 \times 4.95 \times (1.28 + 0.80)^{1,5} = 20.1\ m^3/s$.

Channel discharge was 17.36 m^3/s for the calculated backwater. A correction can be made on this by increasing the channel discharge, which will bring down the backwater and thus decrease the sluice discharge. This can be done graphically by using the information of the delivery curves as presented in ANNEX V - 3.

For various channel discharges the corresponding H_x is plotted against Q with H_i remaining constant at + 1.30 m. This yields line 'a' in Figure V - 4.8.

In the same graph the sluice discharge is plotted against the headwater H_x. Since flow condition (5) was assumed this sluice discharge is :

$$Q = 1.35 \times 4.95\ (H_x + |-0.80|)^{1.5}$$

These plots represent the line 'b'.

Where 'a' and 'b' intersect, sluice discharge and channel discharge are equal. This yields a backwater $H_x = 1.25$ and a corresponding $Q_{max} = 19.6\ m^3/s$.

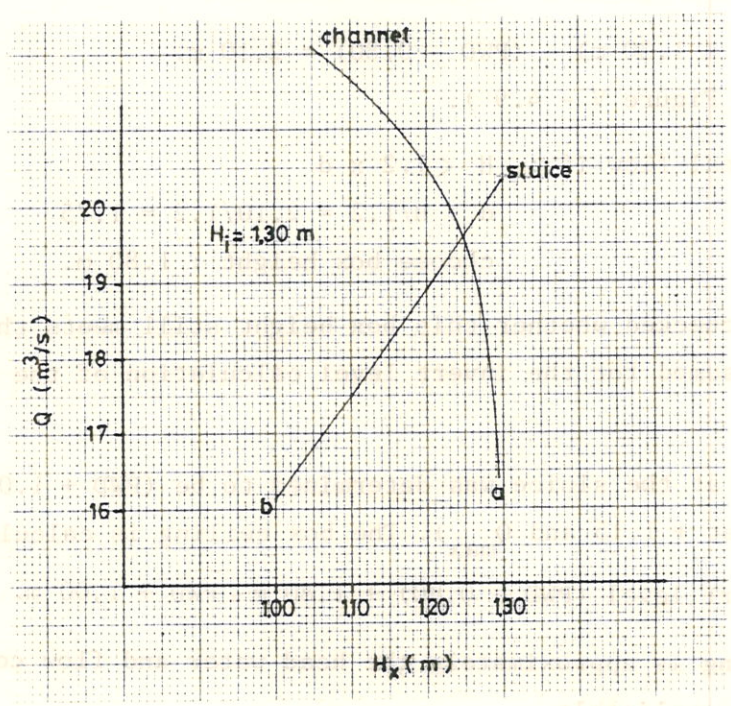

Figure V - 4.8

The maximum velocity in the sluice will then be :

$$q = h \times v_{max} = \frac{(v_{max})^3}{g} \quad ; \quad q = \frac{Q}{4.95} = 3{,}96 \ m^2/s.$$

It follows that $v_{max} = 3.39$ m/s ($<$3.5 m/s !).

If invert level would have been chosen at - 0.90 m the required sluice width would be 4.55 m and the maximum velocities would have been upto 3.5 m/s.

The final choice of invert level and sluicewidth should be made, considering the economy of the whole construction, the foundation possibilities and the maximum velocities occuring in the sluice. It may be more economic to construct a sluice width only three vents and a deeper invert level if foundation does not cause any problems.

On the other hand a four vent sluice might be more expensive in concrete work but due to the smaller invert level, foundation may be cheaper and protection works may be less expensive because of lower extreme velocities.

<u>The height of the box should be such that during maximum drainage conditions supercritical flow in the sluice is avoided.</u>

In our example :

From maximum storage level to invert level is :

(PWD + 1.30 m) - (PWD - 0.80) = 2.10 m.
(see Figure V - 4.9).

No supercritical flow if : $H < 1.2 \times d$

$d > H/1.2 = 2.10/1.2 = 1.75$

choose box height : 1.80 m.

It should be checked whether this box height still meets the flow conditions assumed for the invert level calculation of the previous pages.

The headwater at the sluice was determined to be (PWD + 1.03). (polderwater at + 1.15 and Q_{max}). The box ceiling is calculated to be:

invert level (PWD - 0.80) + 1.80 m = PWD + 1.00 m.

So, box ceiling is approximately the head water and flow condition (5) is indeed applicable.

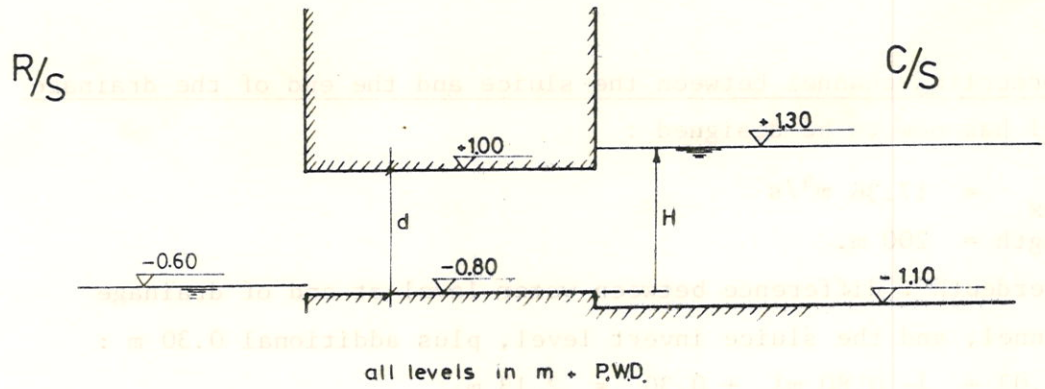

Figure V - 4.9

A sketch lay out of the sluice basic dimensions can now be made (see Figure V - 4.10) in which length of the box, length and height of the wingwalls is evaluated in order to economise on the concrete work.

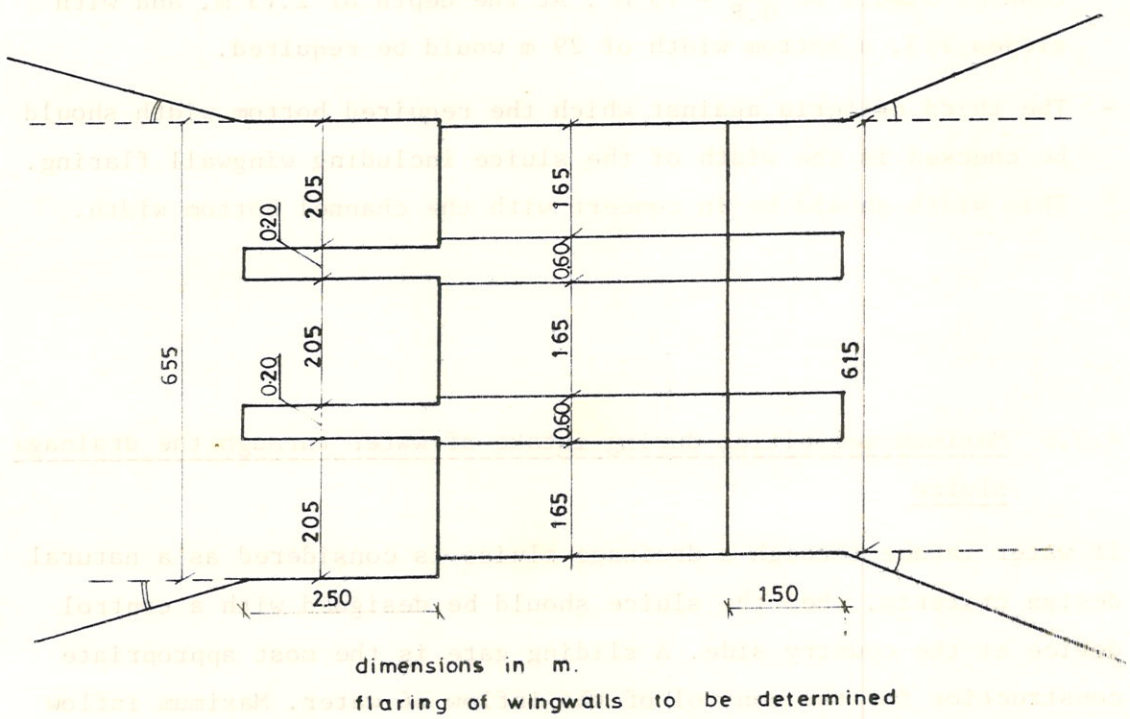

Figure V - 4.10

The connecting channel between the sluice and the end of the drainage channel has now to be designed :

- Q_{max} = 17.36 m^3/s
  length = 200 m.
  waterdepth : difference between water level at end of drainage channel, and the sluice invert level, plus additional 0.30 m :
  + 1.03 + |- 0.80 m| + 0.30 = 2.13 m.
  Slopes : 1 : 3
  formula: $Q = \frac{1}{h} \cdot A. R^{2/3}. S^{\frac{1}{2}}$
  unknown yet : bottomslope and width.
  choose bottom slope : 8×10^{-4}
  it follows that the bottom width should be : 2.60 m.

- However in case of inlet of water the discharge through the channel will be much higher, say 60 m^3/s. In order to keep velocities within limits, say 0.8 m/s, the profile of the channel should be $\frac{60}{0.8}$ = 75 m^2. At the depth of 2.13 m, and with slopes 1:3, a bottom width of 29 m would be required.

- The third criteria against which the required bottom width should be checked is the width of the sluice including wingwall flaring. This width should be in concert with the channel bottom width.

4.2.6 Maximum velocities during intake of water through the drainage sluice

If water intake through a drainage sluice is considered as a natural design criteria, then the sluice should be designed with a control device at the country side. A sliding gate is the most appropriate construction for the control of the inflow of water. Maximum inflow can be restricted by limiting the maximum clearance that can be given between the bottom of the lifted sliding gate and the invert level.

If intake of water is not a regular operation criteria for the drainage sluice and no specific constructions for the control of inflow are included in the design of the sluice, it still is advisable to check what flow conditions may occur in case the flapgate of the drainage sluice is tied up and the flow is permitted to enter the polder freely through the sluice.

As explained before the boundary conditions for this extreme situation are :

- Outside water level at maximum stage (highest high water spring tide).
- Polderwater level at design drainage level minus 0.3 m.

The calculation process for the determination of the velocities in the drainage sluice and the design of the country side wingwall and reception bed construction are further on demonstrated using the following basic dimensions of the sluice.

Invert level at - 0.65 m.
Ceiling of the box at + 0.95 m.
Sluice width : 4 vents of 1.50 m wide = 6.00 m.
Water level outside at + 2.70 m (HHWS)
Polderwater level at + 1.20 m.
Crest of the embankment at + 4.20
C/S slope of embankment 1:2
Drainage channel bottom at - 0.90 m.
bottomwidth 13 m.
slopes 1:3.

The flow through the regulator at this stage is shown in Figure V - 4.11.

Assume flow condition (1), both inlet and outlet of the box submerged (see Chapter 3, paragraph 3.1).

$$Q = C_1 . A . \sqrt{2g . \Delta H}$$

For the outside water level, H_o (energy head) may be assumed equal to h_o (waterdepth) since the velocity head $\frac{(v_o)^2}{2g}$ is very small.

For the inside water this may not be true, therefore as a first approximation of the discharge :

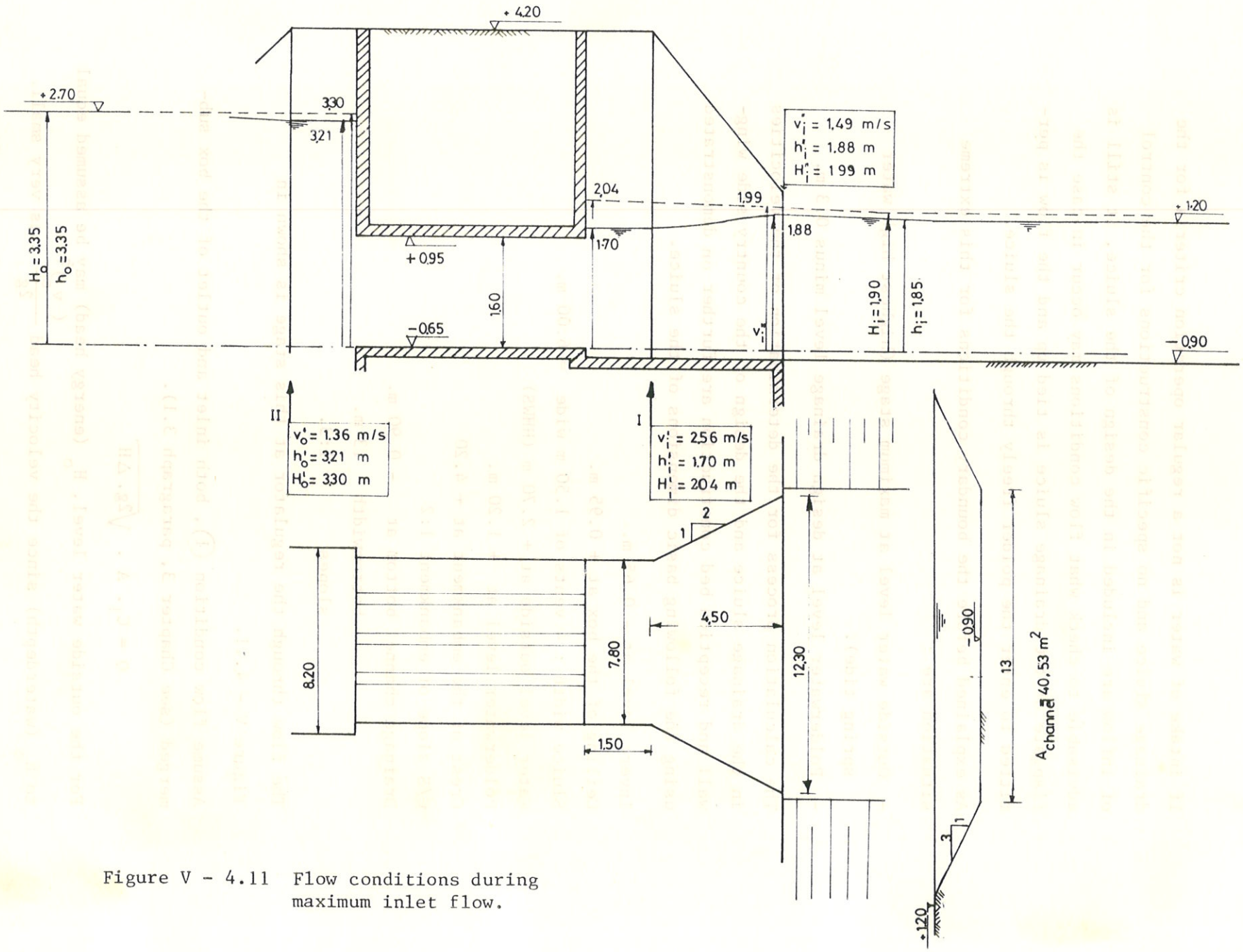

Figure V - 4.11 Flow conditions during maximum inlet flow.

$$Q = 0.82 \times (6.00 \times 1.60) \times \sqrt{2 \times 9.8 \times (3.35 - H_i)}$$

$$= 34{,}85 \sqrt{(3.35 - H_i)} \qquad \ldots\ldots \qquad \ldots\ldots \qquad (1)$$

applying Bernouilli :

$$H_i = h_i + \frac{(V_i)^2}{2g} = 1.85 + \frac{(Q_i)^2}{2g.\ (A_i)^2} \qquad \ldots\ldots \qquad (2)$$

Substituting (1) in (2) yields :

$$H_i - 1.85 = 0.0377\ (3.35 - H_i)$$

$$H_i = 1.90 \text{ m}$$

and:

$$Q = 42.0 \text{ m}^3/\text{s}$$

The change in energy head from 3.35 m at the river side to 1.90 m at the country side can be expressed in the following energy losses:

$$\Delta H = \Delta H_{con} + \Delta H_{ent} + \Delta H_{exit} + \Delta H_{exp}$$

in which:

ΔH_{con} = contraction losses from the natural channel to the box entrance.

ΔH_{ent} = entrance losses

ΔH_{fr} = friction losses in the box

ΔH_{exit} = exit losses

ΔH_{exp} = expansion losses of the flow from the box exit to the natural channel.

From hydraulic hand books it is assumed that : (ref. 2).

$$\Delta H_{con} = k_{con} \times \frac{(v'_o)^2}{2g} \quad ; \quad k_{con} = 0.06$$

$$\Delta H_{exp} = k_{exp} \times \frac{(v'_i - v_i)^2}{2g} \quad ; \quad k_{exp} = 0.29$$

For contraction and expansion coefficients, see ANNEX V - 4.

For definition of v'_i, v_i and v'_o and v_o, see Figure V - 4.11.

For simplification, v'_o and v'_i are taken equal to the velocity in the box.

$$v'_i = v'_o = \frac{Q}{A_{box}} = \frac{42.0}{6.0 \times 1.6} = 4.38 \text{ m/s} \longrightarrow \Delta H_{con} = 0.06 \text{ m}$$

$$v_i = \frac{Q}{A_{ch}} = \frac{42.0}{40.53} = 1.04 \text{ m/s} \longrightarrow \Delta H_{exp} = 0.16 \text{ m}$$

The total of entrance, friction and exit losses for a square edged concrete box of 1.5 x 1.6 m^2, not longer than 10 m are already expressed in the coefficient $C_1 = 0.82$ of the discharge formula.

So : $\Delta H = 3.35 - 1.90 = 0.06 + \Delta H_{box} + 0.16$

$\Delta H_{box} = 1.23$ m.

and: $Q = 0.82 \times (6.0 \times 1.6) \times \sqrt{2g \times \Delta H_{box}} = 38.7 \text{ m}^3/\text{s}$

With this Q the previous calculations of velocity and energy heads has to be repeated until, by iteration, a best fit Q is found.

For our example it is found that $Q = 39.1 \text{ m}^3/\text{s}$

Now in Figure V - 4.11 the energy line and the water surface can be constructed.

$Q = 39.1 \text{ m}^3/\text{s}$

$$v_i = \frac{39.1}{40.53} = 0.96 \text{ m/s} \qquad \Delta H_{exp} = 0.14 \text{ m}$$

$$v_{box} = \frac{39.1}{6.0 \times 1.6} = 4.07 \text{ m/s} \qquad \Delta H_{con} = 0.05 \text{ m}$$

it yields: $H'_i = H_i + \Delta H_{exp} = 1.90 + 0.14 = 2.04$ m

$H'_o = H_o - \Delta H_{con} = 3.35 - 0.05 = 3.30$ m

At cross-section I :

$$\left.\begin{aligned} H'_i &= 2.04 = h'_i + \frac{(v'_i)^2}{2g} \\ v'_i &= \frac{39.1}{(h_i + 0.25) \times 7.8} \end{aligned}\right\} \begin{aligned} h'_i &= 1.70 \text{ m} \\ v'_i &= 2.56 \text{ m/s} \end{aligned}$$

At cross-section II :

$$\left.\begin{aligned} H'_o &= 3.30 = h'_o + \frac{(v'_o)^2}{2g} \\ v'_o &= \frac{39.1}{(h'_o + 0.30) \times 8.2} \end{aligned}\right\} \begin{aligned} h'_o &= 3.21 \text{ m} \\ v'_o &= 1.36 \text{ m/s} \end{aligned}$$

To check if at any stage supercritical flow will occur, the Froude number at the box entrance is calculated:

$$F = \frac{v}{\sqrt{gh}} = \frac{4.07}{\sqrt{9.8 \times 1.6}} = 1.0$$ at the box exit the flow is critical. This means that no definite jump will occur and since there is ample expansion possibility for the flow, no additional energy dissipating measures are necessary. The maximum velocity that will occur in the drainage channel to the sluice in case of flushing operation will thus be :

$$v_i = \frac{Q}{A_{ch}} = \frac{39.1}{40.53} = 0.96 \text{ m/s}$$

In case this velocity appears to be too high, the channel profile has to be enlarged and the calculations have to be repeated.

The transition of flow from the box exit to the profile of the bottom drainage channel is provided by the apron and the area with protection.

The velocity at the end of the apron is determined by the flaring angle of the wingwalls and the length of the apron. The wingwall flaring is determined by :

$$\tan \alpha = \frac{1}{3F} \quad \text{(F = Froude number)} = \frac{v}{\sqrt{gh}} = \frac{2.56}{\sqrt{9.82(1.70+0.25)}}$$

$$\tan \alpha = \frac{1}{1.75} \quad : \text{ choose } 1/2$$

For our example the length of the apron is 4.5 m (see Figure V - 4.11). The width of the country side apron at the end of the apron is thus 12.30 m (see Figure V - 4.11).

At the end of the apron the flow velocity of $v'_i = 2.56$ m/s will then be reduced to $v''_i = 1.49$ m/s.

Computation goes as follows :

$$H'_i = h'_i + \frac{(v'_i)^2}{2g} = 2.04 \text{ m}$$

$$H''_i = H'_i - \Delta H_{exp}$$

$$\Delta H_{exp} = 0.68 \times \frac{(v'_i - v''_i)^2}{2g} \quad \text{(see ANNEX V - 4).}$$

$$Q = b \times v \times h$$

$$39.1 = 12.3 \times v_i'' \times (h_i'' + 0.25)$$

From these equations it follows that : $h_i'' = 1.88$ m

$v_i'' = 1.49$ m

$H_i'' = 1.99$ m

In order to reduce velocity further down to an acceptable value of 0.8 m/s, the length of the apron and the retreading wingwalls could be extended further. However, it is more economic to end apron and wingwalls at the toe of the embankment and construct a further smooth transition to the eventual channel profile by means of an adequate bottomprotection that can resist the determined currents.

The bottomprotection should be designed to resist currents upto 1.49 m/s. For details of the bottomprotection, reference is made to paragraph 5.5.4; Volume III, Chapter 5 dealing with revetments. The length of the bottomprotection in the channel direction, measured from the end of the apron should be equal to the bottom width of the drainage channel or 10 times the waterdepth, which ever is the greater.

Note: As shown the velocity in the box will exceed the maximum value of 3.5 m/s, of course it would be possible to design the sluice in such a way that even flushing velocities occuring during mal-operation can be sustained without causing any significant damage.

The frequent reported damages due to scouring of the drainage channel section at the country side of the sluice is probably a result of such mal-operation.

For instance, if the polder water level has decreased to 1.2 m below the ground level, which is quite normal in case of tidal drainage in the winter season, and then the flap gates are fixed in open position at low tide to let in water in the next high tide, the currents in the drainage channel will be very high because the tide is rising faster than the water level in the polder can follow.

To reduce velocities sufficiently the capacity of the drainage channel would have to be far greater than required for drainage.

4.2.7 Maximum velocities during drainage operation

Maximum drainage velocity will occur when the polder water level is at maximum stage and the outer water is at minimum tide level (LLW). In fact this condition will only occur in exceptional circumstances. Normally the polder water level near the sluice will start to fall as soon as the sluice starts to discharge. A backwater curve will develop in the drainage channel.

In our example the following boundary values have been adopted for the water levels (see paragraph 4.2.5 page 51).

country side : + 1.30 m at the end of the drainage channel.

river side : LLW = 0.9 m below PWD

The flow through the sluice in this situation is sketched in Figure V - 4.12).

The flow condition will be (5) and thus: (see Figure V - 4.12).

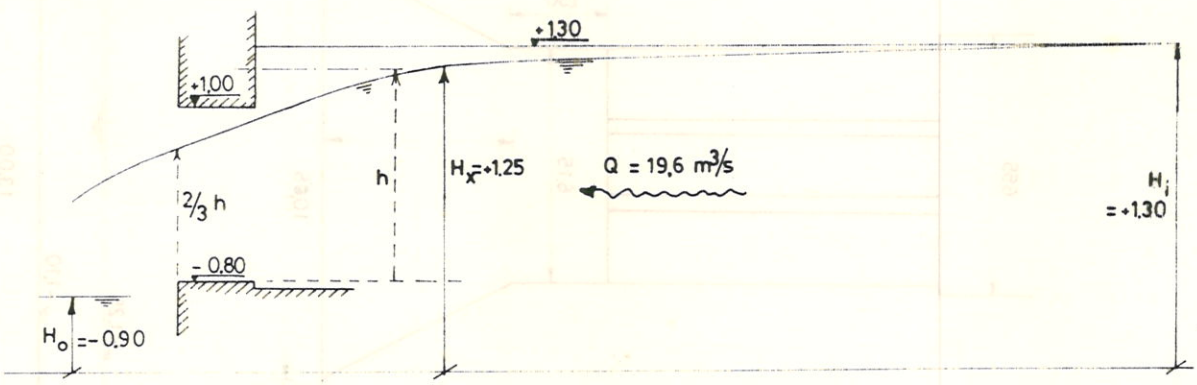

Figure V - 4.12 Flow condition with draw-down curve during maximum drainage situation.

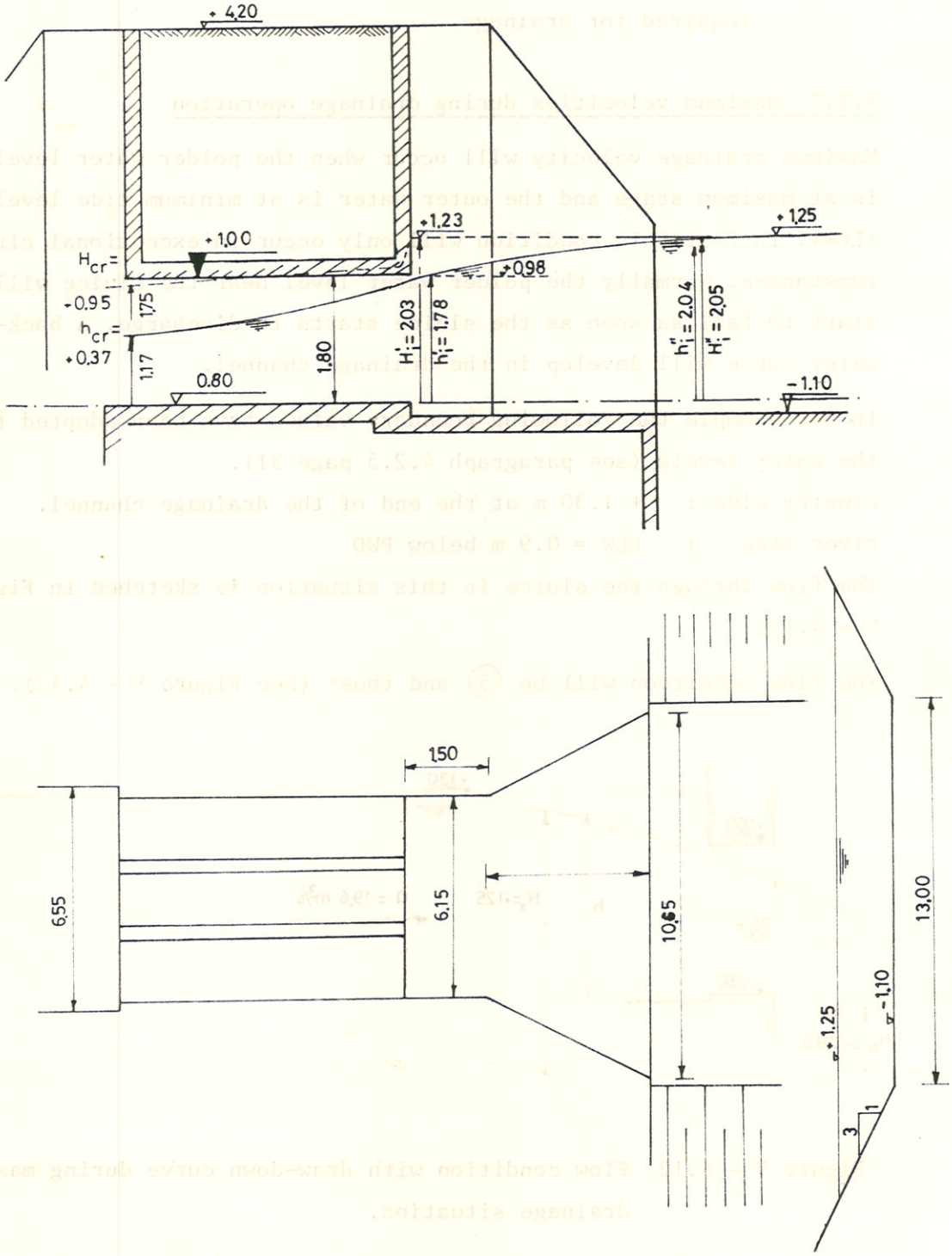

Figure V - 4.13 Flow condition during maximum drainage flow.

In the drainage channel near the sluice : (see Figure V - 4.13).

$$Q''_i = 19.6 \text{ m}^3/\text{s}$$

$$H''_i = 1.25 \text{ m} + |-1{,}10 \text{ m}| = 2.35 \text{ m}$$

$$A = 47.1 \text{ m}^2$$

$$v''_i = 0.42 \text{ m/s}$$

$$\frac{(v''_i)^2}{2g} = 0.01 \text{ m}$$

$$h''_i = 2.34 \text{ m}$$

By calculating the energy head losses in the same way as in paragraph 4.2.6, the velocity and waterdepth at the box entrance can be computed.

$$\Delta H_{con} = k_{con} \times \frac{(v'_i)^2}{2g} = 0.06 \times \frac{(v'_i)^2}{2g}$$

$$H_i = h'_i + \frac{(v'_i)^2}{2g} = H''_i - \Delta H_{con}$$

$$Q'_i = v'_i \times h'_i \times b'_i = 19.6 \text{ m}^3/\text{s}$$

$$v'_i \times h'_i = \frac{19.6}{4.95} = 3.96 \text{ m}^2/\text{s}.$$

From these equations it follows that : $H'_i = 2.03$ m

$h'_i = 1.78$ m

$v'_i = 2.22$ m/s.

It appears that the energy loss due to the contraction of the flow from the channel profile to the profile just in front of the box is only 0.02. Therefore it is not necessary to compute a new discharge for the sluice in which this energy loss is considered. The calculation therefore continues with $Q = 19.6$ m^3/s.

Because of the low tail water the sluice will act as a weir and at the box exit, where the discharge control is, critical depth will occur :

$$q = \frac{19.6}{4.95} = 3.96 \text{ m}^2/\text{s}.$$

$$h_{cr} = \sqrt[3]{\frac{q^2}{g}} = 1.17 \text{ m}$$

$$v_{cr} = \sqrt{g.\ h_{cr}} = 3.39 \text{ m/s}$$

$$H_{cr} = 1.75 \text{ m}$$

The maximum velocity in the box will be : $v_{max} = 3.39$ m/s.

At the box uxit there are two options for the flow to continue :

- 1. The flow makes a drop to reach immediately the head level of the outer water.
- 2. The river side apron is at slightly depressed level (invert level minus 0.3 m) to allow sufficient space for the flap gate operation, and is continuing upto the toe of the embankment.

In the first case a provision has to be designed to still the water jet which falls from the box exit.

In the second case the flow velocity is first decreased on the expanding apron with flaring wingwalls. At the end of the apron it has to be checked whether the discharge per unit width has sufficiently decreased to make a transition to the natural channel with or without a stilling basin or other energy dissipating measures.

The two cases are further elaborated in the following paragraphs.

4.2.8 Drop of flow at barrel exit, stilling basin design

The flow makes the drop to the lower energyhead of the outfall channel straight after the box exit. A stilling basin has to be designed using the graph presented as Figure V - 4.14.

$$q = \frac{19.6}{6.55} = 2.99 \text{ m}^2/\text{s}.$$

Energyhead at box-exit $H_i = 1.75 + 0.15 = 1.90$ m (see Figure V-15). (+ 0.15 m is taken to have a convenient reference - plane).

downstream energyhead $H_2 = 0.05$ m.

For the use of the graph of Figure V - 4.14, the following values

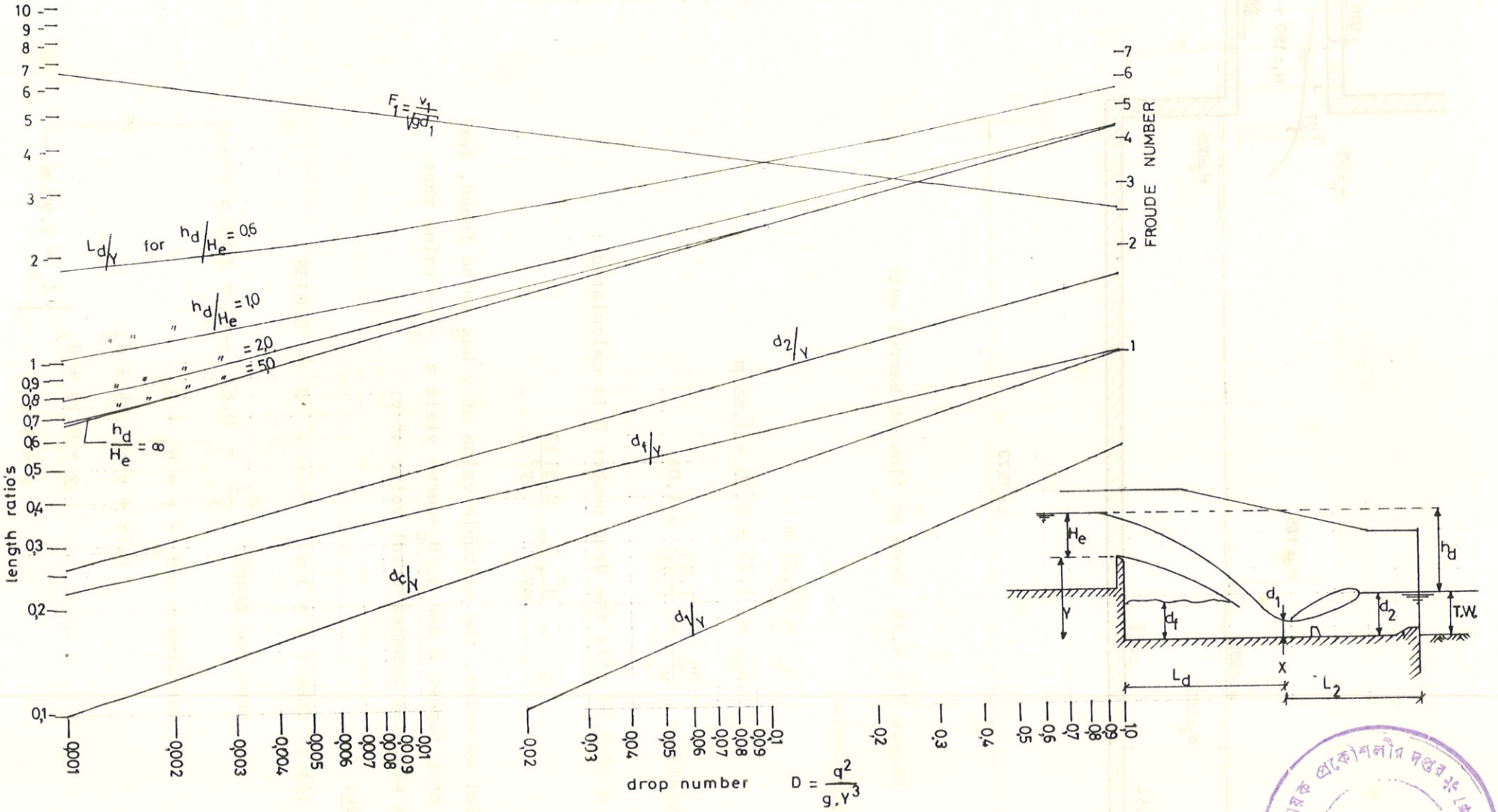

Figure V - 4.14 Hydraulic characteristics of strait drop of flow. (ref. 7)

তত্ত্বাবধায়ক প্রকৌশলীর দপ্তর
ডিজাইন সার্কেল

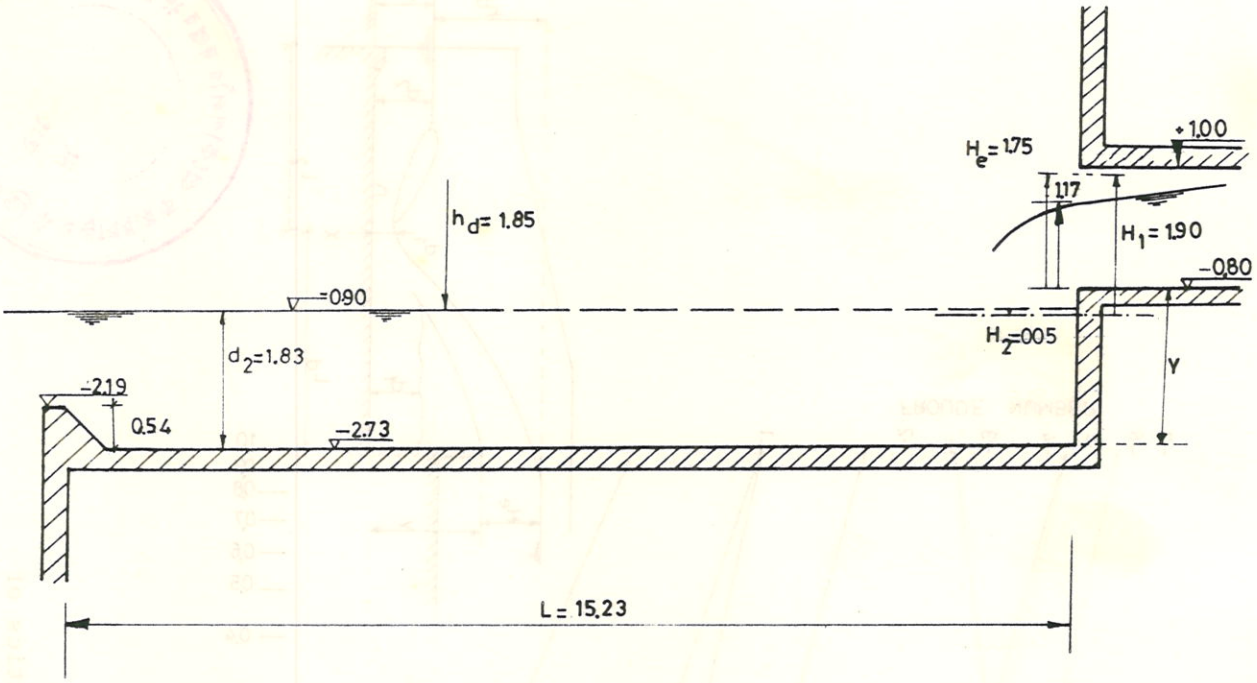

Figure V - 4.15 Drop of flow at barrel exit

are applicable.

$$H_e = 1.75 \text{ m}$$

$$h_d = 1.75 + 0.10 = 1.85 \text{ m}$$

This yields : $\dfrac{h_d}{H_e} = \dfrac{1.85}{1.75} = 1.06$

For a q of 2.99 m^2/s the drop number D is calculated :

$$D = \frac{q^2}{gy^3} = \frac{0.9137}{y^3}$$

By trial an error, the suitable value of y has to be found, for which drop number D and h_d/H_e-curve yield a $\dfrac{d_2}{y}$ - value that agrees with the assumed trial value of y.

<u>example</u>:

trial (1) : take : y = 3 m $\qquad$ D = 0.0338

from the graph: $\dfrac{d_2}{y} = 0.67 \longrightarrow d_2 = 2.01$ m

but also : $H_e + y = h_d + d_2$

$$1.75 + y = 1.85 + d_2$$

$$\left.\begin{aligned} y &= 0.10 + d_2 \\ y &= 3 \text{ m} \end{aligned}\right\} d_2 = 2.90 \text{ m}$$

$\neq$

trial (2) : take $y = 2.50$ $\quad D = 0.0585$

from the graph: $\frac{d_2}{y} = 0.775 \rightarrow d_2 = 1.94$ m

but also : $y = 0.10 + d_2$, $y = 2.50$ m $\Big\} \; d_2 = 2.40$ m

$\neq$

trial (3) : take $y = 1.93$ m $\quad D = 0.1271$

from the graph : $\frac{d_2}{y} = 0.95 \rightarrow d_2 = 1.83$

but also : $y = 0.10 + d_2$, $y = 1.93$ m $\Big\} \; d_2 = 1.83$

$=$

If the elevation of the tailwater is at 0.90 m - PWD then the bottom of the stilling basin should thus be at 2.73 m - PWD.

The length of the basin can be found as follows

From the graph of Figure V - 4.14 it is found that $\frac{L_d}{y} = 2.68$,

for $\frac{h_d}{H_e} = 1.06$ and $D = 0.1271$

It follows that $L_d = 2.68 \times y = 2.68 \times 1.93 = 5.17$ m.

The additional length L_2 can be found from Figure V - 4.16 and the Froude number as calculated for point X in Figure V - 4.14 :

$$F_1 = \frac{v_1}{\sqrt{gd_1}} \longrightarrow \frac{d_1}{y} = 0.223$$

$$d_1 = 0.223 \times 1.93 = 0.43$$

$$F_1 = \frac{q_1/d_1}{\sqrt{gd_1}} = \frac{2.99/0.43}{\sqrt{9.8 \times 0.43}} = 3.39$$

From Figure V - 4.16 it follows : $\frac{L_2}{d_2} = 5.5$

$$L_2 = 5.5 \times 1.83 = 10.06 \text{ m}$$

The total length of the stilling basin is then :

$$5.17 \text{ m} + 10.06 \text{ m} = 15.23 \text{ m}$$

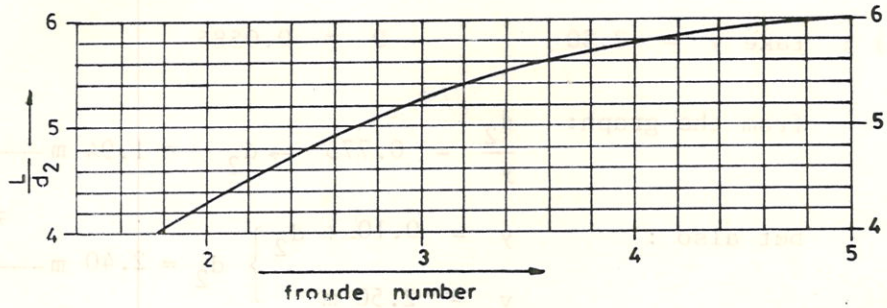

Figure V - 4.16 Length of hydraulic jump.

The height of the sill at the end of the stilling basin should be $1.25 \times d_1$ or, in this case $1.25 \times 0.43 = 0.54$ m.

The lay-out of the construction could then be as shown in Figure V - 4.17.

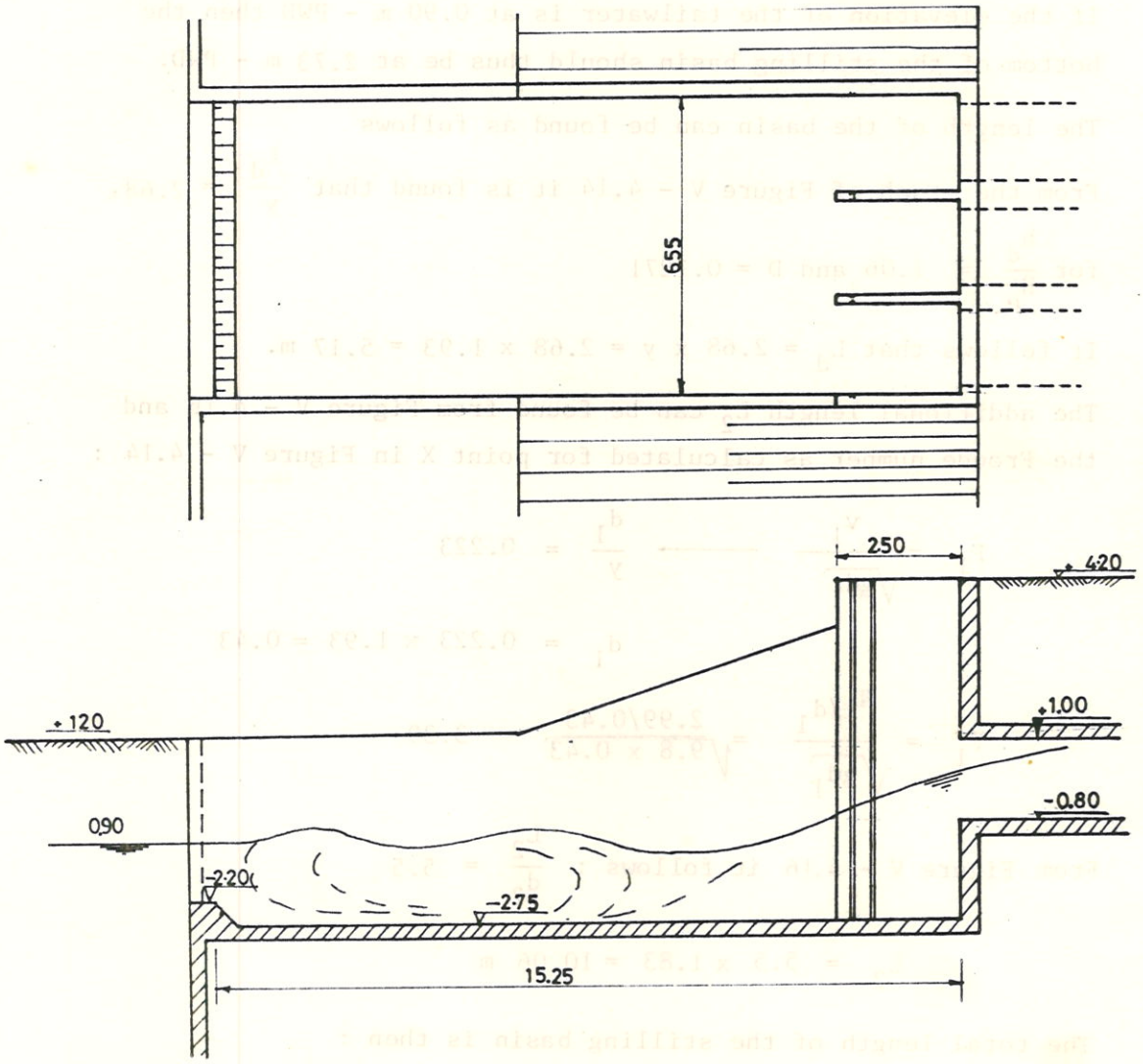

Figure V - 4.17 Lay out of stilling basin

The dimensions of the outfall channel are now to be determined. According to the outline presented in Chapter 1, paragraph 1.3.2, the ratio b/h should be 3 and side slopes 1:3. At the tail water elevation of 0.9 m - PWD this would yield an outfall channel bottom at 2.90 m - PWD and bottom width 6 m. However, the width of the stilling basin is 6.55 (equal to the width of the sluice, see Figure V - 4.17) and the sill depth is at (- 2.73 m + 0.54 m) ≈ 2.20 m - P.W.D.

The channel and bottom protection are now designed as follows. The bottom protection beyond the sill will be constructed at the same level as the sill(2.20 - PWD). The water depth will be in this case be 2.20 - 0.90 = 1.30 m. The required profile for a maximum velocity of 0.8 m/s and a discharge of 19.6 m^3/s is $24\frac{1}{2} m^2$. The bottom width of the channel with 1.30 m waterdepth and 1:3 slopes should then be 15 m.

If excavation allows, it would be better to provide a profile which is more in concert with the ultimate natural profile of the unprotected part of the outfall channel. If excavation to a depth of 2.90 m - PWD is possible then the solution could be as shown in Figure V - 4.18.

For the design of the protection layer reference is made to Volume III. In any case the bottom protection should be of a flexible type as to be able to follow any scour that may develop.

As can be seen, a very big excavation has to be made and high wingwalls have to be constructed. Therefore it seems a better solution first to decrease the flow velocity via the apron which is at slightly lower elevation than the box-invert. The widening of the apron by the flaring wingwalls causes the discharge per unit width to decrease. This alternative solution is discussed in the following paragraph.

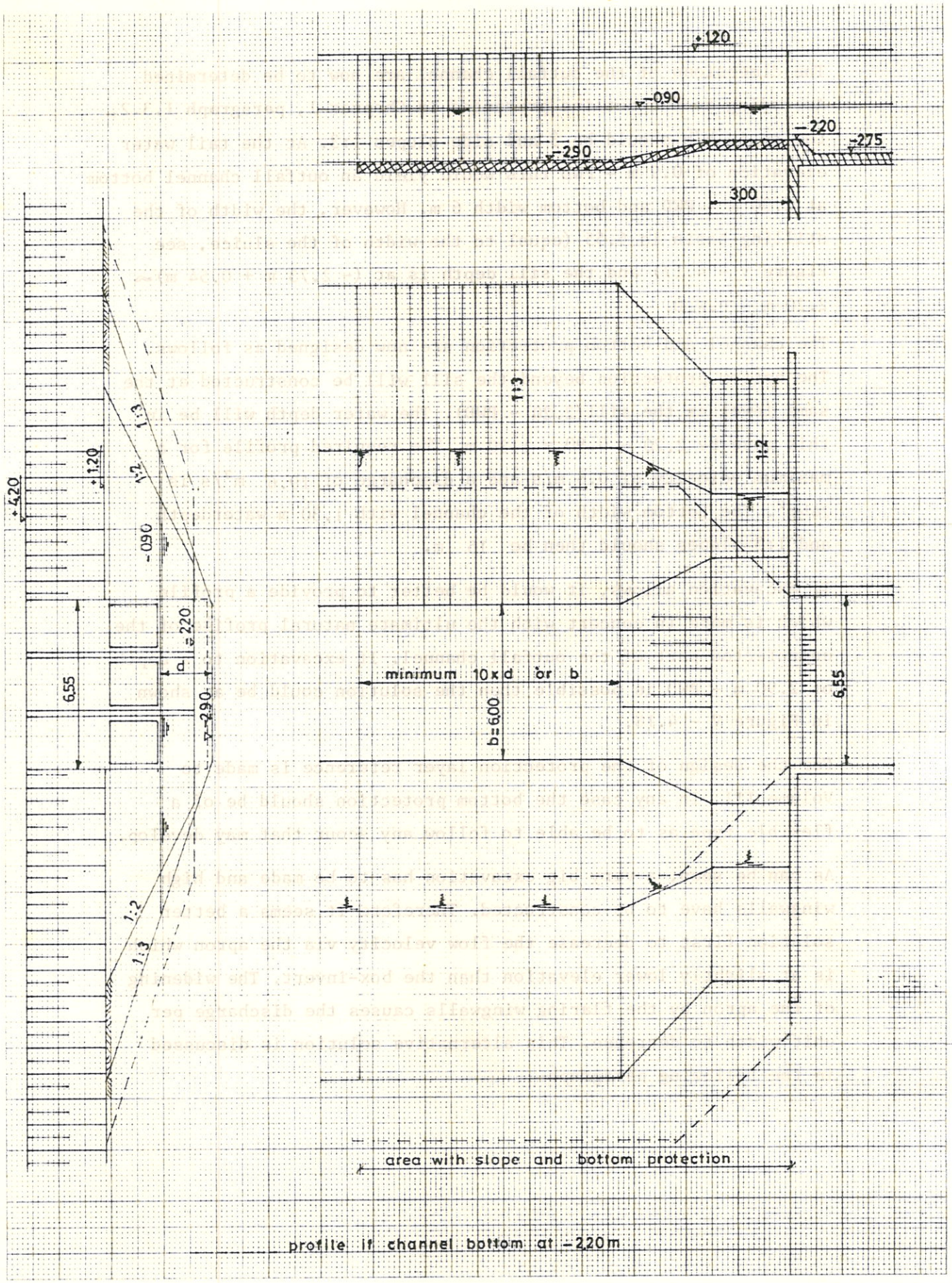

Figure V - 4.18 Lay-out of bottom and slope protection for a sluice with a stilling basin.

4.2.9 Drop of flow at end of apron, baffle block design

At the box exit the floor level is making a drop of 0.3 m and at the same time the profile is widened to 6.55. The profile is further widened between flaring wingwalls upto the end of the apron. Energy losses due to this expansion are analysed as follows (see Figure V - 4.19).

From box-exit to the point were the wingwalls provide further widening :

$$H_{exp} = 0.82 \times \frac{(v_{cr} - v'_o)^2}{2g} \quad \ldots\ldots \text{ (see ANNEX V - 4)}$$

$$H'_o = H_{cr} - H_{exp} = 1.75 - 0.82 \frac{(3.39 - v'_o)^2}{2g} = h'_o + \frac{(v'_o)^2}{2g}$$

Continuity of flow : $(h'_o + 0.3) \times v'_o \times 6.55 = 19.6 \text{ m}^3/\text{s}$

yields that : $\left.\begin{array}{l} h'_o = 1.48 \text{ m} \\ v'_o = 1.68 \text{ m/s} \end{array}\right\} H'_o = 1.62 \text{ m}$

Checking the Froude number $F = \frac{v}{\sqrt{gh}}$ yields $F = \frac{1.68}{\sqrt{9.8 \times (1.48 + 0.30)}} = 0.40$

so subcritical flow.

Expansion of the flow on the apron continues between the flaring wingwalls.

Required wingwalls flaring : $\tan\alpha = \frac{1}{3F}$ = take 1:1½

Length of apron is 6.80 m, thus the width of the apron at the end is 15.61 m.

The flow at the end of the apron is calculated as follows :

$$H''_o = H'_o - H_{exp} = 1.62 - 0.78 \frac{(v'_o - v''_o)^2}{2g} = h''_o + \frac{(v''_o)^2}{2g}$$

$$1.62 - 0.78 \frac{(1.68 - v''_o)}{2g} = h''_o + \frac{(v''_o)^2}{2g}$$

continuity of flow : $v''_o \times (h''_o + 0.30) \times 15.61 = 19.6 \text{ m}^3/\text{s}$

it follows that : $\left.\begin{array}{l} h''_o = 1.57 \text{ m} \\ v''_o = 0.68 \text{ m/s} \end{array}\right\} H''_o = 1.55 \text{ m (PWD+0.75)}$

At the end of the apron the following situation is now created :

The discharge per unit width is $q = \frac{19.6}{15.6} = 1.25$ **m²/s.**

Considering the edge of the apron as a weir crest, the energy head above the crest is then calculated as :

$$H_1 = h_{cr} + \frac{(v_{cr})^2}{2g} = 1.5 \sqrt[3]{\frac{q^2}{g}} = 0.82 \text{ m.}$$

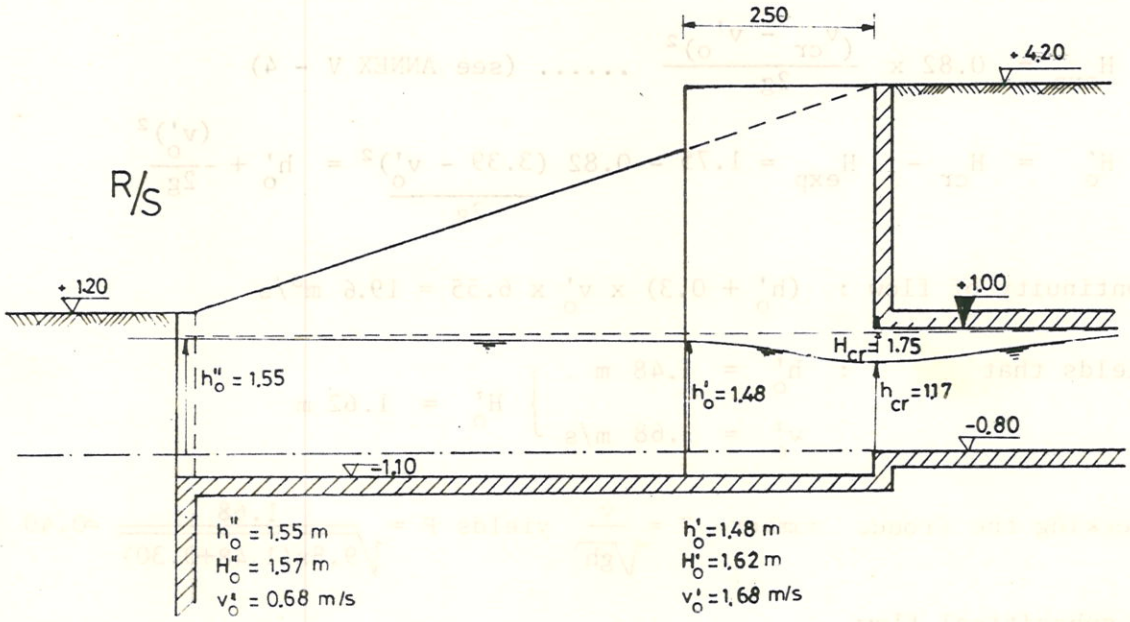

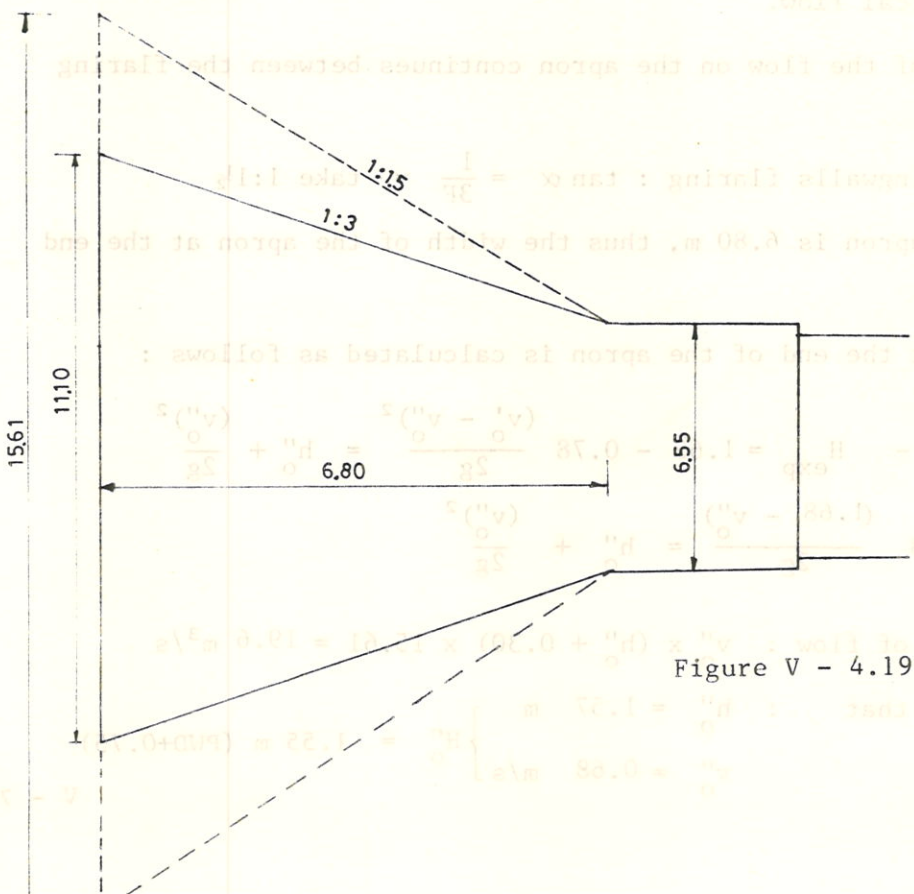

Figure V - 4.19 Flow on r/s apron during maximum drainage flow.

However H_1 was calculated to be 1.57

It is clear that this energy head cannot be attained and consequently a draw - down will form from the barrel exit to the apron and the flow on the apron can be calculated exactly with analyses of energy losses and water level and flow velocities can thus be calculated, but the result will not contribute essentially to the solution of the problem. It is therefore assumed that the flow on the r/s apron is just critical (F = 1) and the flaring of the wingwalls should thus not exceed 1:3.

The width of the apron at the edge becomes thus : $6.55 + (\frac{6.80 \times 2}{3}) =$ 11.10 m and the discharge per unit width :

$$q = \frac{19.6}{11.10} = 1.77 \text{ m}^2/\text{s}$$

resulting in an energy head of H_1 = 1.02 m at the edge. At the downstream section. (see Figure V - 4.20), the energy head remains H_2 = 0.20 m.

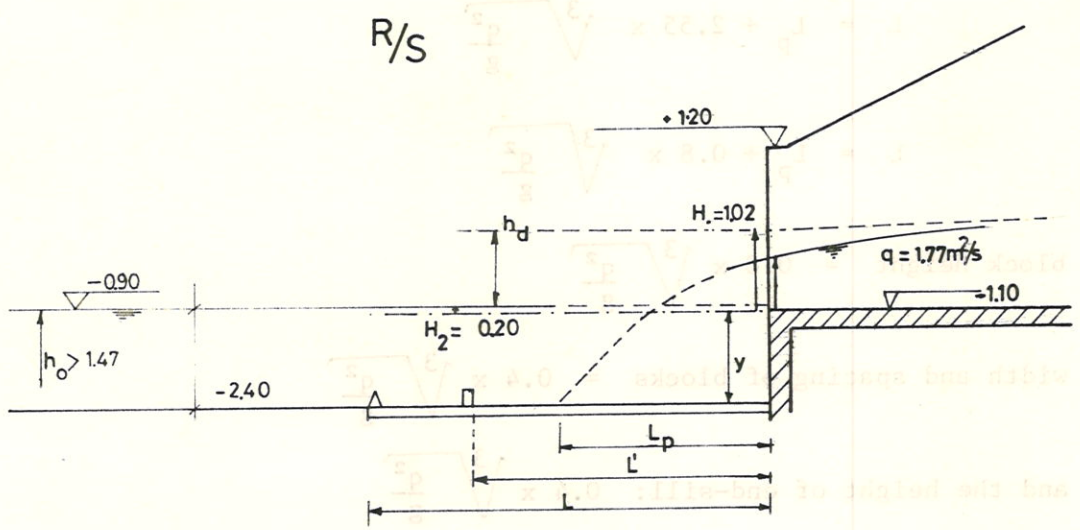

Figure V - 4.20 Flow situation at the end of the apron at lowest tailwater depth.

For the drop which the flow has to make now at the end of the apron, a stilling basin could be designed in the same way as in paragraph 4.2.8. However, since the head-difference and the discharge per unit width are relatively small, a solution can be applied using an impact block basin.

The dissipation of energy is now not taking place by means of a generated hydraulic jump, but by turbulencies induced by collision of the oncoming flow against the blocks.

A condition for the application of the baffle block solution is that the tailwater depth should be :

$$h_o \geqslant 2.15 \times \sqrt[3]{\frac{q^2}{g}}$$

If this condition is not met, then the stilling basin solution should be applied.

Figure V - 4.20 gives the layout of a baffle block solution, which should have the following dimensions :

$$L = L_p + 2.55 \times \sqrt[3]{\frac{q^2}{g}}$$

$$L = L_p + 0.8 \times \sqrt[3]{\frac{q^2}{g}}$$

block height $= 0.8 \times \sqrt[3]{\frac{q^2}{g}}$

width and spacing of blocks $= 0.4 \times \sqrt[3]{\frac{q^2}{g}}$

and the height of end-sill: $0.4 \times \sqrt[3]{\frac{q^2}{g}}$

Figure V - 4.21 shows a nomogram from the U.S. Bureau of Land Reclamation for the relation between q, L_p and y.

For our example: check tailwater : $h_o \geqslant 2.15 \times \sqrt[3]{\frac{q^2}{g}} = 1.47$ m

$$\frac{h_d}{H_e} = \frac{(1.02-0.20)}{1.02} = \frac{0.82}{1.02} = 0.804$$

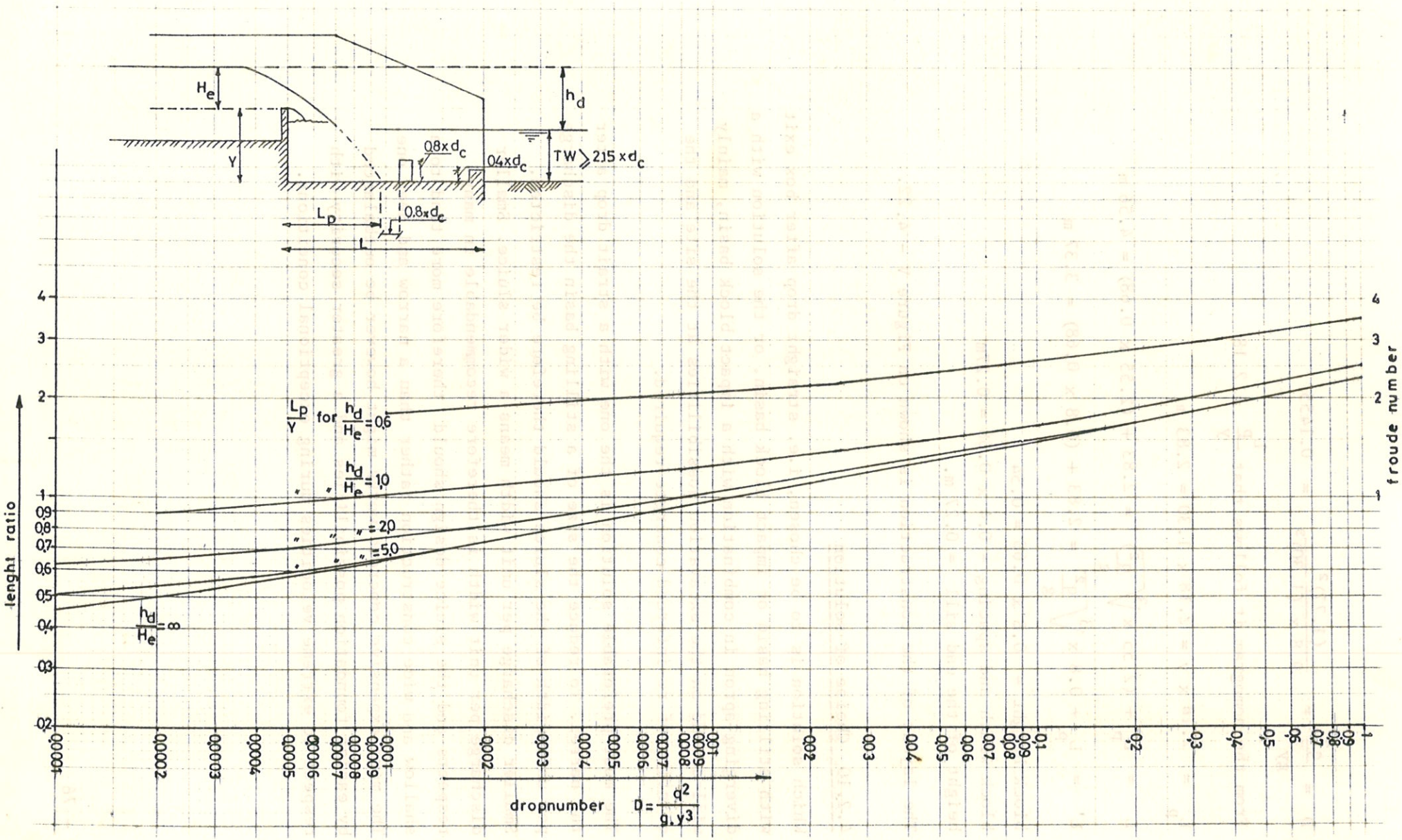

Figure V - 4.21 Hydraulic characteristics of straight drops with impact blocks (ref. 7).

$$D = \frac{q^2}{gy^3} = \frac{(1.77)^2}{9.8 \times (1.30)^3} = 0.1455$$

From the nomogram it follows that $\frac{L_p}{y} = 2.18$

$$L_p = 2.18 \times y = 2.18 \times 1.30 = 2.83 \text{ m}$$

$$L = L_p + (2.55 \times \sqrt[3]{\frac{q^2}{g}}) = 2.83 + (2.55 \times 0.68) = 4.56 \text{ m}$$

$$L' = L_p + 0.8 \times \sqrt[3]{\frac{q^2}{g}} = 2.83 + (0.8 \times 0.68) = 3.37 \text{ m}$$

block height = 0.8 x 0.68 = 0.54

block width and spacing = 0.4 x 0.68 = 0.27m

height of the end sill = 0.27 m.

The layout of the construction is shown on Figure V - 4.22.

4.2.10 Choise of solution

Which solution is to be chosen, i.e. straight drop after box exit with stilling basin or impact block basin, or the solution with a diverging apron in combination with a impact block basin, mainly will depend on the excavation possibilities at the site and the quantity of re-inforced concrete required.

The most preferable solution is the one with a strait drop after the barrel. To reduce the size of a stilling basin the discharge per unit width of the sluice should therefore be restricted. Smaller discharge per unit width means a wider sluice. Smaller discharge per unit width is therefore recommendable in many respects and the sluice design should therefore more tend to a shallow and wide construction rather than a narrow and deep one. The more expensive concrete works might however be outbalanced by easier foundation possibilities and a greater security with respect to extreme velocities during exceptional conditions.

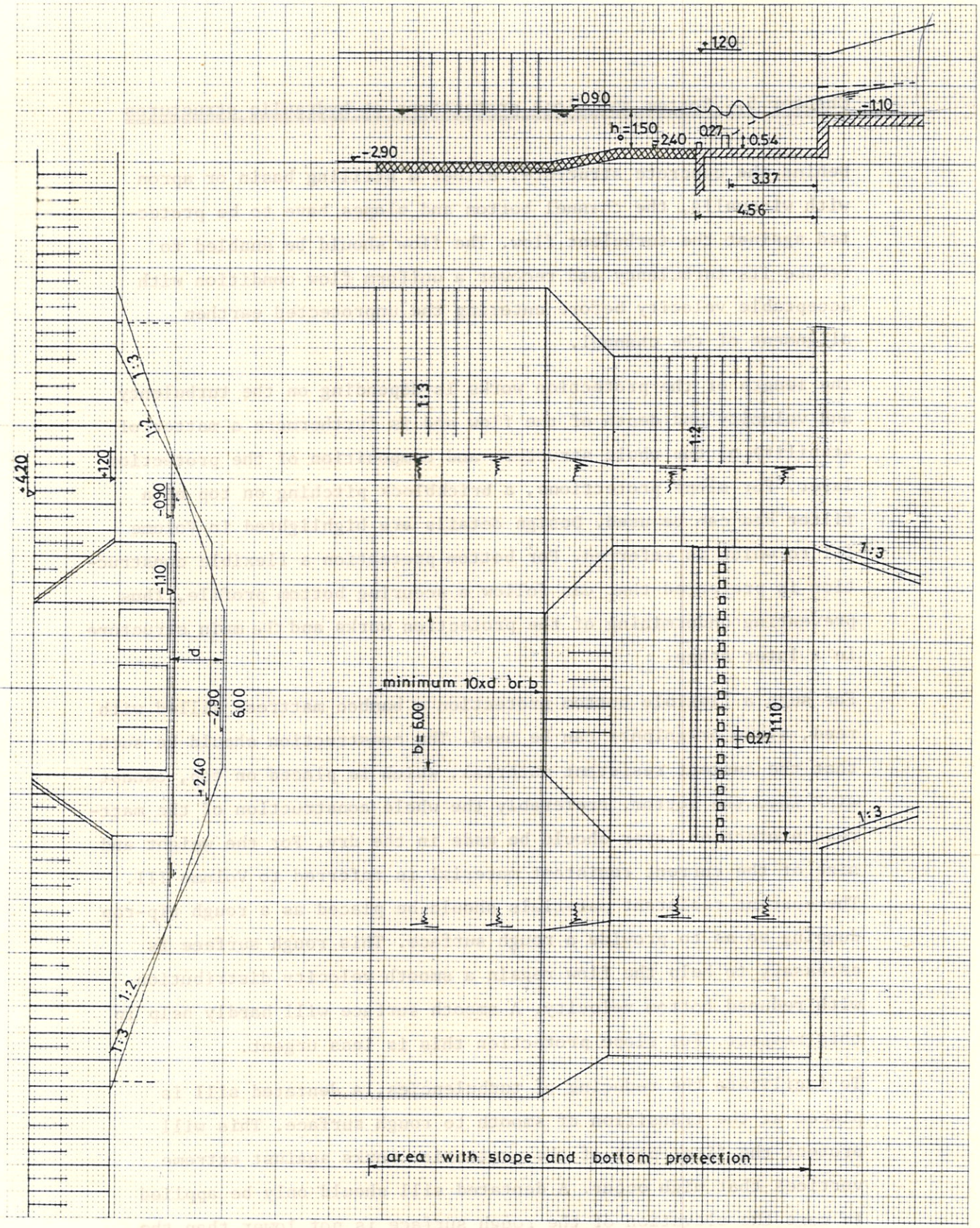

Figure V - 4.22 Lay-out of bottom and slope protection for a drainage sluice with apron and depressed baffle block floor.

Chapter 5. Bottom and slope protections at hydraulic structures

Behind the concrete structure, either a stilling basin or apron with wingwalls, the channel bottom and slopes have to be protected against the turbulent flow. The flow should be enabled to reduce its turbulency and recover a uniform flow condition with acceptable velocity before entering the unprotected earthen alignment of the channel.

The length of the protection works is depending on the turbulency and velocity and depth of the flow and is furthermore a matter of stability of the whole structure and composition of the protection layer. For slope protections, a brickblock pitching on top of a filter bed can be used. Design details are highlighted in Volume III to which is referred. For bottom protection a flexible construction is preferred that can follow a scouring bottom profile, thus preventing undermining of the protection works and the main structure in a later stage.

For such a flexible bottom protection a bamboo mattress filled with reed, straw or golpata can be used. The construction should be such that the current resistant material, which is placed on top, cannot sink into the bottom. Preferably the whole construction of the mattress protection layer should be made in the dry. For the weight and size of the current resistant material is referred to Volume III. The current resistant materials should be placed as a rough rip-rap dumping so as to provide a rough surface. This rough surface is necessary to help the flow regain a smooth velocity distribution with reduced bottom velocity. A smooth surface will hardly help in this respect. For slope protection this is less urgent.

To facilitate the reducing of turbulencies, a dentated sill is placed at the transition of smooth to rough surface. This will protect the first part of the protection works against extreme vortices that migh occur. A dentated sill should only be applied in case the elevation of the rough surface is not lower than the smooth surface.

Dimensions of a dentated sill are shown in Figure V - 5.1. In some cases, the solution of an impact block basin behind the apron may not be possible. For instance at sluices where the old protection layers have been scoured away and the erosion has reached dangerous depths close to the concrete structure. Even if filling up of the erosion hole is possible, this will not form a proper foundation for a impact block basin. In such cases the bottom-protection has to be constructed against the end of the apron or cut-off wall. Depending on the shape of the scour hole, it may be constructed sloping downwards. In Volume III, Chapter 5 an example of such erosion-repair work of the bottom and slope protection is given in Figure III - 5.10.

The bottom area of the channel, that should be provided with a protection layer has to have a minimum dimension in the direction of the sluice axis, equal to the bottom width of the channel or the width of the apron edge or ten times the waterdepth at critical conditions, whichever of the three dimensions is the biggest.

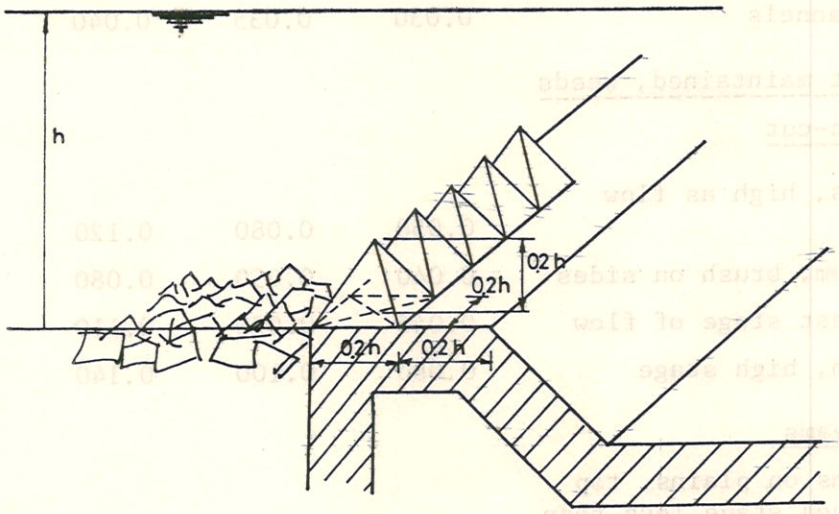

Figure V - 5.1 Dimensions of dentated sill.

ANNEX V - 1. MANNING'S ROUGHNESS COEFFICIENTS (n)

	minimum	normal	maximum
1. Pipes:			
- metal, wood, plastic, cement, precast concrete, asbestos cement	0.010	0.013	0.015
- masonry	0.025	0.030	0.035
2. Excavated channels:			
a. Earth, straight and uniform			
- clean, recently completed	0.016	0.018	0.020
- clean, after weathering	0.018	0.022	0.025
- with short grass, few weeds	0.022	0.027	0.033
b. Earth, winding and sluggish			
- no vegetation	0.023	0.025	0.030
- grass, some weeds	0.025	0.030	0.033
- dense weed or aquatic plants in deep channels	0.030	0.035	0.040
c. Channels not maintained, weeds and brush un-cut			
- dense weeds, high as flow depth	0.050	0.080	0.120
- clean bottom, brush on sides	0.040	0.050	0.080
- same, highest stage of flow	0.045	0.070	0.110
- dense brush, high stage	0.080	0.100	0.140
3. Natural streams			
(minor streams on plains, top width at flood stage less than 30 m)			
- clean, straight full stage, no rifts or deep pools	0.025	0.030	0.033
- same, but more stones and/ or weeds	0.030	0.035	0.040
- clean, winding, some pools and shoals	0.033	0.040	0.045

mannings roughness coefficient	minimum	normal	maximum
- same, with some weeds and/ or stones	0.035	0.045	0.050
- same, lower stages, more ineffective slopes and sections	0.040	0.048	0.055
- Sluggish reaches, weedy deep pools	0.050	0.070	0.080
- very weedy reaches, deep pools	0.075	0.100	0.150

ANNEX V - 2. NOMOGRAPH FOR MANNING'S FORMULA

In the Figures A - V - 2.1 to 2.6 some nomographs are presented for the Manning formula

$$Q = \frac{1}{n} . A . R^{2/3} . S^{\frac{1}{2}}$$

- Figure A - V - 2.1

  With the hydraulic gradient S on the vertical axis and the curve corresponding with the selected value for the roughness coefficient, the value for $\frac{1}{n} . S^{\frac{1}{2}}$ is found on the horizontal axis.

- Figure A - V - 2.2

  With the design discharge on the vertical axis and the value $\frac{1}{n} . S^{\frac{1}{2}}$ as found in the previous step, the value for $A.R^{2/3}$ is found on the horizontal axis.

- Figure A - V - 2.3 to 2.5

  Choose the nomograph for the side slope which corresponds with the selected side slope. With the value for $A.R^{2/3}$ as determined in the previous step, a range of combinations for water depths and bottomwidths is found.

  Select the combination with approximately the best hydraulic section as described in paragraph 1.3 of Volume V. If the waterdepth for economical or practical reasons is determined this value should be used and the corresponding bottomwidth is determined.

- Figure A - V - 2.6

  With this graph the velocity can be determined using the value for the hydraulic radius on the vertical and the curve for the value of $\frac{1}{n} . S^{\frac{1}{2}}$ found in Figure A - V - 2.1.

  Example

  $Q = 0.80 \ m^3/sec$

  $S = 0.0004 \ m/m = 4 \times 10^{-4} \ m/m$

  $n = 0,025$

  side slope 1 : 1.5

- from Figure A - V - 2.1 : $\frac{1}{n} \cdot S^{\frac{1}{2}} = 0.8$

- in Figure A - V-2.2 :

$$\left.\begin{array}{l} Q = 0.80\ m^3/sec \\ \frac{1}{n} \cdot S^{\frac{1}{2}} = 0.8 \end{array}\right\} A \cdot R^{2/3} = 1.0$$

From Figure A - V - 2.4 some possible combinations for water depth and bottomwidth for $A \cdot R^{2/3} = 1.0$ are determined which are presented in the following table together with the $\frac{b}{h}$ ratio.

Table A - V - 1

Water depth (m)	bottom width (m)	$\frac{b}{h}$
0.90	0.55	0.61
0.80	0.94	0.18
0.70	1.45	2.07
0.60	2.05	3.42
0.50	3.0	6.0

- Figure A - V - 2.5 :

  For z = 1.5, the ratio $\frac{b}{h}$ for the best hydraulic section is 0.61 (see paragraph 1.3 of Volume V).

  So the first combination (h = 0.90, b = 0.55) gives the best hydraulic section. But for a drainage channel in low lying area a b/h ration of about 2 is more appropriate.

  If the combination h = 0.70 m and b = 1.45 is selected the hydraulic radius R is calculated as follows :

  Bottomwidth b = 1.45 m

  topwidth cross-sectional area = b+ 2 x 1.5 h

  = 1.45 + 3 x 0.70 = 3.55 m

  cross-sectional area = $\frac{\text{bottomwidth + topwidth x h}}{2}$

  $= \frac{1.45 + 3.44}{2} \times 0.70 = 1.75\ m^2$

$$R = \frac{A}{O}$$

O = wetted perimeter = the sum of the length of that part of the channel sides and bottom which are in contact with water.

$$= b + 2 \times h \sqrt{1 + z^2}$$

$$= 1.45 + 2 \times 0.70 \sqrt{1^2 + 1.5^2} = 3.97 \text{ m}$$

$$R = \frac{1.75}{3.97} = 0.44 \text{ m}$$

From Figure A - V - 2.6 :

$$\frac{1}{n} \cdot S^{\frac{1}{2}} = 0.8$$

$$R = 0.44$$

$$v = 0.37 \text{ m/s}$$

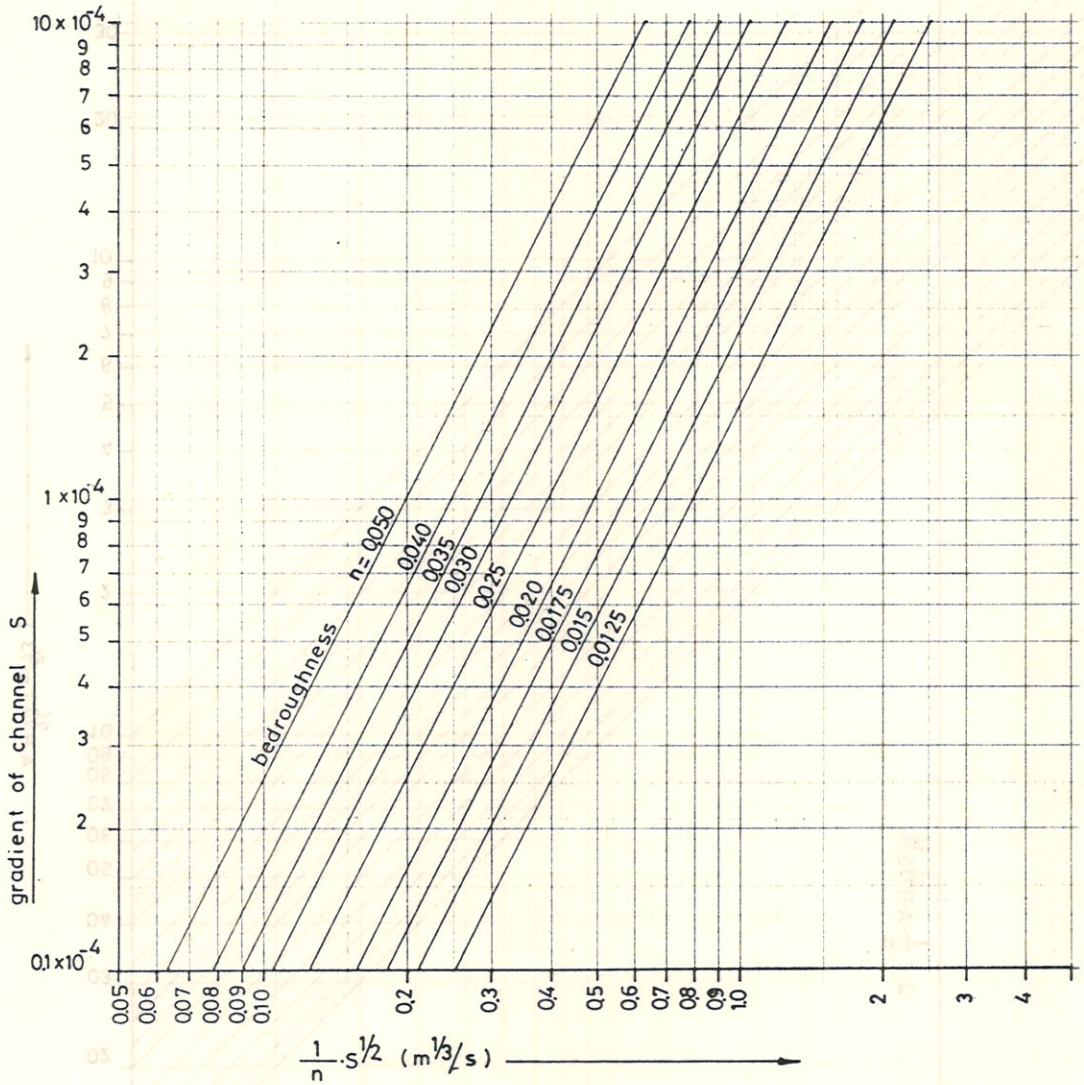
10 x 10⁻⁴
9
8
7
6
5
4
3
2
1 x 10⁻⁴
9
8
7
6
5
4
3
2
0.1 x 10⁻⁴
gradient of channel S
bedroughness
n = 0.050
0.040
0.035
0.030
0.025
0.020
0.0175
0.015
0.0125
0.05
0.06
0.07
0.08
0.09
0.10
0.2
0.3
0.4
0.5
0.6
0.7
0.8
0.9
1.0
2
3
4
1/n · S^1/2 (m^1/3/s)

Figure A.V - 2.1

Figure A.V - 2.2

bottomwidth (m)
waterdepth
h=0.3m
0.4
0.5
0.6
0.7
0.8
0.9
1.0
1.1
1.2
1.3
1.4
1.5
1.6
1.7
1.8
1.9
2.0
2.2
2.4
side slope 1:1
A.R^2/3 (E^8/3)

Figure A.V - 2.3

bottomwidth (m)
A·R^2/3 (m^8/3/s)
side slope 1 : 1.5
waterdepth h = 0.5 m
0.6
0.7
0.8
0.9
1.0
1.1
1.2
1.3
1.4
1.5
1.6
1.7
1.8
1.9
2.0
2.2
2.4
2.6
2.8
3.0
3.2
3.4
3.6
3.8
4.0

Figure A.V - 2.4

Figure A.V - 2.5

hydraulic radius R (m)
velocity v (m/s)
$\frac{1}{n} \cdot S^{1/2}$ (m$^{1/3}$/s)
$v = \frac{1}{n} S^{1/2} \cdot R^{2/3}$
$\frac{1}{n} \cdot S^{1/2} = 0.1$ m$^{1/3}$/s
0.125
0.15
0.175
0.2
0.225
0.25
0.3
0.35
0.4
0.45
0.5
0.6
0.7
0.8
0.9
1.0

Figure A.V - 2.6

ANNEX V - 3 CALCULATION OF BACKWATER CURVE IN THE MAIN DRAINAGE CHANNEL

Given the polder situation as presented in Figure V - 2.1 as repeated here below

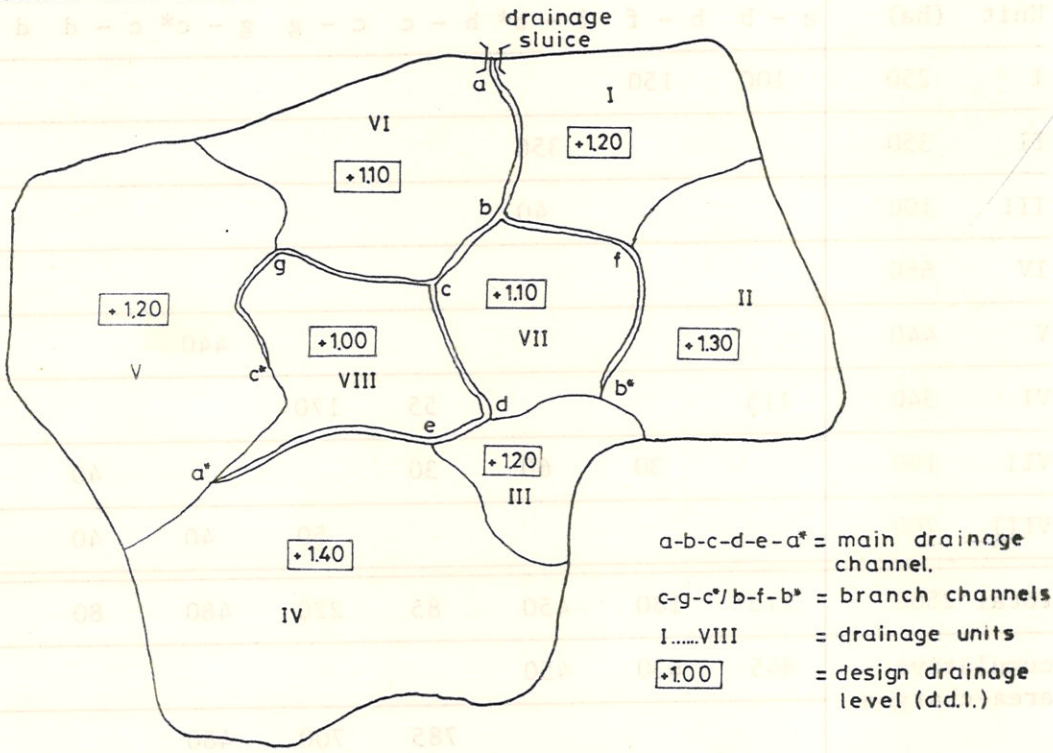

Total polder area : 2500 ha

drainage modules : 30 mm

Drainage flow during discharge period T : Q_{max} = 17,36 m^3/s

(see paragraph 4.2.4). Q_{av} = 14,8 m^3/s

Drainage channel to be checked on maximum flow condition during design drainage level in the channel (highest-discharge-at-lowest-water-level combination).

The area of the polder is subdivided in units which will drain their excess water to the main drainage channel a* - e - d - c - b - a, b* - f - b and c* - g - c.

In the following review it is tabulated which area will drain to

which channel section and what will be the drainage flow in each of the channel-sections during maximum drainage flow.

Unit	area (ha)	drainage channel section								
		a - b	b - f	f - b*	b - c	c - g	g - c*	c - d	d - e	e - a*
I	250	100	150							
II	350			350						
III	100			40					60	
IV	660									660
V	440						440			
VI	340	115			55	170				
VII	160		30	60	30			40		
VIII	200					50	40	40	20	50
total	2500	215	180	450	85	220	480	80	80	710
cumulative area-charges		845	630	450						
					785	700	480			
		2500	630	450	1655	700	480	870	790	710 ha
discharge at downstream end		17,36	4,37	3,12	11,49	4,86	3,33	6,04	5,49	4,93 m^3/s
average discharge		16,61	3,75	1,68	11,20	4,10	2,02	5,77	5,21	2,70 m^3/s

The result of the last row may be found as well by plotting the discharges of the end of each section in the lay out of the drainage channel and making the ends fit.

The field data for the drainage channels are presented as follows:

Section	a - b	b - c	c - d	d - e	e - a	b - f	f - b*	c - g	g - c*
length (m)	1600	900	1400	600	2300	1200	1400	1400	1100
average bottomslope	$3x10^{-4}$	$4x10^{-4}$	$3x10^{-4}$	$2x10^{-4}$	$1x10^{-4}$	$5x10^{-4}$	$2x10^{-4}$	$4x10^{-4}$	$1x10^{-4}$
average bottomwidth(m)	13	13	10	10	9	10	5	10	5
roughness coeff. n	0.035	0.035	0.035	0.035	0.035	0.035	0.035	0.035	0.035
average sideslopes	← — — —	— — —	1:3	— — —	— — —	— — —	— — —	— — —	— — — →
average Q_{max} discharge	16,61	11,20	5,77	5,21	2.70	3.75	1.68	4.10	2.02

All channels are assumed to have a profile as indicated in the figure below:

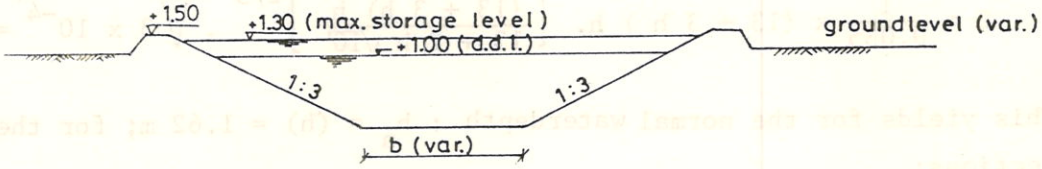

Formulas to be used :

1) $Q = \frac{1}{n} . A . R^{2/3} . S^{\frac{1}{2}}$ for discharge

2) $(\frac{\Delta x}{h})^{0.315} = (\frac{\Delta_o}{h})^{0.315} - 0.408 . \frac{x . S}{h}$ for backwater curve (see par. V - 1.6).

or nomograph

$A = (b + 3 h)h$

$R = A/(b + 2 h \sqrt{10})$

The average bottom profile of the long section of the drainage channel is plotted together with the design drainage level of the units along the drainage channel.

In the critical drainage situation, with no drainage flow, the water level in the drainage channel will be equal to the design drainage level in the lowest unit (+ 1.00 m, unit VIII).

In the flow situation, shortly after the start of the drainage period T, a draw down curve will have developped towards the sluice, of which the only known boundary condition is the water level at a*, which is assumed to have remained on the level of + 1.00 m (design drainage level).

The draw down curve is now calculated from this point a* onwards in downstream direction.

At first the normal water depths in each channel section are calculated with formula 1). These depths are also plotted in the long section profile of the drainage channel.

example: for section (a - b) :

$$Q = \frac{1}{0.035} \times (13 + 3\,h)\,h.\left[\frac{(13 + 3\,h)\,h}{13 + 2\,h\sqrt{10}}\right]^{2/3} . \sqrt{3 \times 10^{-4}} = 16.61 \text{ m}^3/\text{s}.$$

This yields for the normal waterdepth : h_n = (h) = 1.62 m; for the other sections:

	a - b	b - c	c - d	d - e	e - a*	b - f	f - b*	c - g	g - c*
h_n (m)	1.62	1.20	1.02	1.08	0.96	0.70	0.80	0.78	1.06

The next step is to calculate the drawdown curve with the help of formula 2), starting at the assumed boundary condition at a*.

The calculation is demonstrated on Figure A.V - 3.1 . yielding the backwater curve for the assumed flow and water level conditions.

The backwater curve should in all sections be above the normal depth to avoid any draw-down effects restricting the discharge capacity.

The profile of the sections should be adjusted in case this condition is not met.

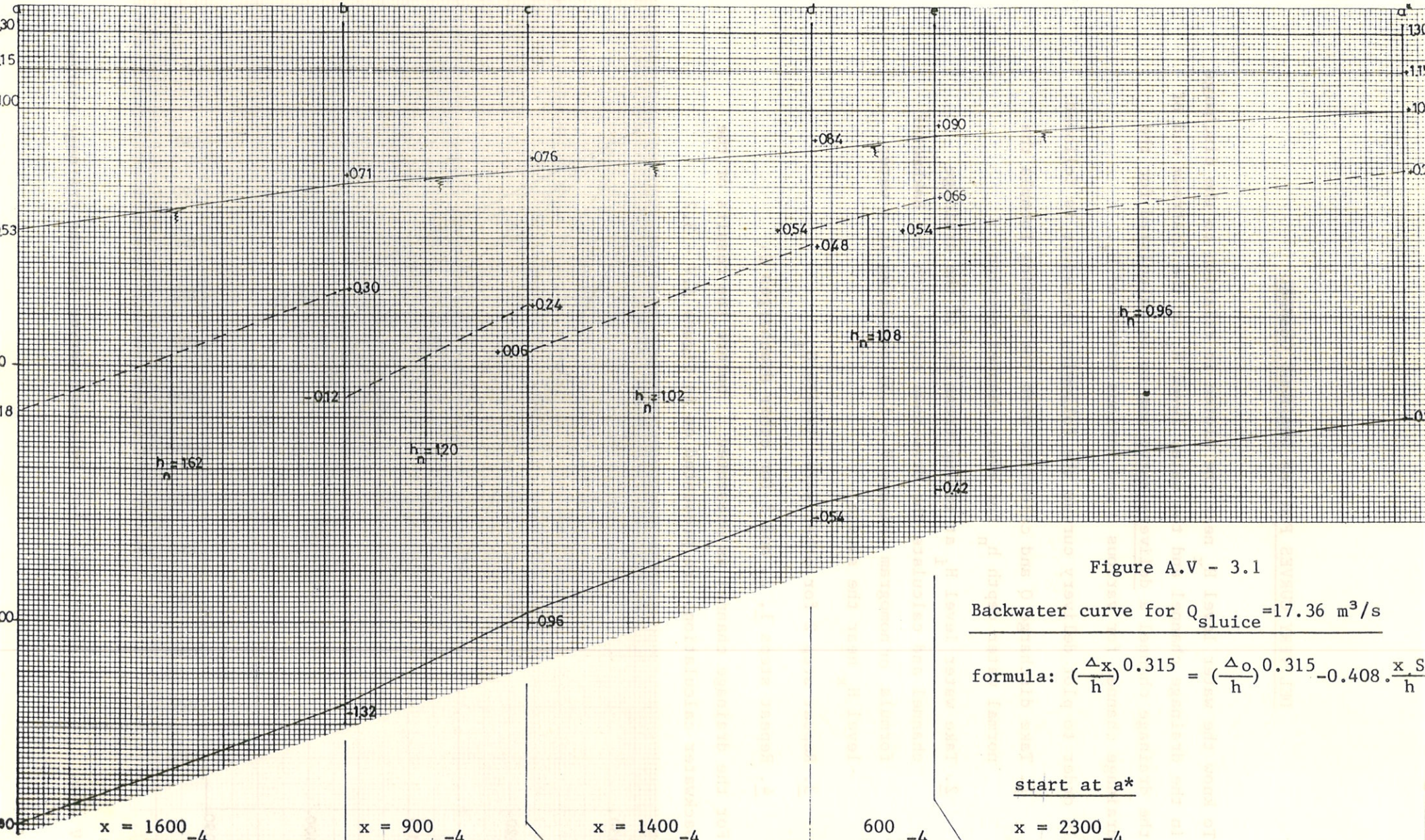

Figure A.V - 3.1

Backwater curve for Q_{sluice}=17.36 m^3/s

formula: $\left(\frac{\Delta x}{h}\right)^{0.315} = \left(\frac{\Delta o}{h}\right)^{0.315} - 0.408 \cdot \frac{x \cdot S}{h}$

x = 1600	x = 900	x = 1400	600	x = 2300
S = 3×10^{-4}	S = 4×10^{-4}	S = 3×10^{-4}	2×10^{-4}	S = 1×10^{-4}
h = 1.62	h = 1.20	h = 1.02	1.08	h = 0.96
Δx = +0.71-0.30=0.41	Δx = +0.76-0.24=0.52	Δx = 0.84-0.48=0.36	0.90-0.66=0.24	Δx = +1.00-0.77=0.23
Δo = 0.71	Δo = 0.83	Δo = 0.70	0.30	Δo = 0.36
h = -0.18+0.71=+0.53	h = -0.12+0.83=+0.71	h = +0.06+0.70=+0.76	0.54+0.30=0.84	

start at a*

water level downstream is:
h=+0.54+ Δo=+0.90.

DELIVERY CURVES FOR THE DRAINAGE CHANNEL

To know the water level H_x near the sluice in relation to the discharge in the drainage channel and the water level H_i at the upstream end of the drainage channel a delivery curve has to be calculated for the drainage channel for various Q and various values of H_i.

In order to plot delivery curves the following procedure is followed:

1. Take discharge Q and calculate with the Manning formula the normal water depth h_n for every channel section.
2. Take water level H_i at the upstream end of the drainage channel and calculate the draw-down curve with the Bakhmetef formula or nomogram (Figure V - 1.5) resulting in a water level H_x near the sluice.
3. Repeat step 2 for other water levels H_i.
4. Repeat steps 1, 2, and 3 for other discharges Q.

For the drainage channel as presented before the results of the backwater calculations are presented on in Figure A.V - 3.2

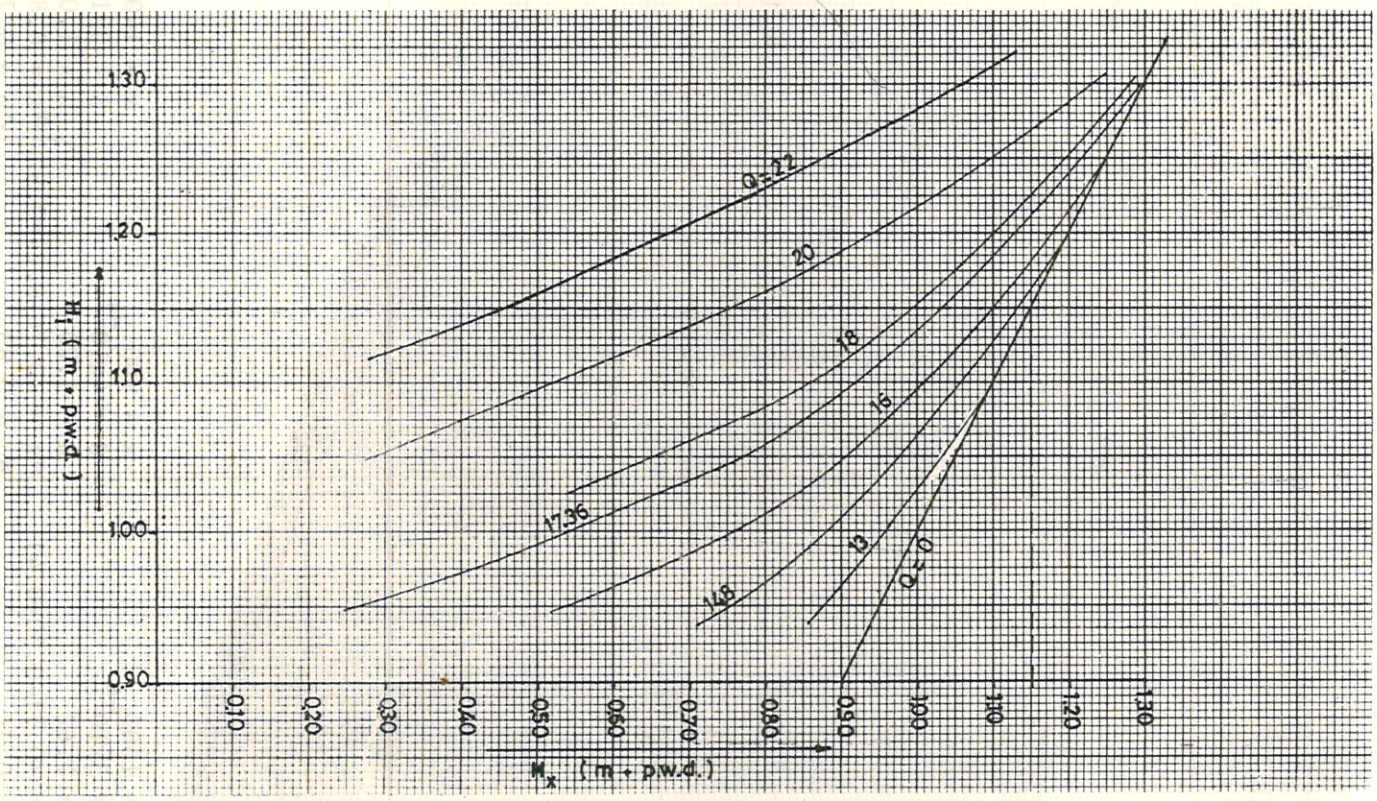

Figure A.V - 3.2 Delivery curves for the drainage channel

WATER LEVELS DURING DRAINAGE PERIOD

In paragraph 4.2.5 the invert level and width of the sluice were determined. The criteria for the invert level was the maximum allowable velocities in the sluice during extreme drainage conditions.

The width of the sluice was determined on the assumption that during the drainage period T the discharge in the channel-sluice system remains constant at Q_{av} = 14.8 m^3/s. The backwater H_x near the sluice was taken from the delivery curves of the drainage channel for values of H_i = 1.13 and H_i = 0.93.

In order to verify the correctress of this simplification the graph of Figure A.V - 3.3 is constructed, in which the sluice discharge is plotted against the upstream head H_x, (assuming flow condition (5)) yielding line 'a', and the channel discharge is plotted for various values of H_x and H_i, yielding the lines 'b'. The latter information in fact is a re-plotting of the delivery curves of the drainage channel (see Figure A.V - 3.2).

Where the line 'a' intersects the lines "b", the discharge through the sluice equals the channel discharge.

It is clearly demonstrated that as the polders water level H_i is decreasing, the discharges are decreasing and the headwater at the sluice is decreasing.

For a equi - Q - inter section point, the horizontal axis of the diagram shows H_x and the line section 'c' indicates the difference at that particular Q between H_x and H_i.

It can be seen that for all equi - Q - intersections, the difference between H_x and H_i remains almost constant between 0.09 and 0.12 m.

This means that the average water level gradient in the drainage channel remains practically constant. It also means that the amount of water between the horizontal polderwater level and the backwater curve does not change very much during the drainage period T.

For the end of the drainage period, we therefore may assume that the polderwater level H_i has dropped to the level at which the drainage volume has been evacuated, i.e. to the level of + 1.15 - 0.27 = 0.88 m. The extra water which has been drained in addition because of the backwater from + 0.88 m to approximately + 0.76 m for H_x near, the sluice is then neglected.

The width of the sluice can now be determined in another way as in paragraph 4.2.5.

1. Average polderwater level during the drainage period T is : ½ (+ 1.15 + 0.88) = 1.02 m.
2. Average backwater effect to the sluice during the drainage period T is ± 0.10 m, yielding an average headwater at the sluice of + 1.02 - 0.10 m = + 0.92 m.
3. Invert level was established at - 0.80 m PWD.
4. Average headwater for the sluice discharge is thus

$$+0.92 + |-0.80| = +1.72 \text{ m.}$$

5. Average sluice discharge :

$$Q = 14.8 \text{ m}^3/\text{s} = 1.35 \times b \times (1.72)^{1.5}$$

$$\longrightarrow b = 4.86 \text{ m.}$$

Initially the sluice width was determined to be b = 4.95 m.

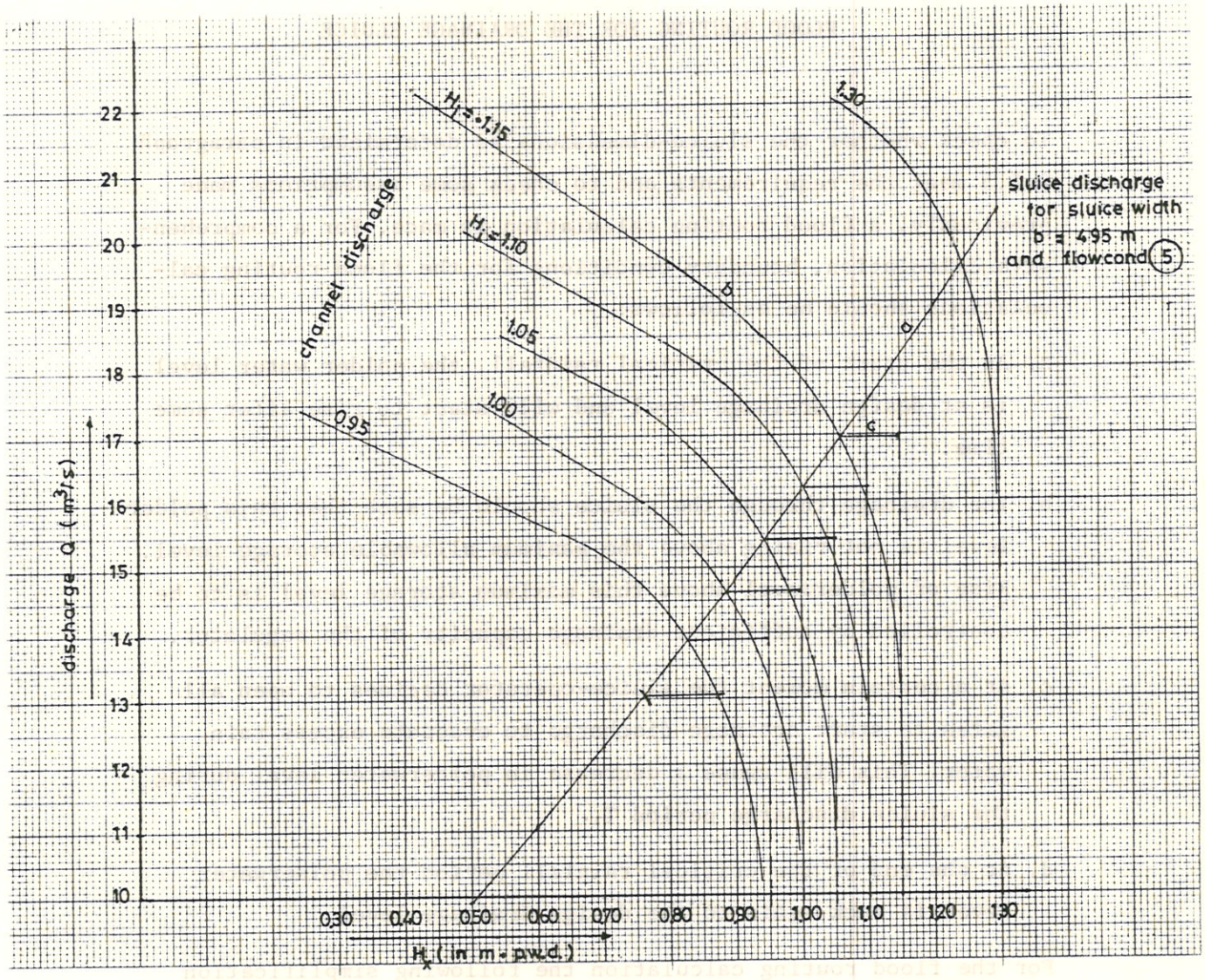
sluice discharge
for sluice width
b = 4.95 m
and flowcond. 5
channel discharge
H_1 = 1.15
H_1 = 1.10
1.05
1.00
0.95
1.20
a
b
c
discharge Q (m^3/s)
22
21
20
19
18
17
16
15
14
13
12
11
10
0.30
0.40
0.50
0.60
0.70
0.80
0.90
1.00
1.10
1.20
1.30
H_x (in m - pwd.)

Figure A.V - 3.3

FLOOD ROUTING FOR THE DRAINAGE SLUICE

To check whether the sluice-dimensions as determined in paragraph 4.2.5 meet the requirements and to check some assumptions made previously, a flood routing calculation is made. For a comprehensive calculation, boundary conditions for the flood routing calculations should be as follows:

a. At the start of the critical rainfall, the polder water level is at design drainage level and will start to rise after some time.

b. The drainage through the sluice should be such that this polder level is not rising above the maximum allowable storage level. Rise of polderlevel above this maximum storage level is to be controlled by sufficient drainage capacity of the regulator.

c. At a certain moment the sluice-operator decides to open all gates to start drainage discharge to evacuate excess rain water. This will cause a decrease in polderwater level during the sluice discharge period T.

d. At the end of the critical rainfall period the polderwater level is back again to the design drainage level.

For the flood routing calculation the following simplification is made :

- The drainage capacity is increasing as the polderwater level is rising and will be maximum at the maximum allowable storage level of the polder water and minimum when polder water level is at design drainage level. Therefore during the critical rainfall period the average required drainage discharge is calculated at the stage that the polderwater level is halfway in between design drainage level and maximum allowable storage level.

- It is furthermore assumed that the first tidal drainage period will start at the same time as the critical rainfall period. In practise, the drainage sluice will only be opened if, after the first rains have raised the polderwater level and the forecasts

indicate more rainfall.

- During the tidal discharge period T a backwater curve will develop in the drainage canal. The effect of this backwater curve on the sluice discharge is considered in the flood routing.

- The storage decrease in the polder during the drainage period T will result in a drop of water levels in the polder. This drop is considered to be planar and the effect of the backwater curve in the main drainage channel is in this respect neglected. The relation between storage area provided by the drainage channels and low pockets against the polderwater level H_i is given in Figure A.V-3.4. The Figure is a graphical interpretation of the information on storage area as presented in paragraph 4.2.5, page V-48/50.

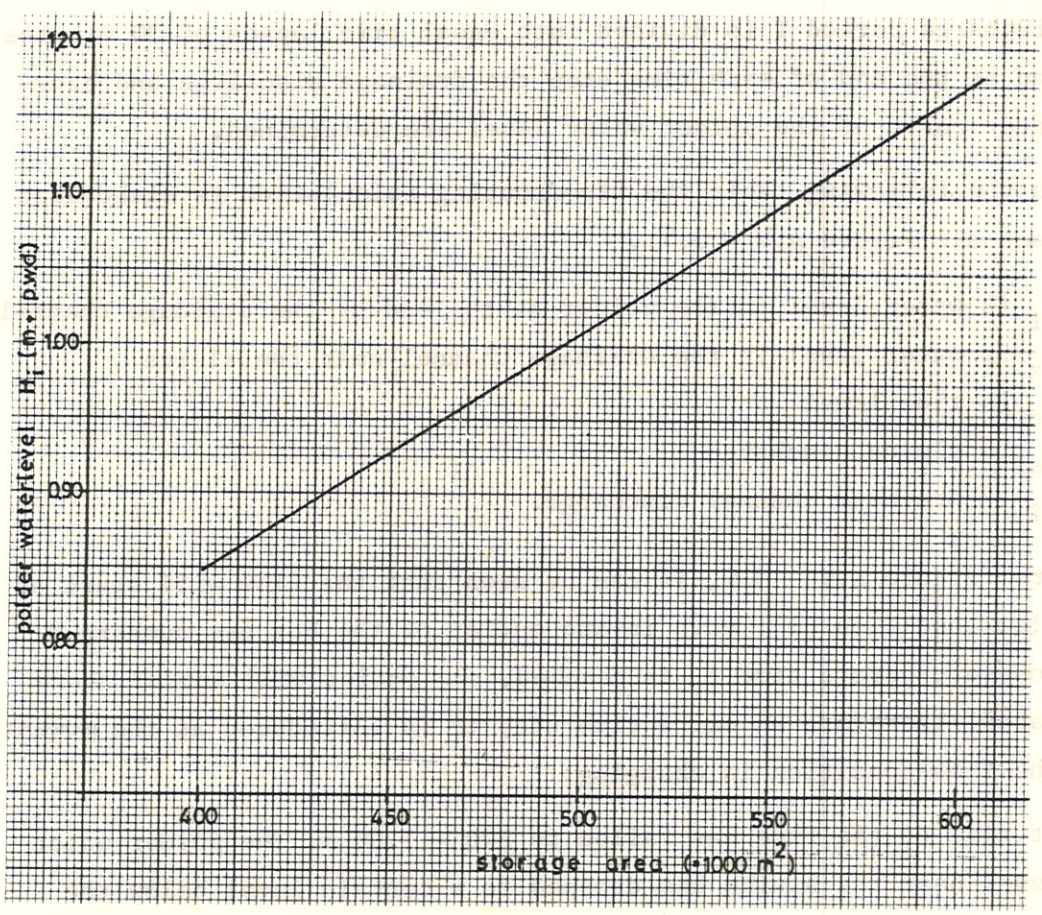

Figure A.V - 3.4

- The total drainage capacity of the sluice during one tidal cycle is compared with the decrease in water storage due to the falling water level H_i in the polder.
- The effect of salinity difference between outerwater and polder water, and the over-pressure required to open the flapgates against the gravity which requires a head-difference of a few centimeters, is not taken into account.

For the calculation example of the floodrouting, the dimensions of the sluice have been taken as calculated in paragraph 4.2.5. To calculate the backwater curve the characteristics of the drainage channel is to be known. In our example the bottom slope S and other features of the drainage channel have been assumed as indicated in ANNEX V - 3. Figure A.V - 3.1.

At time t_o, the tide has fallen to the same level as the polder water level and drainage will start from this moment. The sluice discharge period T is divided into equal time lapses of 30 minutes and at the end of each time step the drainage discharge and backwater curve of the polder water level are determined.

In the following table the floodrouting calculation is elaborated (see als Figure A.V - 3.5).

H_i is water level in the polder at the end of the drainage channel.
H_x is water level in the drainage channel near the sluice
H_o is tide level
Q_{sl} = sluice discharge
Q_i = drainage channel discharge.

From Figure A.V - 3.5, it can be seen that the flow will start as flow condition (1): both in-and outlet of the box are sumberged. However, before time t_1 is reached, the outlet will appear above water. Therefore an extra time step t_1^* is introduced at the moment the flow-condition is changing.

At time t_1^* the tide has fallen to PWD + 1.00 m. The polder water level near the sluice has dropped to a certain level below the original H_i of 1.15 + PWD (see Figure A.V - 3.5). But it is not known how much. The difference between H_o and H_i, being 0.15 m

is formed by a head difference over the sluice, causing a sluice discharge Q_s and a head difference in the drainage channel causing a flow towards the sluice, Q_i. These two discharge have to be equal.

$$Q_s = 0.82 \times d \times B \times \sqrt{2g\,\Delta H} \quad \text{(flow condition 1)}$$

$$= 0.82 \times 1.80 \times 4.95 \times \sqrt{2g \times (H_x - H_o)}$$

$$= 32.3 \times \sqrt{H_x - H_o}$$

The relation between channel discharge and H_i and H_x is presented in the delivery curves of the drainage channel (see Figure A-V-3.3).

The calculation process proceeds as follows:

1. At the beginning of each time step Δt, the tide level outside (H_o), the water level at the end of the drainage channel (H_i), the water level just upstream of the sluice (H_x) and the discharge in this situation ($Q_{s1}=Q_i$) are known.
2. At the end of the time step Δt, the tide level (H_o) is known, the polderwater level (H_i) is estimated, as well as the level (H_x) at the sluice. The corresponding discharge ($Q_{s1}= Q_i$) is determined for this situation.
3. The average discharge in the period Δt is now calculated and multiplied with the duration of Δt to yield the amount of water evacuated through the sluice in the period Δt.
4. The volume of water evacuated in time lapse Δt minus the supply to the drainage channel from the field (= 8,68 m^3/s, see p.V-48) is now divided by the average storage area provided by the drainage channels and low pockets between the level of H_i and + 1.15 m. The decrease in H_i resulting from the drainage during Δt should correpond with the estimated H_i at the end of the time step. (step 2 above). If not, then step 2 should be repeated with a better estimate of H_i and/or H_x.

The first calculation steps (t_o upto t_4) are elaborated hereunder, the whole flood routing calculation is further elaborated in the attached Table A.V - 3.1).

From the results of the floodrouting the following is observed.

1. The estimate drainage period T, assumed to be from the intersection of the level ½(m.a.st.l + d.d.l) and the estimated polder-water level at the end of the drainage period (see p.V-49) is fairly correct, (T = 7.3 hours).

2. The total volume of water discharged through the sluice (361.620 m^3) is some 8% below the requirement. The simplification explained on p.V-50 is the reason for this difference. The average discharge through the sluice during period T (= 13,76 m^3/s) seems to be lower then the average discharge during the stage of critical flow through the sluice (= 14.7 m/s).

3. The maximum occuring discharge is Q = 16,7 m^3/s and is slightly below the assumed maximum of 17,36 m^3/s but fairly in the range if we multiply the actual average discharge of 13.76 with the factor $\frac{1}{0.85}$ yielding for Q_{max} = 16,2 m^3/s (16,7).

4. To bring the sluice upto exact required drainage capacity, the width of the barrels has to be increased by:

$$b = \frac{389.153}{361.620} \times 4.95 = 5.33 \text{ m.}$$

yielding three barrels of 1.80 m wide.

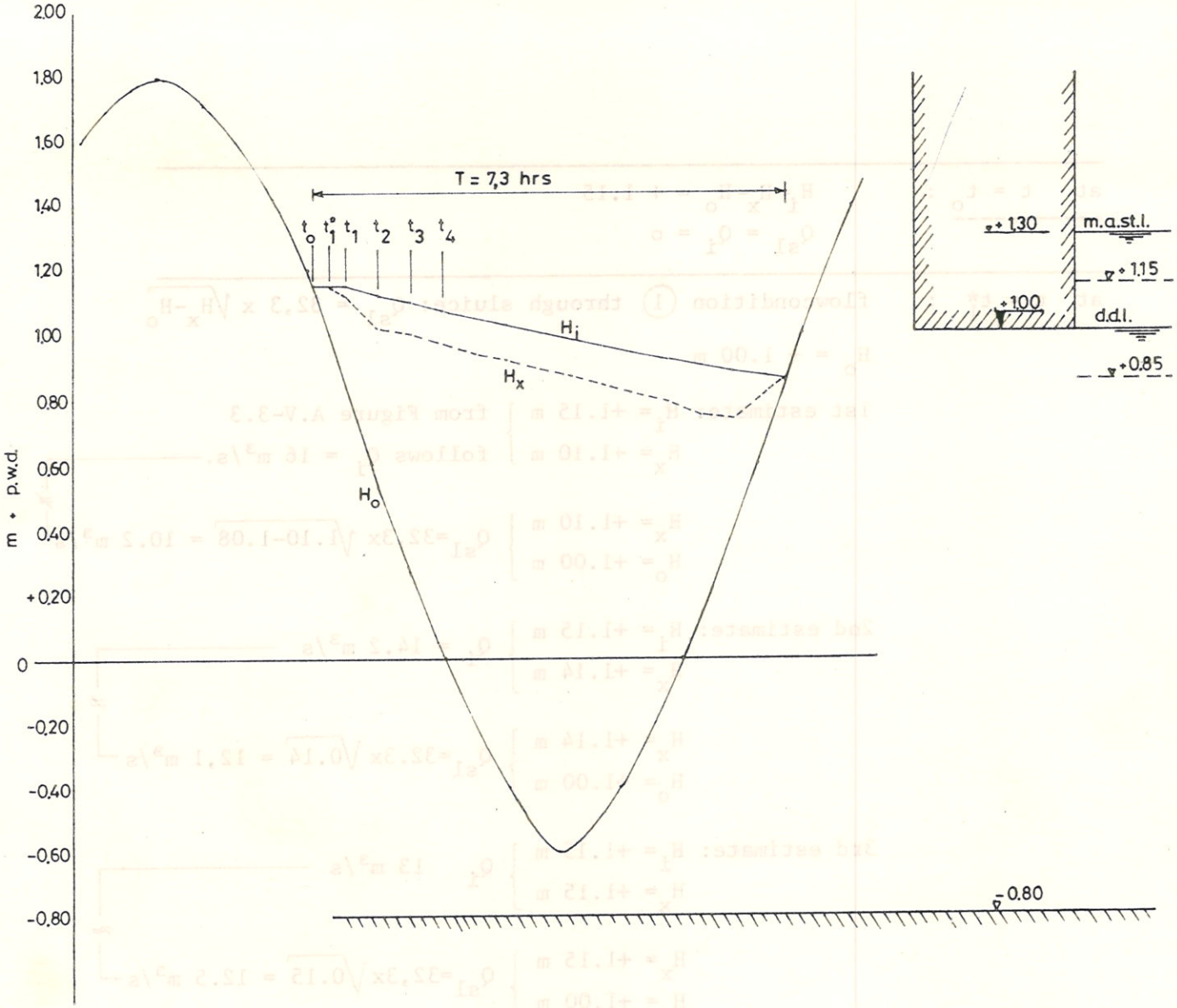
2.00
1.80
1.60
1.40
1.20
1.00
0.80
0.60
0.40
+0.20
0
-0.20
-0.40
-0.60
-0.80
m + p.w.d.
T = 7,3 hrs
t_o t_1^o t_1 t_2 t_3 t_4
H_i
H_x
H_o
+1.30
m.a.st.l.
+1.15
+1.00
d.d.l.
+0.85
-0.80

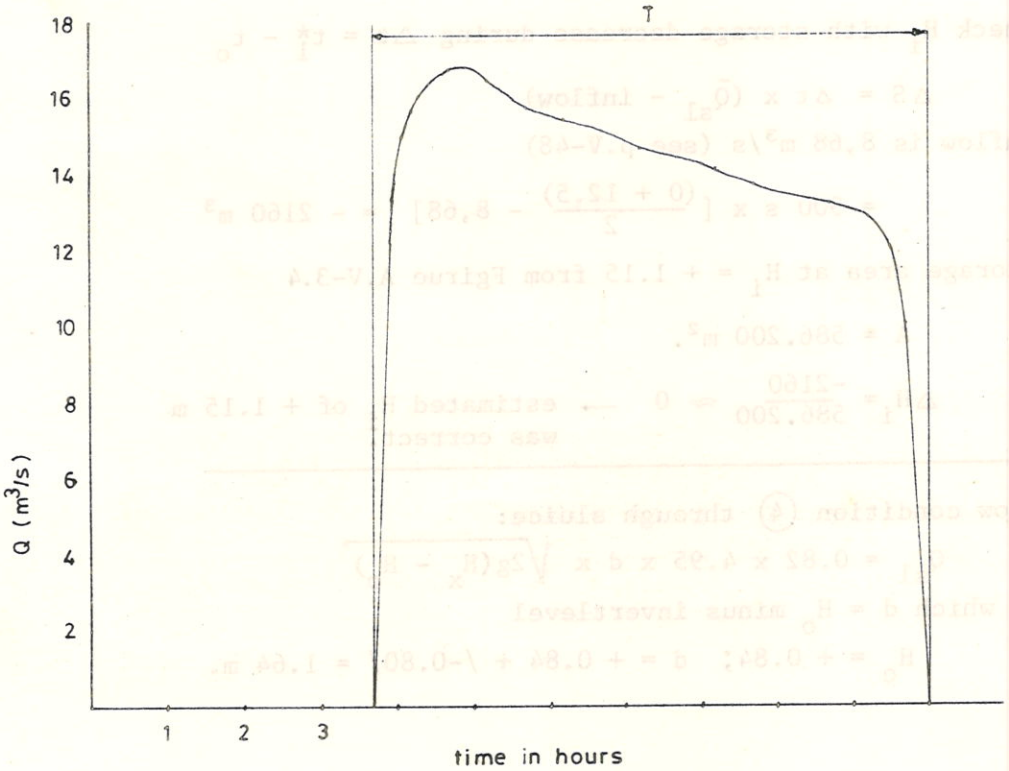
18
16
14
12
10
8
6
4
2
Q (m^3/s)
T
1
2
3
time in hours

Figure A.V - 3.5

at $t = t_o$:

$H_i = H_x = H_o = +1.15$

$Q_{s1} = Q_i = o$

at $t = t_1^*$:

flowcondition (1) through sluice: $Q_{s1} = 32{,}3 \times \sqrt{H_x - H_o}$

$H_o = +1.00$ m.

1st estimate: $H_i = +1.15$ m, $H_x = +1.10$ m } from Figure A.V-3.3 follows $Q_i = 16\ m^3/s$.

$H_x = +1.10$ m, $H_o = +1.00$ m } $Q_{s1} = 32{,}3 \times \sqrt{1.10 - 1.08} = 10.2\ m^3/s$

$\neq$

2nd estimate: $H_i = +1.15$ m, $H_x = +1.14$ m } $Q_i = 14.2\ m^3/s$

$H_x = +1.14$ m, $H_o = +1.00$ m } $Q_{s1} = 32.3 \times \sqrt{0.14} = 12{,}1\ m^3/s$

$\neq$

3rd estimate: $H_i = +1.15$ m, $H_x = +1.15$ m } Q_i 13 m^3/s

$H_x = +1.15$ m, $H_o = +1.00$ m } $Q_{s1} = 32{,}3 \times \sqrt{0.15} = 12.5\ m^3/s$

$\approx$

Check H_i with storage decrease during $\Delta t = t_1^* - t_o$

$$\Delta S = \Delta t \times (\bar{Q}_{s1} - \text{inflow})$$

inflow is 8,68 m^3/s (see p.V-48)

$$= 900\ s \times \left[\frac{(0 + 12.5)}{2} - 8{,}68\right] = -2160\ m^3$$

Storage area at $H_i = +1.15$ from Fgirue A.V-3.4

$$A = 586.200\ m^2.$$

$$\Delta H_i = \frac{-2160}{586.200} \approx 0 \longrightarrow$$ estimated H_i of + 1.15 m was correct.

at $t = t_1$:

flow condition (4) through sluice:

$$Q_{s1} = 0.82 \times 4.95 \times d \times \sqrt{2g(H_x - H_o)}$$

in which $d = H_o$ minus invertlevel

$$H_o = +0.84; \quad d = +0.84 + /-0.80/ = 1.64\ m.$$

1st estimate: $H_i = +1.15$, $H_x = +1.05$ } from Figure A.V-3.3 follows $Q_i = 17.1\ m^3/s$

$H_x = +1.05$, $H_o = +0.84$ } $Q_{s1} = 0.82 \times 4.95 \times 1.64 \times \sqrt{2g(1.05-0.84)} = 13.5\ m^3/s$

$\neq$

2nd estimate: $H_i = +1.15$, $H_x = +1.10$ } $Q_i = 16{,}0\ m^3/s$

$H_x = +1.10$, $H_o = +0.84$ } $Q_{s1} = 6{,}66 \times \sqrt{2g(1.10-0.84)} = 15{,}0\ m^3/s$

$\neq$

3rd estimate: $H_i = +1.15$, $H_x = +1.12$ } $Q_i = 15.3\ m^3/s$

$H_x = +1.12$, $H_o = +0.84$ } $Q_{s1} = 6.66 \times \sqrt{2g(1.12-0.84)} = 15{,}6$

$\approx$

check H_i with storage decrease during $\Delta t = t_1 - t_1^*$

$$\Delta S = \Delta t \times [\bar{Q} - 8{,}68]$$

$$= 900 \times [\frac{(12.5 + 15.5)}{2} - 8{,}68] = 4800\ m^3$$

Storage area at $H_i = +1.15$ m from Figure A.V-3.4

$$A = 586.200\ m^2$$

$$H_i = \frac{-2160 + 4800}{586.200} \approx 0.$$

estimated H_i of + 1.15 m was correct.

---

at $t = t_2$: assume flow condition (4) through the sluice:

$$Q_{s1} = 0.82 \times 4.95 \times d \times \sqrt{2g(H_x - H_o)}$$

in which $d = H_o$ minus invert level.

$H_o = +0.53$; $d = 0.53 + 0.80 = +1.33$ m

$$Q_{s1} = 23{,}9 \times \sqrt{(H_x - H_o)}.$$

1st estimate: $H_i = +1.11$, $H_x = +1.00$ } from Figure A.V-3.3 follows: $Q_i = 16.63\ m^3/s$

$H_x = +1.00$, $H_o = +0.53$ } $Q_{s1} = 23.9 \times 1.00-0.53 = 16{,}39\ m^3/s$

$\neq$

2nd estimate: $H_i = +1.11$, $H_x = +1.01$ $\Big\}$ $Q_i = 16{,}47\ m^3/s$ (from Figure A.V-3.3)

$H_x = +1.01$, $H_o = +0.53$ $\Big\}$ $Q_{s1} = 23.9 \times \sqrt{1.01-0.53} = 16.55\ m^3/s$ $\approx$

check if flow condition (4) still prevails:

$$h_2 \geqslant \sqrt[3]{\frac{q^2}{g}} = 1.04\ m.$$

$h_2 = +0.53 + 0.80 = 1.33 \longrightarrow$ o.k.

check H_i with storage decrease during period $\Delta t = t_2 - t_1$

$$\Delta S = \Delta t \times (\bar{Q} - 8{,}68) = 1800 \times \left(\frac{16.55+15.6}{2} - 8.68\right)$$

$$= 13.310\ m^3.$$

Storage area at $H_i = +1.11$: $A = 561.300\ m^2$

Storage area at $H_i = +1.15$: $A_o = 586.200\ m^2$.

Average $\bar{A} = 573.750\ m^2$

Total storage decrease:

$$\Delta H_i = \frac{\sum \Delta S}{\bar{A}} = \frac{(-2160 + 4800 + 13.310)}{573.750} = 0.028\ m.$$

Start new trial with $H_i = +1.12$

3rd estimate: $H_i = +1.12$, $H_x = +1.00$ $\Big\}$ $Q_i = 17.00\ m^3/s$ (from Figure A.V-3.3)

$H_x = +1.00$, $H_o = +0.53$ $\Big\}$ $Q_{s1} = 23.9 \times \sqrt{1.00-0.53} = 16{,}4\ m^3/s.$ $\neq$

4th estimate: $H_i = +1.12$, $H_x = +1.02$ $\Big\}$ $Q_i = 16.6\ m^3/s$ (from Figure A.V-3.3)

$H_x = +1.02$, $H_o = +0.53$ $\Big\}$ $Q_{s1} = 23.9 \times \sqrt{1.02-0.53} = 16.73\ m^3/s.$ $\approx$

check H_i with storage decrease during period $\Delta t = t_2 - t_1$

$$\Delta S = \Delta t\ (\bar{Q} - 8{,}68) = 1800 \times \left(\frac{16.73+15.6}{2} - 8.68\right) = 13.470\ m^3.$$

Storage area A at $H_i = +1.12 = 567.500\ m^2$

Storage area A_o at $H_i = +1.15 = 586.200\ m^2$

Average storage area $\bar{A}$ = 576.850 m²

Total storage decrease is :

$$\Delta H_i = \frac{\sum \Delta S}{\bar{A}} = \frac{16.110}{576.850} = 0.03 \text{ m} \longrightarrow h_i = \text{o.k.}$$

---

at $t = t_3$: Assume flow condition (4) through the sluice:

$$Q_{sl} = 0.82 \times 4.95 \times d \times \sqrt{2g(H_x - H_o)}$$

in which $d = H_o$ minus invert level.

$H_o = +0.26$; $d = 0.26 + 0.80 = 1.06$ m

$$Q_{sl} = 19.05 \sqrt{(H_x - H_o)}$$

1st estimate: $\left.\begin{array}{l} H_i = +1.10 \\ H_x = +1.00 \end{array}\right\}$ $Q_i = 16{,}3 \text{ m}^3/\text{s}$

$\left.\begin{array}{l} H_x = +1.00 \\ H_o = +0.26 \end{array}\right\}$ $Q_{sl} = 19.05 \sqrt{1.00 - 0.26} = 16{,}39 \text{ m}^3/\text{s}$. $\approx$

check H_i with storage decrease during period $\Delta t = t_3 - t_2$:

$$\Delta S = \Delta t\,(\bar{Q} - 8.68) = 1800 \times \left(\frac{16.39 \times 16.73}{2} - 9.68\right) = 14.180 \text{ m}^3$$

Storage area A at H_i = + 1.10 is: 555.500 m²

Storage area A_o at H_i = + 1.15 is: 586.200 m²

Average storage area $\bar{A}$ = 570.850 m²

Total storage decrease is:

$$\Delta H_i = \frac{\sum \Delta S}{\bar{A}} = \frac{30.290}{570.850} = 0.05 \text{ m} \longrightarrow H_i \text{ is o.k.}$$

check flow condition: (4) if $h_2 \geqslant \sqrt[3]{\frac{q^2}{g}}$

$\sqrt[3]{\frac{q^2}{g}} = 1.04$ m. $h_2 = +0.26 + 0.80 = 1.06$ m $\longrightarrow$ o.k.

---

at $t = t_4$: Assume flow condition (5) for the flow through the sluice:

$$Q_{sl} = 4.95 \times 1.35 \times (H_x)^{1.5}$$

H_x should be taken to the invert level.

$H_o = +0.01$

1st estimate: $H_i = +1.07$

from Figure A.V-3.3 follows direct that

$Q_i = 15{,}7\ m^3/s = Q_{s1}$

$H_x = +0.97$ m.

check H_i with storage decrease during period $\Delta t = t_4 - t_3$:

$$\Delta S = \Delta t \times (\bar{Q} - 8.68) = 1800 \times \left(\frac{16{,}39+15{,}7}{2} - 8.68\right) = 13.260 m^3$$

Storage area A at $H_i = +1.07$ is 537.000 m^2

Storage area A_o at $H_i = +1.15$ is 586.200 m^2

Average storage area $\bar{A}$ is 561.600 m^2

Total storage decrease is :

$$\Delta H_i = \frac{\sum \Delta S}{\bar{A}} = \frac{43.500}{561.600} = 0.08\ m \rightarrow H_i = \text{o.k.}$$

check flow condition:

$$\sqrt[3]{\frac{q^2}{g}} = 1.01\ m\ , \quad h_2 = +0.01+0.80 = 0.81\ m. \quad \text{o.k.}$$

(5) prevails.

Table A.V - 3.1 Floodrouting through a drainage sluice

discharges for flowcondition: (1) $Q_{sl} = 0.82 \times b \times d \times \sqrt{2g\ \Delta H}$ for full flow barrel b x d = 1.80 x 4.95

$= 32.3 \times \sqrt{\Delta H}$

(4) $Q_{sl} = 0.82 \times b \times h_2 \times \sqrt{2g(h_1-h_2)}$ for both outlet and inlet un-submerged.

$= 17,97 \times h_2 \sqrt{h_1-h_2}$ h_1 = upstream head; h_2 = downstream head.

(5) $Q_{sl} = 1.353 \times b \times (h_1)^{1.5}$ h_1 = upstream head

$= 6,7 \times (h_1)^{1.5}$

t	H_i	H_x	H_o	Q_i	Q_{sl}	Δt	$\bar{Q} \times \Delta t$	($\bar{Q}$-inflow)	ΔS	A_i	$\bar{A}$	$\sum \Delta S$	ΔH_i	H_i
t_o	+1.15	+1.15	+1.15	0	0	0		0		586.200				
t_1*	flow condition (1)													
	+1.15	+1.10	+1.00	16,0	10,1									
	+1.15	+1.14	+1.00	14,2	12.1									
	+1.15	+1.15	+1.00	<13	12.5	900	5,625	-2.43	- 2,190	586.200	586.200	- 2,190	0	+1.15
t_1	flowcondition (4)													
	+1.15	+1.05	+0.84	17,1	13.5									
	+1.15	+1.10	+0.84	16,0	15,0									
	+1.15	+1.12	+0.84	15,3	15,6	900	12,645	+5,32	+ 4,790	586.200	586.200	+ 2,600	0	+1.15
t_2	+1.11	+1.00	+0.53	16,6	16,4									
	+1.11	+1.01	+0.53	16,5	16,5	1800		+7,37	13,270	561.300	573.750	15,870	0,028	not ok
	+1.12	+1.00	+0.53	17,0	16,4									
	+1.12	+1.02	+0.53	16,6	16,7	1800	29.070	+7,47	13,450	567.500	576.850	16,050	0,03	+1.15
t_3	+1.10	+1.00	+0.26	16,3	16,4	1800	28,800	7,87	14,170	555.500	570.850	30,220	0,05	+1.15
						check flow condition: $h_2 \geq \sqrt[3]{\frac{q^2}{g}} = 1,04$				h_2 = +0,26+0.80 = +1.06			o.k.	
t_4	flowcondition (5)													
	+1.07	+0.97	+0.01		15.7	1800	28.890	7.37	13,270	537.000	561.600	43,490	0.08	+1.15
						check flowcondition : $h_2 \geq \sqrt[3]{\frac{q^2}{g}} = 1.01$				h_2 = +0.01+0.80 = 0.81			o.k.	
t_5	+1.05	+0.94	-		15.4	1800	27,990	6,87	12,370	524.500	555.350	58,860	0.10	+1.15
t_6	+1.02	+0.91	-		15,0	1800		6,52	11,740	509.500	547.850	67,600	0.12	
	+1.03	+0.92	-		15.1	1800	27,450	6,57	11,830	512.300	549.250	67,690	0.12	+1.15
t_7	+1.00	+0.89	-		14.6	1800	26,730	6,17	11,100	494.000	540.000	78,800	0.15	+1.15
t_8	+0.98	+0.87	-		14.4	1800	26,100	5,82	10,480	481.500	533.850	89,280	0.17	+1.15
t_9	+0.96	+0.84	-		14.1	1800	25,650	5,57	10,030	469.500	527.850	99,370	0.19	+1.15
t_{10}	+0.94	+0.81	-		13.7	1800	25,020	5,22	9,400	457.500	521.850	108,770	0.21	+1.15
t_{11}	+0.92	+0.79	-		13.4	1800	24,390	4,87	8,770	444.800	515.500	117,540	0.23	+1.15
t_{12}	+0.90	+0.76	-		13.0	1800		4,52	8,140	432.500	509.500	125,680	0.25	+1.15
			+0.13			check flowcondition: $h_2 \geq \sqrt[3]{\frac{q^2}{g}} = 0.89$				h_2 = +0.13+0.80 = +0.93 → (4) !				
	flowcondition (4)													
	+0.90	+0.76	+0.13	13,0	13,3									
	+0.90	+0.75	+0.13	13,2	13,2	1800	23,940	4,62	8,320	432.500	509.500	125,860	0.25	o.k.
t_{13}	+0.88	+0.74	+0.37	12,7	12,8	1800	23,400	4,32	7,780	420.000	503.640	133,640	0.27	+1.15
t_{14}	+0.87	+0.82	+0.68	10,3	10,0	1800	20,520	2,72	4,900	414.000	500.100	138,540	0.28	+1.15
t_{15}	+0.87	+0.87	+0.87	0	0	1080	5,400							
							361,620 m³.							

ANNEX V - 4 ENERGY LOSSES

1. Flow through pipes and barrels

The formula and coefficient for determining the discharge through a hydraulic structure can be derived from the basic orifice and weir formula

$Q = CA.\sqrt{2g.\ \Delta H}$, in which : Q = discharge in m^3/s

A = cross sectional area in m^2

g = gravity accelaration = 9.8 m/s^2

ΔH = energy head loss in m

C = coefficient

The total headloss is composed of three component

$\Delta H = dh_1 + dh_2 + dh_3$

dh_1 = friction loss, to be calculated with the Manning equation

$$dh_1 = \frac{L\ n^2\ v^2}{R^{4/3}} = \frac{2\ L\ n^2 g}{R^{4/3}} . \frac{v^2}{2g}$$

in which L = length of the culvert

n = roughness coefficient

R = hydraulic radius in m = cross sectional area A divided by wetted perimeter 0; for pipes R = D/4 in which D is internal diameter.

v = velocity in m/s

dh_2 = entrance convergence loss

$$dh_2 = K_e . \frac{v^2}{2g}$$

K_e = entrance loss coefficient; for square cornered entrances $K_e = 0.5$

dh_3 = exist divergence loss of velocity head

$$dh_3 = K_v . \frac{v^2}{2g}$$

K_v = exit velocity head coefficient;
for square cornered outlets $K_v = 1.0$

for structures with square cornered entrance and outlets.

$$\Delta H = \frac{v^2}{2g} \left(0.5 + 1.0 + \frac{2\ L\ n^2 . g}{R^{4/3}}\right)$$

or

$$\Delta H = \frac{v^2}{2g} \cdot C.$$

$$v = \sqrt{\frac{2g.\ \Delta H}{C}}$$

$$Q = A.v. = A. \sqrt{\frac{2g.\ \Delta H}{C}}$$

$$Q = C_1\ A. \sqrt{2g.\ \Delta H} \quad \text{in which } C_1 = \sqrt{\frac{1}{C}}$$

2. Energy losses due to sudden transitions in flow-profile

For sub-critical flow passing through sudden transitions, experiments on various designs were made by Formica (ref. 2) as shown in Figure A·V-4.1. In closed conduits, the energy losses in a sudden contraction may be expressed as :

$$\Delta H_{con} = k_{con} \times \frac{v^2}{2g},$$

for sudden expansion, the energy loss can be assumed as:

$$\Delta H_{exp} = k_{exp} \times \frac{(\Delta v)^2}{2g}$$

in which K = coefficient
v = velocity downstream of contraction or expansion
Δv = difference in velocity upstream and downstream of sudden expansion
g = gravity acceleration.

Applying these equations to open channels Formica obtained the following values for k_{exp}:

type of design (see Figure A V-3.1)	1	2	3	4	5	6	7	8
k_{exp}	0.82	0.87	0.68	0.41	0.27	0.29	0.45	0.49

According to experimental data obtained by Formica, the values of k_{con} for sudden contractions seem to vary in wide range, generally increasing with the discharge. The approximate medium value of k_{con} for design (1) is 0.10 and for designs (2) to (4) is 0.06.

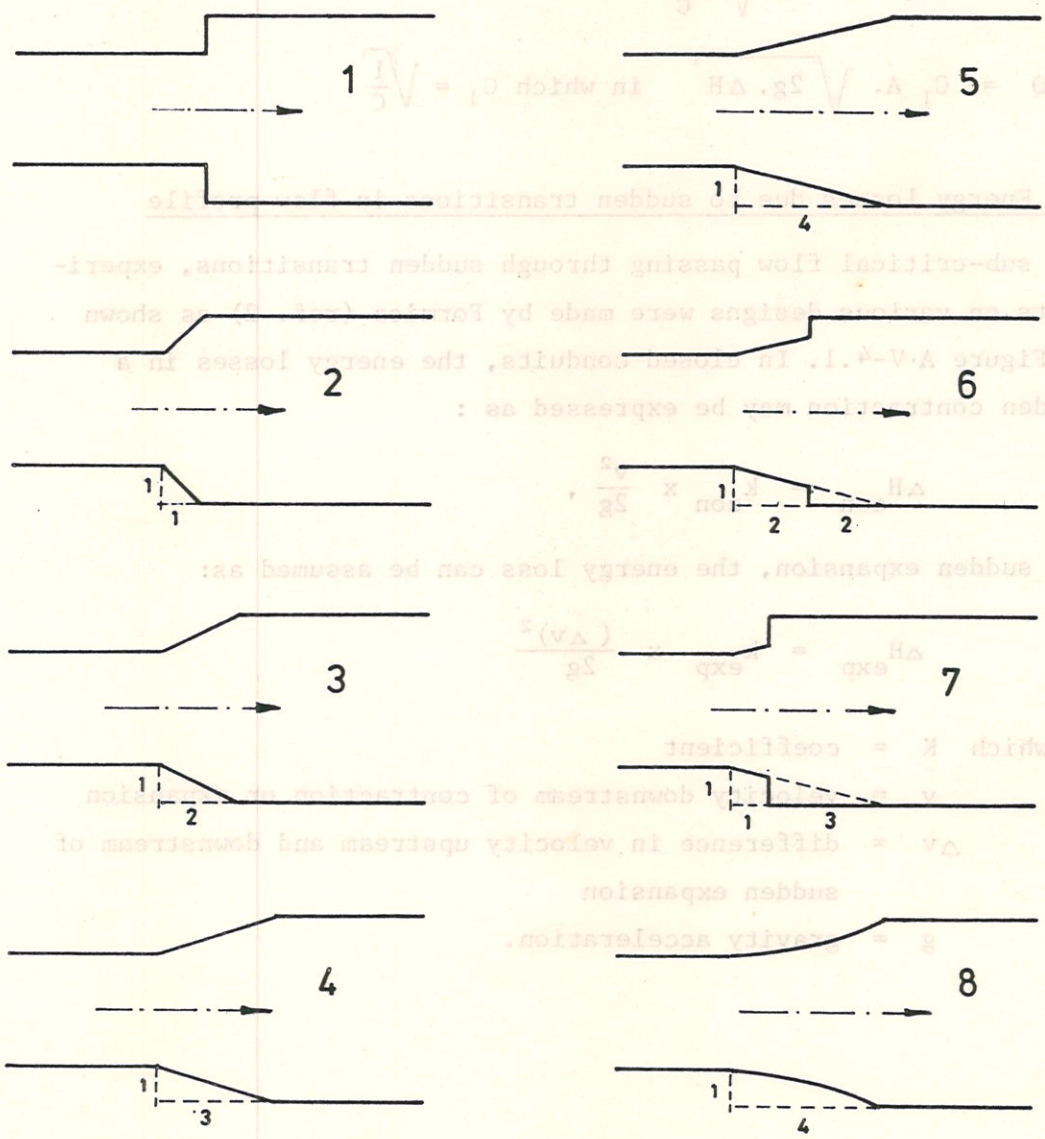

Figure A.V - 4.1 Various designs for sudden transitions for the experiments of Formica (ref. 2).

REFERENCES

1. ILRI (International Institute for Land Reclamation and Improvement), Publication 16, Drainage Principles and Applications, Wageningen, the Netherlands, 1973.

2. Ven Te Chow, Open Channel Hydraulic.

3. BWDB, Hydrologic and Hydraulic Design Procedure's for Drainage Structures.

4. BWDB, Water Supply Paper 416, Morton & Khan, 1979.

5. IECO, BWDB, Southwest Regional Plan, 1980.

6. FAO, Irrigation in Monsoon Asia, P. Kung, Plant Production and Protection Divisions, Rome, 1971.

7. United States Department of the Interior, Bureau of Land Reclamation - "Design of Small Dams"-.

REFERENCES

1. ILRI (International Institute for Land Reclamation and Improvement), Publication 16, Drainage Principles and Applications, Wageningen, the Netherlands, 1973.

2. Ven Te Chow, Open Channel Hydraulic.

3. BWDB, Hydrologic and Hydraulic Design Procedure's for Drainage Structures.

4. BWDB, Water Supply Paper 416, Morton & Khan, 1979.

5. IECO, BWDB, Southwest Regional Plan, 1980.

6. FAO, Irrigation in Monsoon Asia, P. Kung, Plant Production and Protection Divisions, Rome, 1971.

7. United States Department of the Interior, Bureau of Land Reclamation - "Design of Small Dams".

DESIGN MANUAL

FOR POLDERS IN SOUTH-WEST BANGLADESH

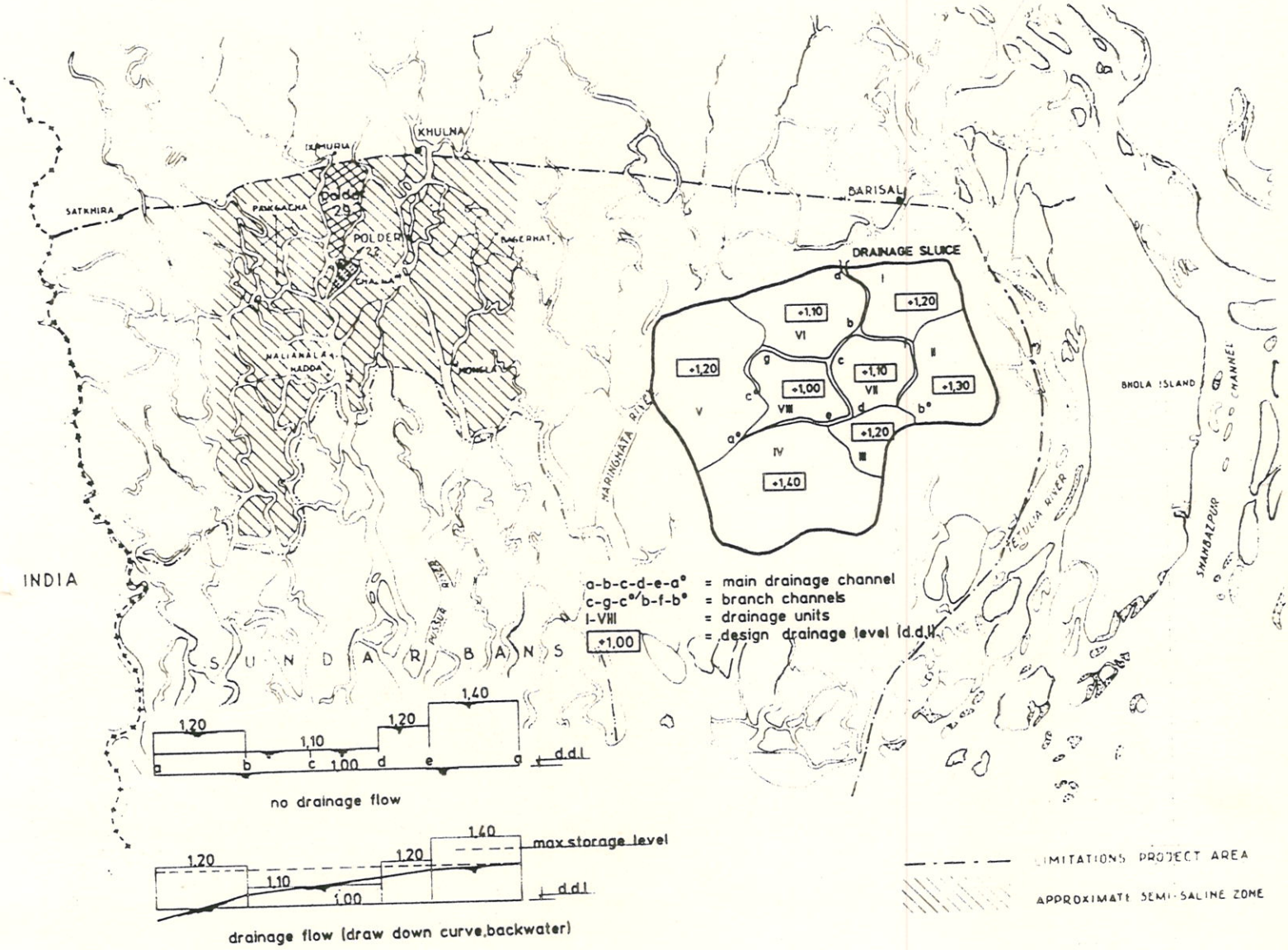

VOL. VI

DELTA DEVELOPMENT PROJECT
BANGLADESH-NETHERLANDS JOINT PROGRAMME
UNDER BWDB

DHAKA
NOVEMBER 1985

UNDER EMDP
BANGLADESH-NETHERLANDS JOINT PROGRAMME
DELTA DEVELOPMENT PROJECT

DHAKA

NOVEMBER 1985

VOL. IV

DESIGN MANUAL

FOR POLDERS IN SOUTH-WEST BANGLADESH

VOLUME VI. FOUNDATION DESIGN

Table of Contents

	Page
Chapter 1. Introduction	VI-1
1.1 General	VI-1
1.2 Bearing capacity, shearing resistance	VI-2
1.3 Stress distribution in the soil beneath a load	VI-3
1.4 Equilibrium in soil	VI-7
1.5 Active, Passive, Neutral earth pressure	VI-8
1.6 Types of foundation	VI-11
1.7 Criteria and Definitions	VI-12
Chapter 2. Lateral Earthpressure	VI-15
2.1 Rankine and Coulomb Methods	VI-15
2.2 Equivalent Fluid Pressure Method	VI-20
2.3 Comparison of the Coulomb, Rankine and Equivalent Fluid Pressure Methods for calculating lateral earthpressures	VI-24
2.4 Stability	VI-24
2.4.1 General	VI-24
2.4.2 Stability against overturning	VI-28
2.4.3 Stability against sliding	VI-29
Chapter 3. Earthpressure on top of structure	VI-32
3.1 Earthpressure on top of barrel section of sluices	VI-32
3.2 Earthpressure on top of burried pipes	VI-32
Chapter 4. Design of shallow foundations	VI-38
4.1 General	VI-38
4.2 Bearing capacity of soil	VI-38
4.3 Settlements	VI-44
4.3.1 General	VI-44
4.3.2 Uniform immediate settlements	VI-45
4.3.3 Differential settlements	VI-47
4.3.4 Consolidated settlements	VI-48

Page

Chapter 5. Design of Deep Foundation VI-51

5.1 Introduction VI-51

5.2 Bearing capacity of piles VI-52

5.2.1 General VI-52

5.2.2 Pile capacity in cohesive soils VI-54

5.3.3 Pile capacity in cohesion-less soils VI-56

5.3.4 Capacity of pile groups VI-58

5.3 Design of pile foundations VI-59

5.3.1 General VI-59

5.3.2 Control computation by means of the elastic centre of a pile system VI-61

5.4 Pile systems VI-63

Chapter 6. Seepage VI-66

6.1 General VI-66

6.2 Seepage flow and uplift pressure under a water retaining structure VI-67

6.3 Seepage through a dam or embankment VI-70

6.4 Drainage of excavations VI-73

6.4.1 Open drainage VI-73

6.4.2 Filter well drainage VI-74

6.4.3 Operation and application of filter well drainage VI-75

ANNEX VI-1 COMPARISON BETWEEN RANKINE, COULOMB AND EQUIVALENT FLUID PRESSURE METHODS VI-78

ANNEX VI-2 BEARING CAPACITY CALCULATION VI-81

ANNEX VI-3 COMPUTATION OF PILE FOUNDATION VI-83

VOLUME VI. FOUNDATION DESIGN

Chapter 1. Introduction.

1.1 General.

The basic problems for the designer to solve with respect to foundations and soil mechanics are to design the structure itself strong enough so that :

- all external forces, excerted by water and earth can be resisted,
- the total forces excerted on the subsoil through the foundation are within permissible limits.

The problem therefore can be divided into three major subjects i.e. the soil pressure against and on top of the construction and the foundation design itself.

Furthermore, there is the problem of seepage under the construction and along the sides of it, which has to be blocked by means of cutoff walls. A related problem is the dewatering of excavations to be made for the construction works.

In the following Chapters these subjects will be further elaborated.

For the design works as mentioned above, information has to be available or gathered on the properties, characteristics and strength of the soil. In Volume II, Chapter 6, it is described in which way the soil investigations for a certain construction have to be arranged and what kind of tests are available to asses the soil properties.

Normally the design engineer is not physically involved with the soil investigations and soil testing programme but he will have to base his design on the information presented in the soil report. In the best case he has been involved with arranging and directing the soil investigations. However, the designer should know which tests are required to establish the soil properties needed and which soil properties are to be known for the specific structure he is going to design.

The soil properties which have to be known for the design of foundations for hydraulic structures are :

Table VI - 1.1

		F	W	S
1.	Soil type and description	X	X	X
2.	Unit weight	X	X	-
3.	Relative density of cohesion less soils	X	X	X
4.	Consistency of cohesive soils	X	X	X
5.	Compressibility*)	X	-	-
6.	Shearing resistance	X	X	-
7.	Cohesion	X	X	-
8.	Permeability	-	-	X

F = for foundation design
W = for retaining wall design or horizontal earthpressures
S = design of cutoff walls to prevent seepage
*) = only in case bad subsoil is present, consisting of peat or peat layers.

The laboratory tests to be performed to establish these properties are elaborated in Volume II, Chapter 6.

Before recommendations are made for a certain soil investigating programme, the approximate dimensions and costs of the structure are to be evaluated against the costs of a soil investigation programme.

1.2 Bearing capacity, shearing resistance.

The most important feature for the design engineer to know is the bearing capacity of the soil, being the average contact pressure on the soil at a stage that compression and settlement of the soil is still permissible for the structure, and no failure will occur due to exceedance of the shear strength of the soil.

In case of highly compressive soils, like peat, where settlements will become too big for the construction to bear, it is necessary to test the compressibility of the soil and determine which settlements are resulting from which loads. It may appear that the bearing capacity of the soil is the critical value for the foundation design.

If firm subsoil is available with no peat layers upto a depth of 15 m, then mostly the shear resistance will be the determinant factor. Settlements will in this case be limited. Failure might occur due to subsidence of the subsoil, because the increase of load causes exceedance of shear resistance. This subsidence is assumed to take place along the sides of a triangular shaped soil body under the foundation and along two curved slide planes as indicated in Figure VI - 1.1.

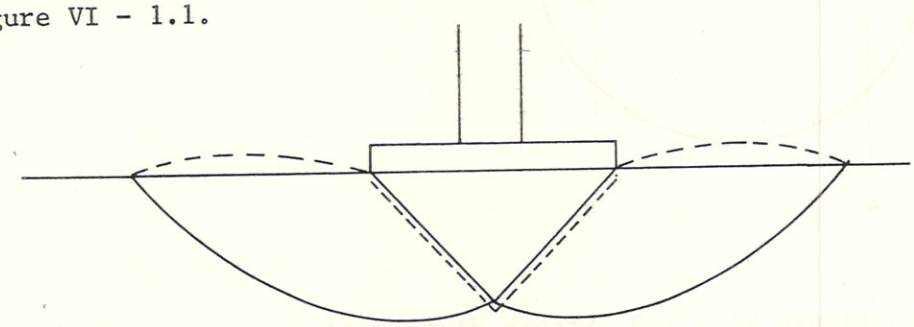

Figure VI - 1.1 Failure of soil under a footing.

It follows that the resistance against failure due to shear will increase as the foundation depth increases. Shearing will in this case be resisted by the load of the earth next to the foundation. Most formulas to calculate the soils bearing capacity are based on this phenomena.

1.3 Stress distribution in the soil beneath a load.

The stress in the soil may be defined as the total force acting on a certain area, devided by the area.

If an infinite plane area is loaded with a unit contact pressure p, the increase of the vertical stress is constant through the whole depth beneath the load and equal to p.

If the loaded area has limited dimensions the problem becomes more complicated. The pressure excerted by the load will be distributed because of the shearing stresses in the planes AA and BB of Figure VI - 1.2 which impede the settlements of the soil mass between these planes. With increasing depth the stresses in a horizontal plane will increase less.

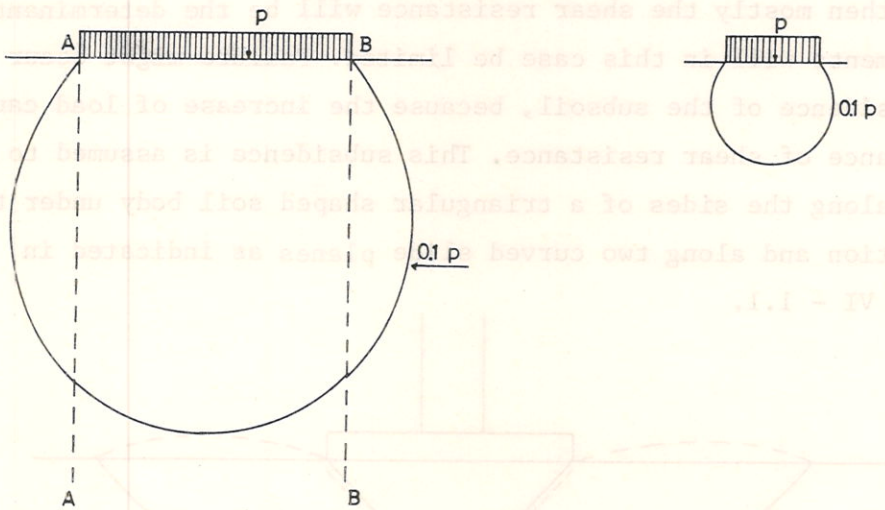

Figure VI - 1.2 Stress distribution.

It follows that the settlement of a loaded foundation is dependent on :

1. the maginitude of the load
2. the compressibility of the soil
3. but also of the size of the loaded area; the greater this area, the greater the depth over which a certain stress increase will extend below the ground surface (see Figure VI - 1.2).

This can also be made clear with a loaded slab of an area A and a certain settlement z. The stresses will be distributed sideways and the area immediately surrounding the slab will thus also get a settlement, though this will be smaller. If a second loaded slab is placed beside the first, the first slab will get a further settlement. So if we place nine equally loaded slabs in a square, the middle one will get the greatest settlement

because it will be influenced by the eight surrounding slabs. An oil tank with a flexible bottom founded on a compressible soil will have a greater settlement beneath the centre, while the pressure is distributed uniformly over the bottom area. The bottom will assume a more or less spherical shape (Figure VI - 1.3).

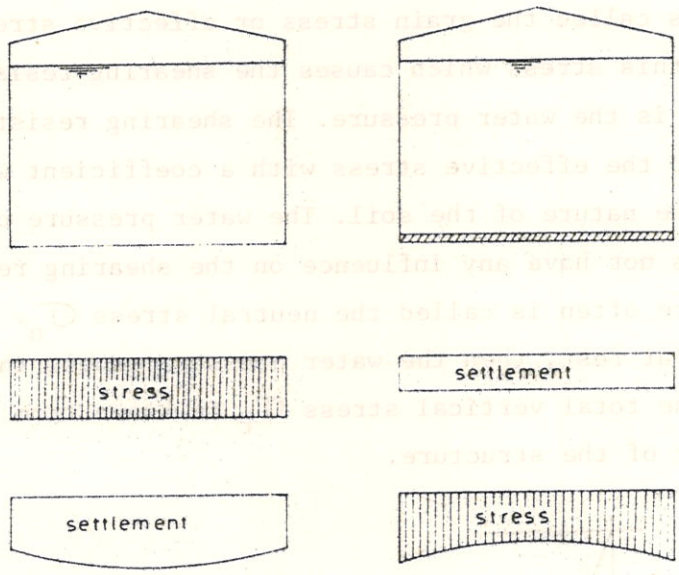

Figure VI - 1.3 Settlement and stress under rigid and flexible foundation plates.

On the other hand, if the bottom slab is perfectly rigid, the settlement is uniform, so the stresses are not uniformly distributed.

For practical purposes it is however assumed that the contact pressure between foundation and soil is uniformly distributed.

At the depth of about two times the smallest dimension of the foundation the stresses are distributed enough to say that the settlement due to the compression of the soil beneath this depth may be neglected. Therefore core borings often are carried out to a depth of about two times the width of the future foundation. It must, however, be born in mind that if there is more than one footing, these footings may influence each other if their intermediate distance is small, so the core borings have to be carried out to a lower level.

The total weight of a structure is transferred to the underlying soil via forces acting at the contact points of the grains and the water pressure. The total vertical stress equals the sum of these components :

$$\sigma_t = \sigma_w + \sigma_e$$

in which σ_e is called the grain stress or effective stress, because it is this stress which causes the shearing resistance of a soil; σ_w is the water pressure. The shearing resistance is proportional to the effective stress with a coefficient which is dependent on the nature of the soil. The water pressure on the other hand does not have any influence on the shearing resistance, and it therefore often is called the neutral stress σ_n. If the groundwater is at rest, then the water pressure equals the piezometric head. The total vertical stress σ_t is known from the total load and weight of the structure.

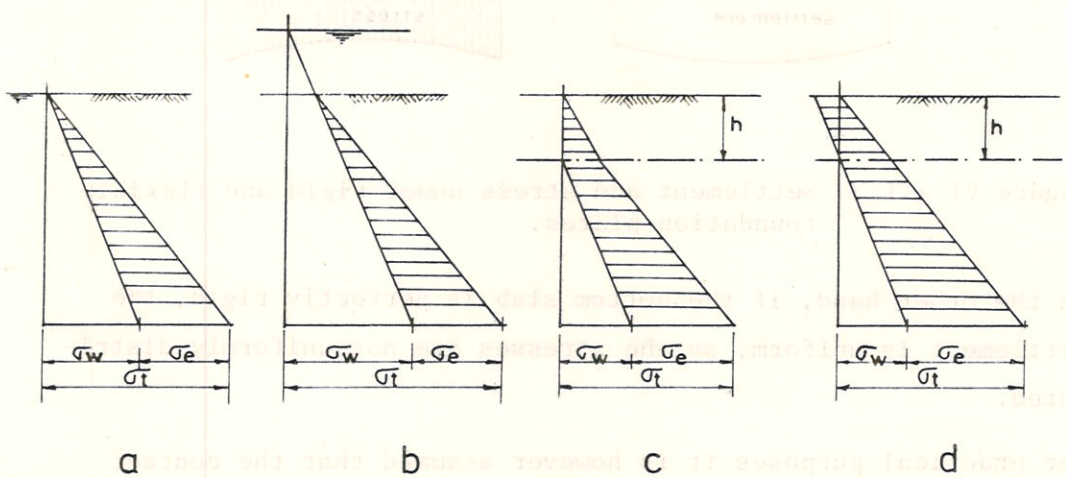

Figure VI - 1.4

In Figure VI - 1.4 the distribution of the total stress, the effective stress and the water pressure are shown, if the phreatic level coincides with the ground surface (a) and if the water level is above the ground surface (b). The effective stresses are the same in case (a) and (b). Case (c) and (d) give the situation if the phreatic level sinks a distance h below the

ground surface. If the soil has no capillary action the diagram becomes according to (c),

σ_t decreases with h. $(\gamma_s - \gamma_d)$	γ_d = unit dry weight of soil (natural unit weight)
σ_w decreases with h. γ_w	γ_s = saturated unit weight of soil.
σ_e increases with h. $(\gamma_w - \gamma_s + \gamma_d)$	γ_w = unit weight of water

If the soil over the height h is filled with capillary water, the total vertical stress does not alter, so the effective stress increases with the same amount as the water pressure decreases (see (d)).

A lowering of the water table causes an increase of the effective stresses and, for compressible soils, settlements. This is a problem in polders where the requirements of agriculture lead to a lowering of the water table, which causes settlements at locations with peat layers and means that a further lowering of the water table will be necessary, a.s.o.

1.4 Equilibrium in soil.

If we consider the equilibrium of the soil part ABCD of Figure VI - 1.5, which forms part of an infinite slope, then the forces P, W, and R, that form an equilibrium with the weight G, are all acting under an angle α with the normal of the plane on which they act. They all excert shearing forces on those planes.

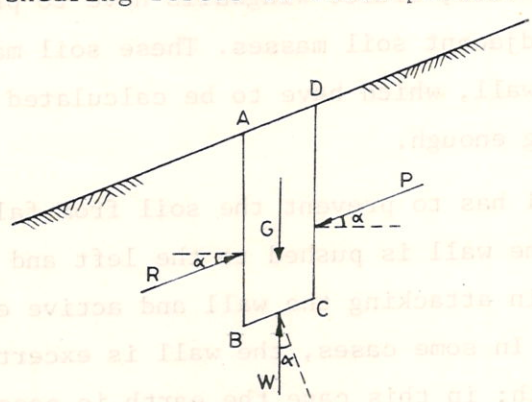

Figure VI - 1.5 Forces on a slope particle.

If the shearing force exceeds a critical value then the soil will subside. For non cohesive soils the critical value of the shearing stress is dependent on the magnitude of the effective stress on that plane. The most direct and simple method to determine the relation between critical shear stress and effective stress is the direct shear test (see Volume II, Chapter 6.3.4). The result may be plotted graphically with the shear stress on the vertical axis and the effective stress on the horizontal axis. The results show a straight line :

$$\tau_{max} = \sigma_e . \tan\varphi + c$$

c = cohesion

φ = angle of internal friction,
for sand : $25^o < \varphi < 40^o$; average $\varphi = 30^o$

For a cohesive soil sample (clay) the result will show an almost horizontal line, or, the shearing stress seems independent of the effective stress and is apparently zero. The reason is that if the load is applied quickly, it is taken by the waterpressure and the effective stress will not immediately increase. Because σ_e does not increase, τ does not either. However, if the test is done at a slow rate, giving over-pressed pore water the time to flow away, the result will yield also for clay an angle of internal friction.

1.5 Active, Passive, Neutral earth pressure.

Retaining walls, abutments, sluice wingwalls have to provide lateral support for the adjacent soil masses. These soil masses will excert forces on the wall, which have to be calculated in order to design the wall strong enough.

In most cases the wall has to prevent the soil from falling in. In Figure VI - 1.6, the wall is pushed to the left and the earth is actively involved in attacking the wall and active earth-pressure is excerted. In some cases, the wall is excerting a force against the earth; in this case the earth is passively involved in resisting the force, the earth is excerting a passive earth pressure.

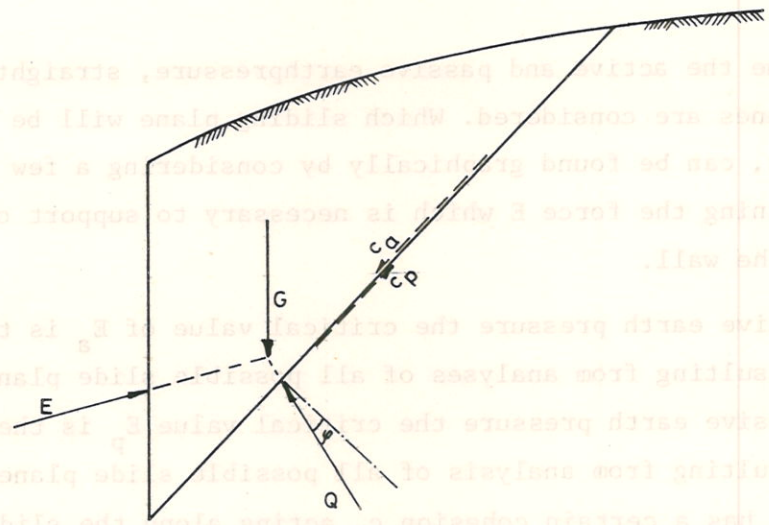

Figure VI - 1.6

To calculate the earth pressure, active, or passive, a theory is adopted assuming straight sliding planes.

The use of earth pressure theory to estimate soil pressure against a construction is valid only if the following three conditions are satisfied:

1. The construction, or part of it, can yield sufficiently by tilting or sliding, so that the full shearing resistance of the backfill can develop.
2. The pore water pressure in the backfill is negligible.
3. The soil properties appearing in the earth pressure equations have values that can definitely be determined.

The amount of deflection necessary for full shearing resistance to develop is in the order of 0.1% of the wall height, and can almost always be expected to develop except where the wall movement is physicially restrained, for instance, earth pressure against the barrel of a sluice. In such cases special care has to be taken. Pore water pressure will usually be negligible if a properly designed drainage system is constructed behind the wall. The third condition is often not so easily satisfied. Frequently constructions must be designed when the only information about a soil to be used for backfill is its general type. In such cases soil properties should be assumed which, from experience, have been found satisfactory.

To determine the active and passive earthpressure, straight sliding planes are considered. Which sliding plane will be determinant, can be found graphically by considering a few cases and determining the force E which is necessary to support or to push back the wall.

For the active earth pressure the critical value of E_a is the minimum, resulting from analyses of all possible slide planes. For the passive earth pressure the critical value E_p is the maximum resulting from analysis of all possible slide planes. If the soil has a certain cohesion c, acting along the sliding plane, then this has to be taken into account.

If the wall is vertical, the groundsurface horizontal and the direction of E horizontal, then the active and passive earthpressure can be calculated analytically as :

$$E_a = \tfrac{1}{2} \gamma h^2 . \tan^2 (45^o - \varphi/2) - 2. h.c. \tan (45^o - \varphi/2)$$

$$E_p = \tfrac{1}{2} \gamma h^2 . \tan^2 (45 + \varphi/2) + 2. h.c. \tan (45^o + \varphi/2)$$

In which γ = unit weight of the soil

c = cohesion

φ = angle of internal friction

For non cohesive soils (c = 0) the formulas are simplified to :

$$E_a = k_a . \tfrac{1}{2} . \gamma h^2$$

$$E_p = k_p . \tfrac{1}{2} . \gamma h^2$$

In which k_a and k_p are coefficients depending on φ. The most common used methods to determine the values of these coefficients are based on the theories of Coulomb and Rankine. Which of these theories is to be applied will be discussed in Chapter 2.

The value of the earthpressure may vary between E_a and E_p. Sometimes it is important to know the magnitude of the earth pressure in case a wall can not or is not allowed to displace. E.g. abutments of moveable bridges have to be rigid, coupled walls of a sluice barrel can not displace. The earth pressure which has to be resisted

in these cases is called the neutral earth pressure. The coefficient for neutral earth pressure k_n has the same meaning as k_a and k_p. Roughly it may be admitted that, k_n for nearly all kind of soils lies between 0.5 and 0.6 (empirically established).

In the above it was assumed that failure will occur along straight sliding planes. If curved sliding planes would have been considered, the resulting earth pressure might have been more unfavourable. In other words: a failure along a curved sliding plane might take place at an earlier stage than along the most unfavourable straight plane. The result would be an E_a which is bigger than in case of straight sliding planes and E_p which is smaller. However, the differences for the active earthpressure are only small and E_a may be determined under the assumption of straight sliding planes. The values determined for E_p under assumption of straight sliding planes must be used with great care.

1.6 Types of foundation.

Foundations have the function to transfer the load of the structure which can be of high stress intensity to the supporting capacity of the soil, which can be rather low.

The transmission of stresses can take place via a shallow foundation, of which the depth of load transfer is less than the least dimension of the footing, or via a deep foundation, (pile or caisson) with depth of foundation exceeding the width.

Which type of foundation should be applied depends fully on the structural load and the characteristics of the foundation soil. The foundation should in any case provide an adequate means to support the structure without causing shear failure or untolerable settlements.

This support can be achieved by spreading the load over a bigger area, or by transferring the load via members to lower levels, making use of the friction and/or end bearing of the members. Spreading the load can be done by making use of spread footings or rafts, resulting generally in a shallow foundation.

For deep foundations, piles, caissons or sheet piling can be used. shallow foundations will be elaborated in Chapter 4, pile foundations will be highlighted in Chapter 5.

1.7 Criteria and Definitions.

Before the design of the foundation can start, the forces acting on the structure and through the structure on the underlying soil, should be analysed with respect to the stability of the structure. Then it should be investigated whether the soil underlying the foundation is capable of supporting the loads superimposed by the structure, considering the performance of the foundation with respect to :

- bearing capacity, or strength of the supporting soil, and
- allowable settlements

A bearing capacity failure is characterized by the structure breaking into the soil because the material is incapable of supporting the load. Settlement is characterized by the sinking of the structure due to compression and deformation of the underlying material. These two behaviours are independent and are investigated separately. Both, however, are caused by excessive foundation pressure.

At first the structures safety with respect to stability will be discussed.

Instability may be caused by overturning forces exceeding the counterbalancing forces or lateral forces exceeding the friction forces acting along the foundation bottom or exceeding the shear stress of the soil which has to resist sliding. In the foundation design, the safety factor against overturning is taken as :

$$S_{fo} = 1.5$$

The safety factor against sliding is :

S_{fs} = 2 in case passive earthpressure can develop.

S_{fs} = 1.5 in case of absence of passive earth pressure.

Safe soil pressures for bearing are based on the ultimate bearing capacity of the soil. To satisfy the requirements of safety, the safe soil pressure under maximum load is usually limited to ½ or 1/3 the ultimate bearing capacity. That is, the factor of safety against a bearing capacity failure under maximum load should be 2 for non cohesive soils and 3 for cohesive soils.

With respect to settlements that can be allowed for hydraulic structures the following should be considered. Settlements may be uniform or differential, depending upon the load distribution and the soil characteristics. A uniform settlement , with the foundation remaining plane, will not create significant problems as long as the amount of settlement is within tolerable limits. When the foundation pressures are not uniform, or the foundation soil varies in strength, differtial settlement will occur. Differential settlements are defined as the difference in settlements between two points of the foundation. It is generally accepted that the maximum differential settlement may not exceed 3/4 of the computed total maximum settlement. For hydraulic structures the maximum settlement that may occur is set at 5 cm. However it should be kept in mind that the size, type and importance of the structure, will be of influence.

For instance, if a drainage sluice is provided with a sliding gate, which is to be operated along two parallel slots which are 6 m high from bottom to top, and the gate has a play of 2.5 cm in horizontal direction, the maximum allowable tilt of the structure is $\frac{0.025}{6} = 4 \times 10^{-3}$. If the width of the foundation is also 6 m, then the differential settlement should not be more than 2.5 cm, which indicates a maximum total settlement of $\frac{4}{3} \times 2.5$ cm = 3,3 cm.

Greater settlements may cause problems with operating the sliding gate.

In the following chapter the under mentioned terms will be used.

- <u>Total foundation pressure</u> = total of all forces acting on the base of a foundation, comprising structures dead weight,

live loads, vertical components of lateral forces, earth fill on top, etc.

- Net foundation pressure = increase in loading of the underlying soil under a foundation, if compared with the original loading condition, i.e. net foundation pressure = total foundation pressure minus the weight of the soil that used to be on top.

- Q_{ult} (ultimate bearing capacity) = soil pressure at which failure of the soil will occur, if exceeded.

- q_{ult} (safe ultimate bearing capacity) = soil pressure which safely can be applied.

$$q_{ult} = \frac{Q_{ult}}{S}, \text{ in which } S = \text{safety-factor.}$$

- q_a (allowable bearing capacity) = allowable increase in net foundation pressure for an estimated maximum settlement of 2.5 cm.

To check whether a foundation pressure meets the criteria, the total foundation pressure should be compared with q_{ult} (safe ultimate bearing capacity) and/or q_a (allowable bearing capacity).

Chapter 2. Lateral Earthpressure

2.1 Rankine and Coulomb Methods.

To determine lateral earthpressure against a structure, straight sliding planes are considered, along which failure of the soil will occur. Equilibrium is then analysed either analytically or graphically, considering all driving and resisting forces acting on the structure and the plane of rupture.

Most methods commonly used to determine earth pressure can be grouped under either Rankine's or Coulomb's theory. Each theory is based on a separate set of conditions, which the foundation has to satisfy and only for the rare case when the conditions coincide can they be applied interchangeably.

The basic characteristics of the two theories are :

Coulomb	Rankine
- rupture surface is a plane surface	- do
- backfill surface is planar	- do
- friction forces are distributed uniformly along the plane ruptive surface, friction coefficient $f = \tan \varphi$	- do
- failure wedge is a rigid body	- do
- there is wall friction, the wedge moves along the back of the wall developing friction forces	- no wall friction
- resultant pressure E_a or E_p against the wall is found directly	- yields the resultant pressure against a vertical plane rising from the heel of the wall. To find the resultant pressure against the back of the wall, the weight of the soil between the vertical plane and the wall must be combined with Rankine's resultant pressure against the vertical plane.

coulomb

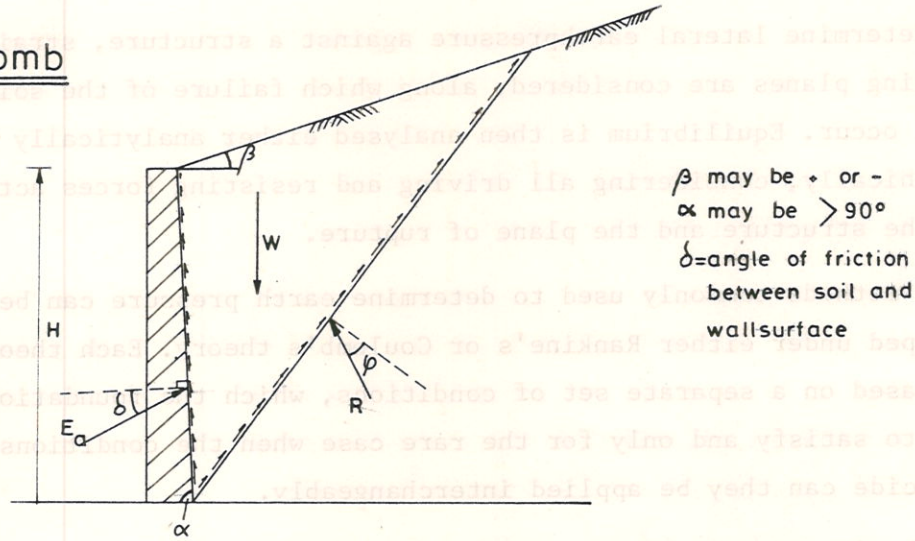

Figure VI - 2.1

rankine

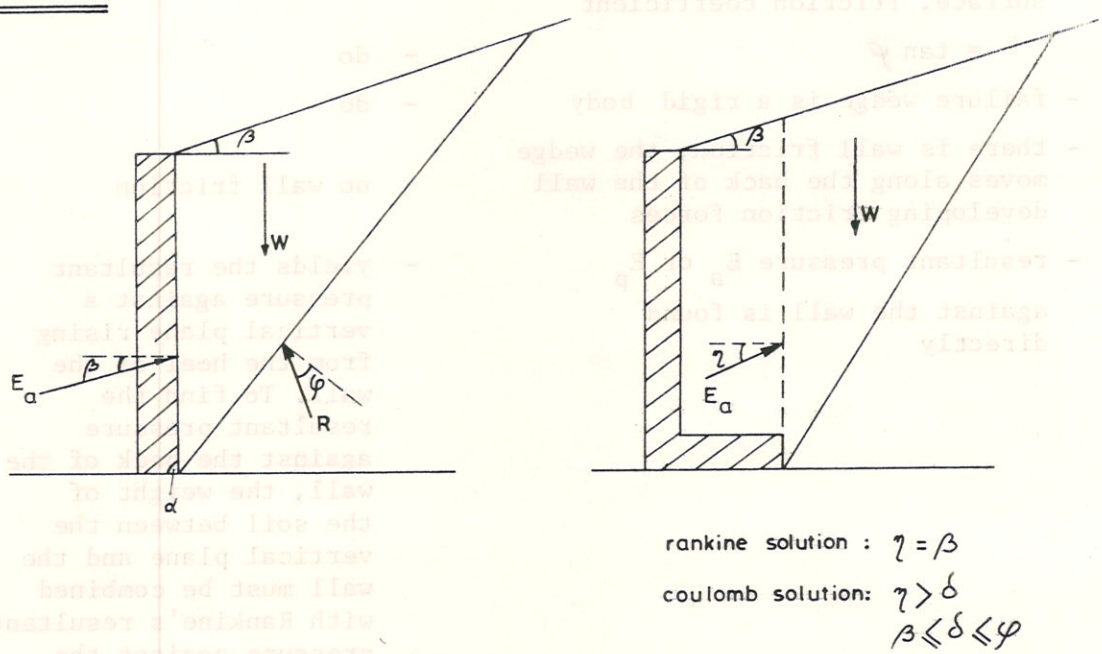

Figure VI - 2.2

Figure VI - 2.1 and VI - 2.2 illustrate the conditions that must exist before either theory may be applied to a particular situation. These conditions may be summarized as follows :

1. If the back of a wall is a plane surface, or a surface which can be assumed to be plane without introducing significant errors, either method may be applied depending upon which of the following conditions prevails :

   a) If the outer plane of rupture cannot form because of interference with the structure, Coulomb's conditions prevail.

   b) If the outer plane or rupture can form through the soil, Coulomb's conditions prevail if the obliquity of the pressure is equal to or greater than δ , and Rankine's conditions prevail if the obliquity is equal to or less than δ .

2. If the back of the wall cannot be assumed to be a plane surface, Coulomb's conditions cannot prevail, but Rankine's conditions will prevail if the outer plane of rupture can form without being obstructed by the wall.

In general, <u>solid gravity retaining walls</u> will satisfy Coulomb's conditions, especially if δ is assumed to be equal to or less than 2/3 φ .

<u>Cantilever and counterfort</u> walls do not satisfy the assumptions of either theory. However, these walls with the usual proportions can be assumed to satisfy Rankine's conditions without significant error.

The obliquity, φ , of the pressure resultant cannot be determined beforehand. The problem must be set up and solved, using either theory, and the obliquity determined. (It should be remembered that the obliquity considers only the pressure excerted by the soil on the wall and does not include the weight of the wall).The general equation for calculating the lateral earthpressure (see paragraph 1.5) is :

$E = k . \frac{1}{2} \gamma . h^2$ in which for active earthpressure the subs a and for passive earthpressure the subs b have to be added to E and k.

For Coulomb's theory:

$$k_a = \frac{\sin^2(\alpha + \varphi)}{\sin^2\alpha \, . \, \sin(\alpha - \delta) \cdot \left[1 + \sqrt{\frac{\sin(\varphi+\delta) . \sin(\varphi-\beta)}{\sin(\alpha-\delta) . \sin(\alpha+\beta)}} \right]^2}$$

$$k_p = \frac{\sin^2(\alpha - \varphi)}{\sin^2\alpha \, . \, \sin(\alpha + \delta) \cdot \left[1 - \sqrt{\frac{\sin(\varphi+\delta) . \sin(\varphi+\beta)}{\sin(\alpha+\delta) . \sin(\alpha+\beta)}} \right]^2}$$

For Rankine's theory:

$$k_a = \cos\beta \, . \, \frac{\cos\beta - \sqrt{\cos^2\beta - \cos^2\varphi}}{\cos\beta + \sqrt{\cos^2\beta - \cos^2\varphi}} = \cos\beta \cdot \varepsilon$$

$$k_p = \frac{\cos\beta}{\varepsilon}$$

In the following an example will illustrate a comparison of the two theories, (see Figure VI - 2.3)

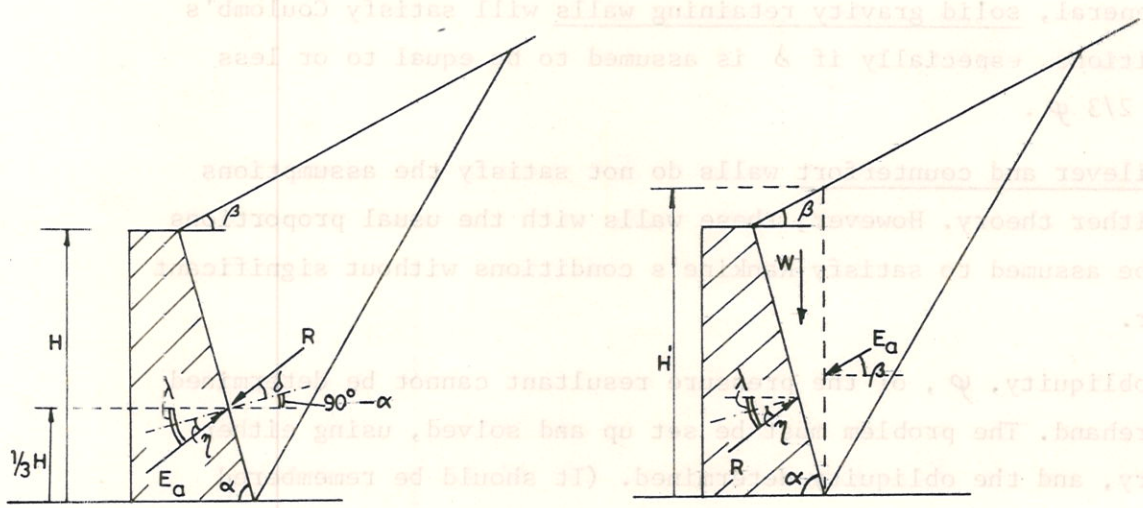

Figure VI - 2.3

assume :

$\beta = 18.4^{o}$ (1 into 3) $\qquad \gamma = 19\ KN/m^3$

$\alpha = 65^{o} \qquad H = 5\ m$

$\varphi = 30^{o} \qquad E_a = \frac{1}{2}.\gamma.h^2.k_a$

$\delta = 20^{o}$

According to Coulomb's theory, the active earthpressure is :

$$E_a = k_a.\ \tfrac{1}{2}.\gamma h^2 = 0.793 \times \tfrac{1}{2} \times 19 \times (5)^2 = 188\ KN/m^1$$

The angle which the resultant E makes with the horizon is determined : $\lambda = \delta + (90^{o} - \alpha) = 45^{o}$

and the angle η is determined by: $\eta = \lambda + \alpha - 90^{o} = 20^{o}$

To satisfy the Coulomb theory conditions, $\eta \geqslant \delta$, and since $\eta = \delta = 20°$, the conditions are met.

According to Rankine's theory, the active earthpressure is :

$$E_a = k_a.\ \tfrac{1}{2}\gamma.\ h^2 = 0.398 \times \tfrac{1}{2} \times 19 \times (5.45)^2 = 122\ KN/m^1$$

horizontal component : $Ea_h = E_a \times \cos\beta = 107\ KN/m^1$

vertical component : $Ea_v = E_a \times \sin\beta = 35\ KN/m^1$

The weight of the soil wedge is : $W = 19 \times [\frac{(1.34 \times 5)}{2} + \frac{(1.34 \times 0.45)}{2}]$

$$W = 69\ KN/m^1$$

On the surface of the wall are acting:

horizontal : $R_h = Ea_h = 107\ KN/m^1$

vertical : $R_v = Ea_v + W = 104\ KN/m^1$

$R = 149\ KN/m^1$

and the angle with the horizontal is then :

$$\tan\lambda = \frac{Rv}{Rh} = \frac{104}{107} \longrightarrow \lambda = 44.2^{o}$$

$$\eta = 44.2 - 25^{o} = 19.2^{o}$$

This angle η is less than the friction angle $\delta = 20^{o}$ between the soil and surface of the structure, hence Rankine cannot be applied

in this case.

In actual practice it will usually not be necessary to make preliminary computations of the angle of obliquity to determine which theory will prevail. Under most circumstances Coulomb's theory will almost always prevail for solid gravity walls, and Rankine's theory can be used for cantilever and counterfort walls. The Rankine solution is often used because the equations are simple, especially for cohesionless soils and horizontal backfill and because uncertainty of evaluating the wall friction δ. The Rankine solution gives slightly larges values of E_a.

2.2 Equivalent Fluid Pressure Method

A third method has been developed by Peck and Terzaghi, based on Rankine's theory, that is usually applied to retaining walls with a horizontal backfill. Rankine's formula for $\beta = 0$ is:

$$k_a = \frac{1 - \sin \varphi}{1 + \sin \varphi} \quad \text{and} \quad E_a = \tfrac{1}{2} \gamma \cdot k_a . H^2$$

The equivalent fluid method substitutes K for $\gamma . k_a$, where K is called the unit weight of an equivalent fluid that produces the horizontal force E_a. Values for K have been determined semi-empirically in which allowances for cohesion are made and may be applied to walls less than 6 m high.

The method consists of assigning the available backfill material to one of five categories or types of material. Depending on the type of wall and the physical conditions likely to be encountered, horizontal and vertical coefficients K_h and K_v are selected from an appropriate pressure chart. Inserting the coefficients in the general formula : $P = \frac{1}{2} KH^2$, the horizontal and vertical pressure components can be computed.

Figures VI - 2.4 to VI-2.5 indicate the different factors K for various cases.

The method is applicable to gravity, counterfort and cantilever walls. As with Ranine's method the computed pressures act on a vertical plane rising from the wall heel. To find the resultant

pressure on the wall the weight of the soil wedge between the wall and the plane must be added to the computed pressure. The five categories, or types of backfill to be used with this method are :

1. Coarse-grained soil without admixture of fine soil particles; very permeable. (clean sand or gravel).
2. Coarse-grained soil of low permeability due to admixture of particles of silt size.
3. Residual soil with stones; fine silty sand; granular materials with conspicuous clay content.
4. Very soft or soft clay; organic silts; silty clays.
5. Medium or stiff clay deposited in chunk and protected in such a way that a negligible amount of water enters the spaces between the chunks during floods or heavy rains. If this condition cannot be satisfied, the clay should not be used as backfill material. With increasing stiffness of the clay, danger to the wall increases rapidly due to infiltration of water.

The following restrictions are to made :

a. Earth pressure computed by the use of pressure charts presented in Figures VI - 2.4 to VI - 2.5 include the effects of seepage pressures and various time-conditioned changes in the backfill material. The method does not take into account hydrostatic pressure due to submergence.
b. The procedure assumes the foundation to be relatively unyielding. If the wall is constructed on a very compressible material, such as soft clay, allowances must be made for greater pressures resulting from settlement. In this case backfill pressures computed for material types 1, 2, 3 and 5 should be increased by 50%. (Backfill type 4 has already taken this factor into consideration).
c. The point of application of the pressure resultant for backfill types, 1, 2, 3 and 4 is at a point 1/3 H from the base. If the backfill is type 5 (clay chunks) the pressure resultant is computed using a height of (H-4) instead of H, and is assumed to act at a point 1/3 (H-4) above the base.

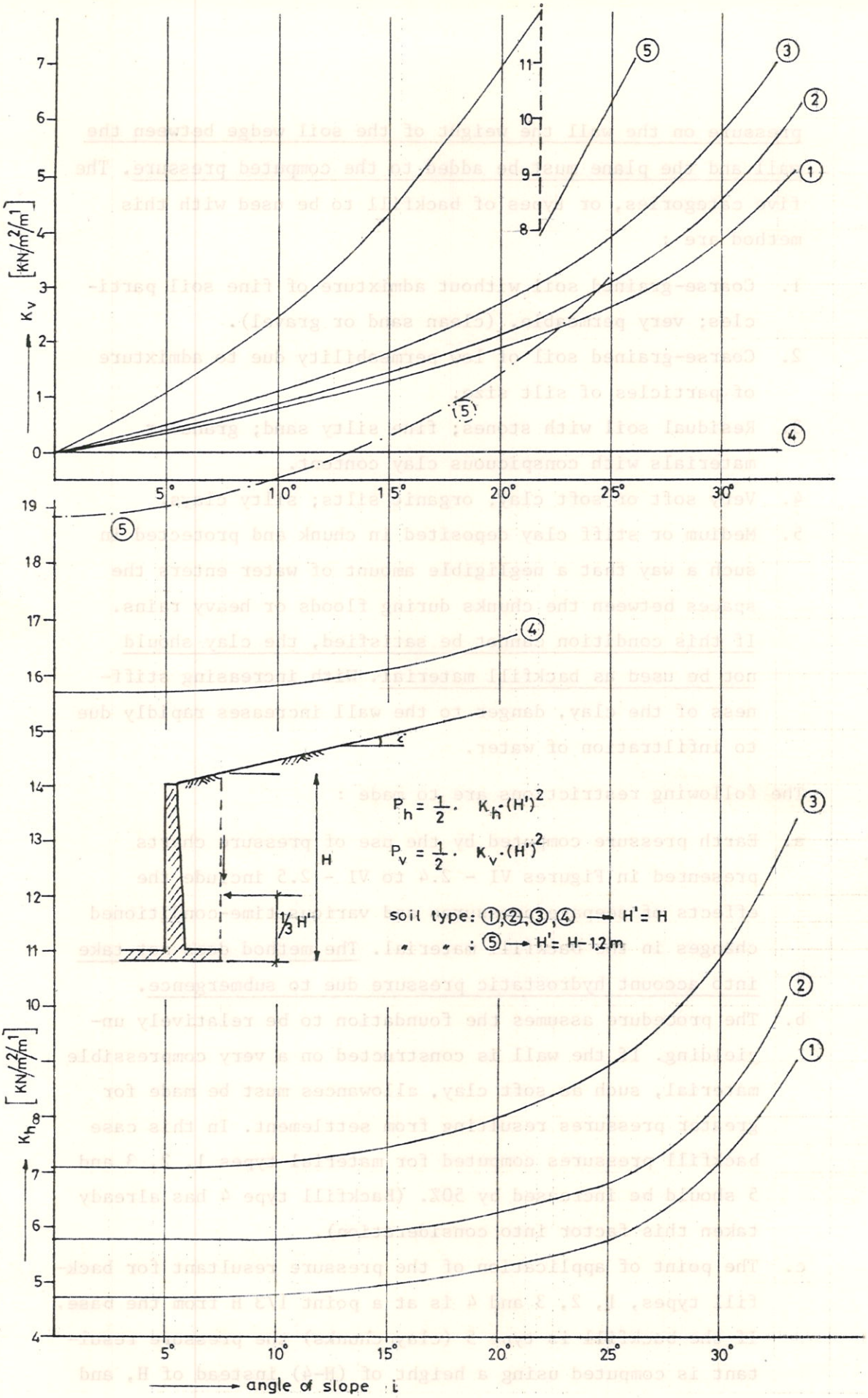

Figure VI - 2.4 Rankine earthpressure coefficients as developed by Terzaghi and Peck for plain sloping backfills.

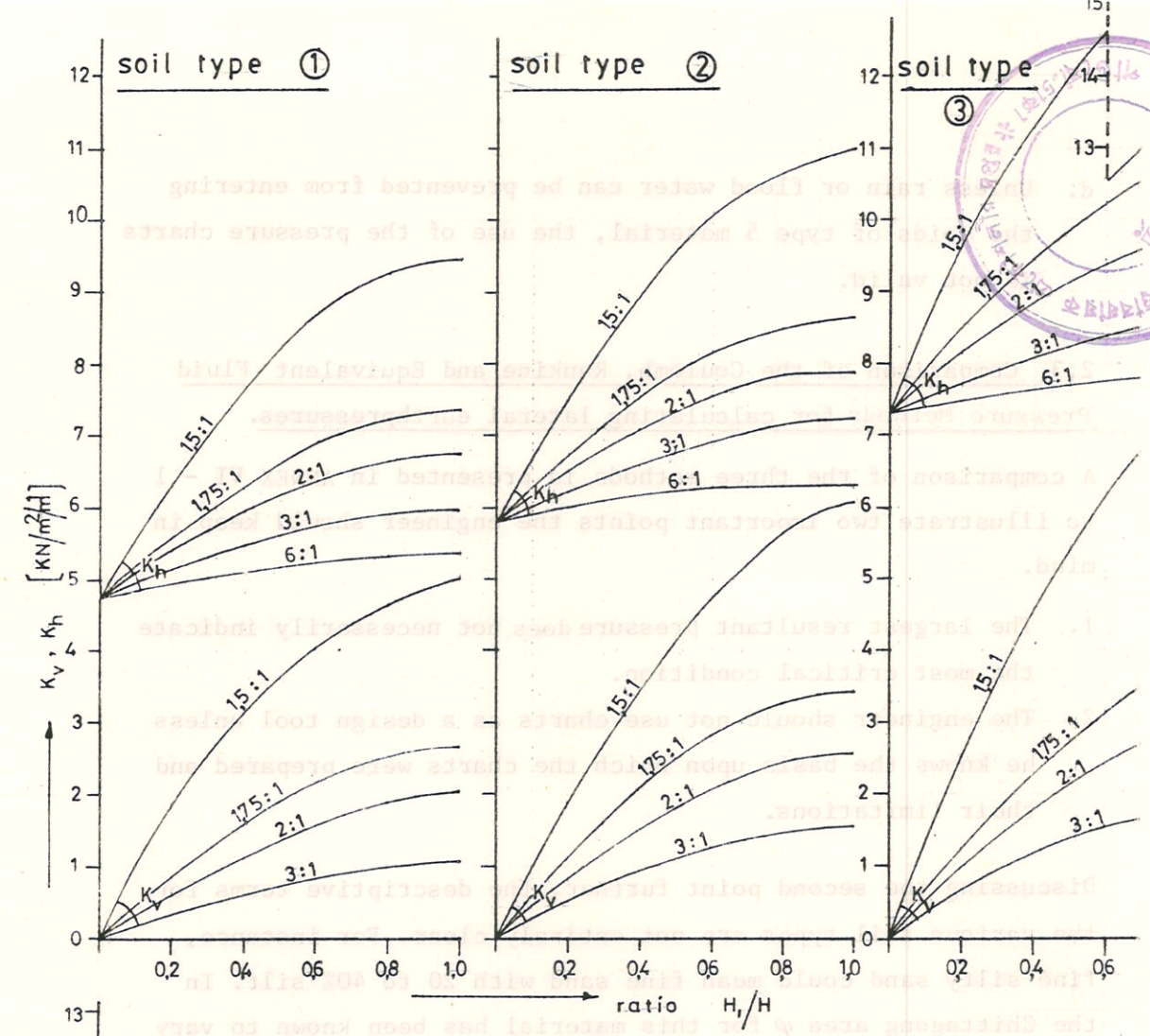

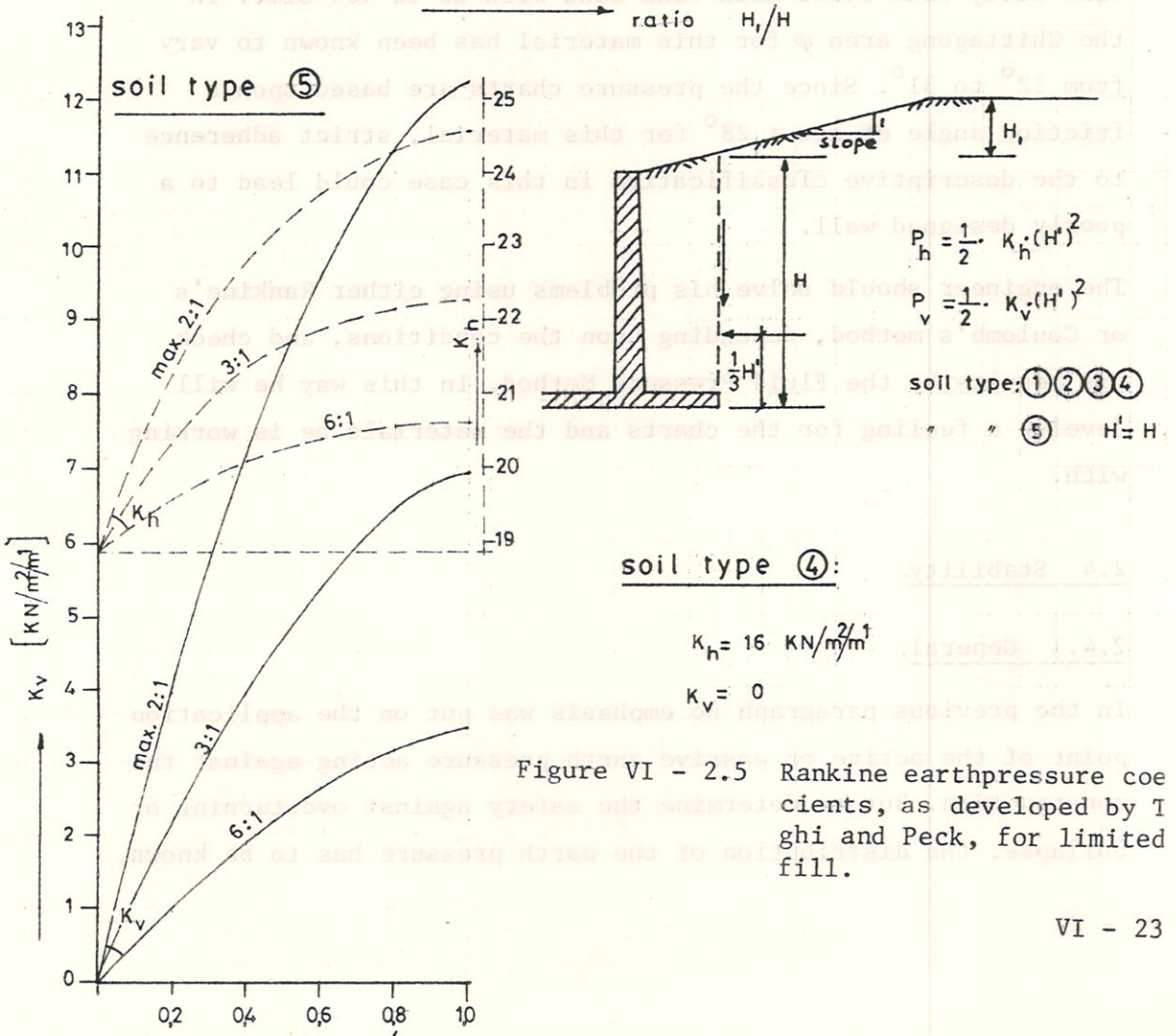

Figure VI - 2.5 Rankine earthpressure coe cients, as developed by T ghi and Peck, for limited fill.

d. Unless rain or flood water can be prevented from entering the voids of type 5 material, the use of the pressure charts is not valid.

2.3 Comparison of the Coulomb, Rankine and Equivalent Fluid Pressure Methods for calculating lateral earthpressures.

A comparison of the three methods is presented in ANNEX VI - 1 to illustrate two important points the engineer should keep in mind.

1. The largest resultant pressure does not necessarily indicate the most critical condition.
2. The engineer should not use charts as a design tool unless he knows the basis upon which the charts were prepared and their limitations.

Discussing the second point further, the descriptive terms for the various soil types are not entirely clear. For instance, fine silty sand could mean fine sand with 20 to 40% silt. In the Chittagong area φ for this material has been known to vary from 12° to 31°. Since the pressure charts are based upon a friction angle of about 28° for this material, strict adherence to the descriptive classification in this case could lead to a poorly designed wall.

The engineer should solve his problems using either Rankine's or Coulomb's method, depending upon the conditions, and check his results by the Fluid Pressure Method. In this way he will develop a feeling for the charts and the materials he is working with.

2.4 Stability.

2.4.1 General.

In the previous paragraph no emphasis was put on the application point of the active or passive earth pressure acting against the construction. But to determine the safety against overturning or collapse, the distribution of the earth pressure has to be known.

If straight sliding planes are considered, it can be derived that the pressure distribution of lateral earth pressure equals : $P_x = k_a \cdot \gamma \cdot x$ (see Figure VI - 2.6.)

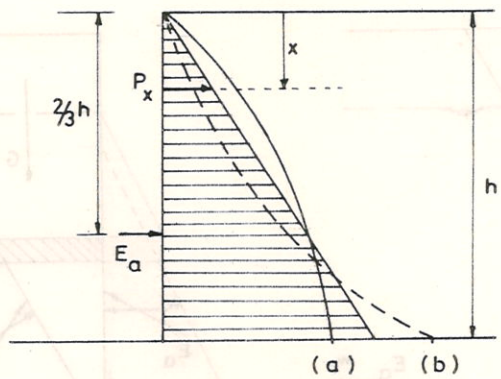

Figure VI - 2.6

The effective lateral pressure is a linear function of the depth x and the resultant earthpressure Ea is applied at a depth x = 2/3 h and equals: $E_a = k_a \cdot \frac{1}{2} \cdot \gamma \cdot h^2$.

However, this pressure distribution is only valid if the wall rotates around a point which is at the toe of the wall or deeper. If the wall rotates around a point that is higher than the toe-depth, then the pressure distribution is more complicated, and will have a form as indicated by (a) in Figure IV - 2.6. The same is applicable to the passive earth pressure distribution, which will be linear in case of a low laying pivot-point and will have a shape as indicated by (b) in case of a high laying pivot point.

If groundwater is present, it will have a very important influence on the pressure distribution against a structure.

If the groundwater is at rest, the pressure head in all points of the soil mass is the same and the water pressure is hydrostatic. So in all points of the boundary surface of the sliding wedge (along the structure and along the plane of rupture) the magnitude of the water pressure is known. The resultants w_1 and w_2 of

these water pressures, placed together with the weight G of the sliding wedge, give the resultant R (Figure VI - 2.7). R must be resolved in E_a and Q. The computation should be repeated for different slide planes to find the maximum E_a.

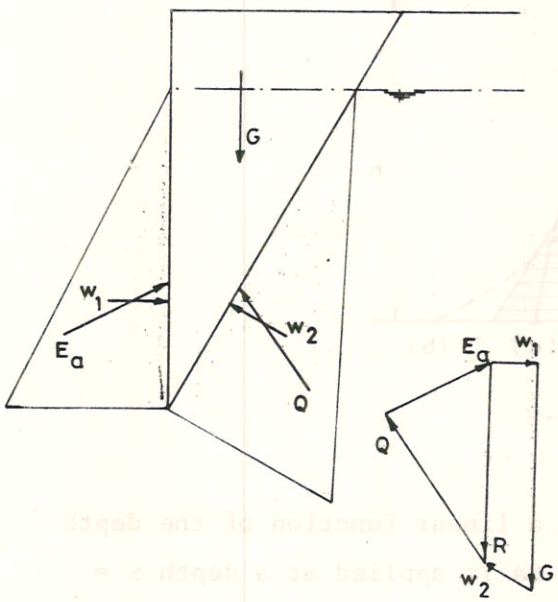

Figure VI - 2.7

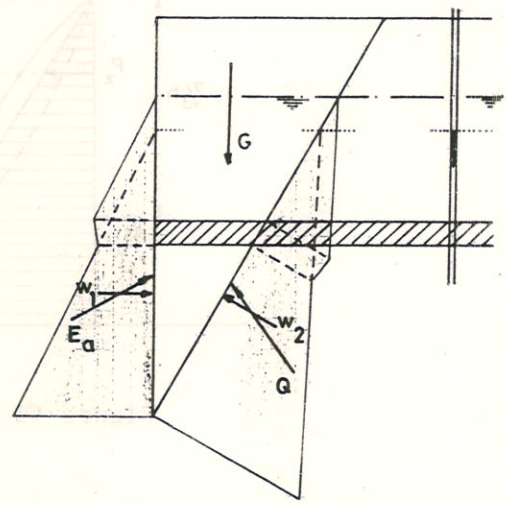

Figure VI - 2.8

In Figure VI - 2.8 a thin clay layer lies half way of the retaining structure. The pressure heads of the ground water in the water bearing strata above and below the clay layer are different.

If the groundwater is in motion, the computation becomes more difficult. The pressure head will differ from point to point. If the soil is homogeneous and permeability is the same in all directions, the water pressures along the wall and the slide plane may be determined by means of a flow net. In each point of inter-section of the slide plane and the equipotential lines the water pressure may be set out. Then the pattern of the water pressure at that plane is known.

Figure VI - 2.9 gives an example. From the force diagram of E_p it is directly seen that as the water pressures are greater, the passive earth pressure becomes very much smaller. This phenomenon may be important for lock walls, especially directly after empty-

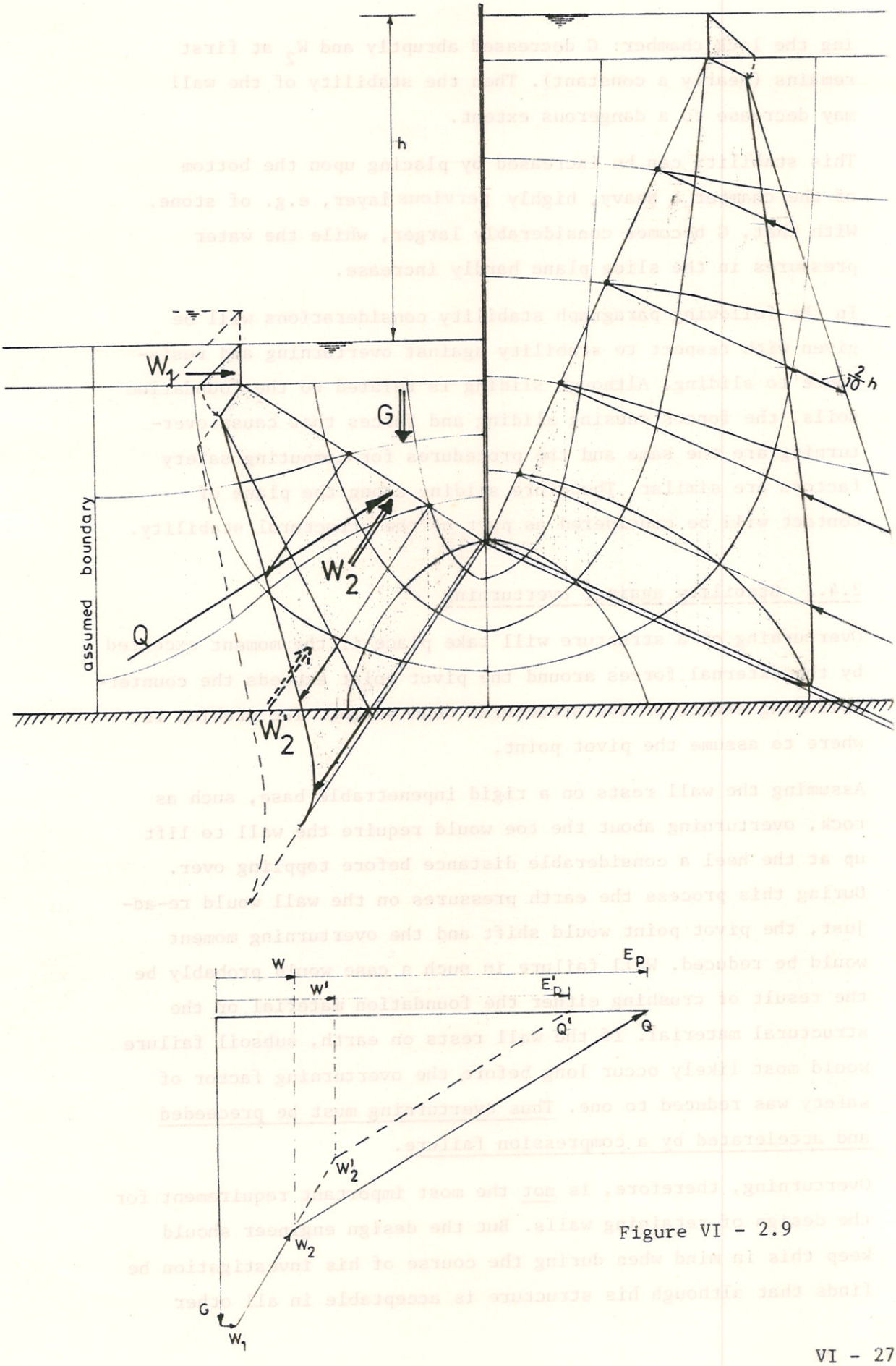

Figure VI - 2.9

ing the lock chamber: G decreased abruptly and W_2 at first remains (nearly a constant). Then the stability of the wall may decrease to a dangerous extent.

This stability can be increased by placing upon the bottom of the chamber a heavy, highly pervious layer, e.g. of stone. With that, G becomes considerably larger, while the water pressures in the slide plane hardly increase.

In the following paragraph stability considerations will be given with respect to stability against overturning and resistance to sliding. Although sliding is related to the foundation soils, the forces causing sliding and forces that cause overturning are the same and the procedures for computing safety factors are similar. Therefore sliding along the plane of contact will be considered as part of the structural stability.

2.4.2 Stability against overturning

Overturning of a structure will take place if the moment excerted by the external forces around the pivot point exceeds the counterbalancing effect of the structures dead weight. The problem is, where to assume the pivot point.

Assuming the wall rests on a rigid inpenetrable base, such as rock, overturning about the toe would require the wall to lift up at the heel a considerable distance before toppling over. During this process the earth pressures on the wall would re-adjust, the pivot point would shift and the overturning moment would be reduced. Wall failure in such a case would probably be the result of crushing either the foundation material or the structural material. If the wall rests on earth, subsoil failure would most likely occur long before the overturning factor of safety was reduced to one. Thus overturning must be preceeded and accelerated by a compression failure.

Overturning, therefore, is not the most important requirement for the design of retaining walls. But the design engineer should keep this in mind when during the course of his investigation he finds that although his structure is acceptable in all other

respects his factor of safety against overturning is 1.45 and the minimum allowed is 1.50. The structure does not necessarily have to be redesigned for this reason alone.

Figure VI - 2.10 shows how stability against overturning is to be checked. The safety factor to be applied is 1.5.

For Coulomb's theory : $S_{fo} = \dfrac{W_e . a}{P_v . c - P_h . b}$

For Rankine's theory : $S_{fo} = \dfrac{W_c . a + W''.f}{P_v . c + W'.d - P_h . b}$

In both cases moments acting clockwise are positive and the pivot point is assumed at the toe of the construction.

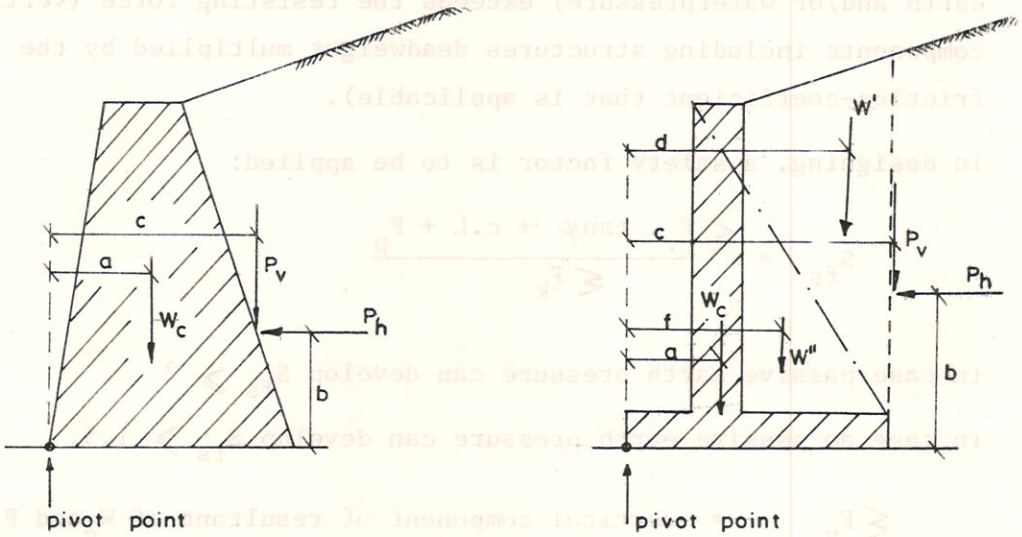

Figure VI - 2.10

2.4.3 Stability against sliding

A failure by sliding occurs when a retaining wall under load moves foreward by sliding along the contact line between soil and structure. If the under surface of the structure is smooth, the resistance to sliding is a function of frictional resistance and the adhesion between the foundation and the soil. However, foundation surfaces are almost always rough or purposely made

rough so that a sliding failure almost always occurs along a shear plane through the soil adjacent to the line of contact. Thus the shearing resistance of the foundation soil, rather than the frictional resistance, is used to compute sliding resistance.

If the underlying foundation soils are cohesionless materials, such as sand, gravel or silt, the shearing resistance will increase with depth and a sliding failure will most likely occur along the line of contact. If a cohesive soil underlies the foundation with a lower shearing strength than the soil along the line of contact, failure may occur along a curved plane through the soil.

Sliding occurs when the driving force (horizontal component of earth and/or waterpressure) exceeds the resisting force (vertical components including structures deadweight multiplied by the friction-coefficient that is applicable).

In designing, a safety factor is to be applied:

$$S_{fs} = \frac{\sum F_v \cdot \tan\varphi + c.L + P_p}{\sum F_k}$$

in case passive earth pressure can develop $S_{fs} \geqslant 2$

in case no passive earth pressure can develop $S_{fs} \geqslant 1.5$.

$\sum F_v$ = vertical component of resultant of W_c and P_v (see Figure VI - 2.10).

$\tan\varphi$ = friction coefficient

c = cohesion

L = width of foundation along which friction force will develop

P_p = passive earthpressure

F_h = horizontal component of resultant of driving forces.

If it is anticipated that any of the following conditions may develop, a reduced passive resistance should be used.

- Soil in front of the wall may be removed by scour or future construction operations.
- Soil in front of the wall may be removed during construction and later replaced, but inadequately compacted. Special care must be taken if the soil is sand, gravel or silt.
- Submergence due to a high ground water table will reduce the passive resistance of sand, gravel or silt.
- In order for full passive resistance to develop, the wall must undergo a certain amount of foreward movement. The required amount of movement may be intolerable.
- If vertical cracks can develop due to disiccation or root holes, forward movement may be considerable before passive resistance can develop.

In such cases it should be considered to what extent, if at all, passive earthpressure should be taken into account.

In the absence of tests, the shearing strength of soil may be taken as the total vertical force times a coefficient of friction. Coefficients of friction commonly used are,

- Sand or gravel without silt, $\tan \varphi = 0.55$
- Sand or gravel with silt, $\tan \varphi = 0.45$
- Silt, $\tan \varphi = 0.35$
- Clay, $\tan \varphi = 1/2$ the unconfined compressive strength q_u.

Special precautions are required for foundations on silt or clay. Stiff or hard clay should have its surface well roughened by deep scoring with a rake before placing concrete. If the foundation is to rest on other clays or silts, the top 4 inches of soil should be removed and replaced with sharp grained sand or brick chips. The coefficient or friction between the sand and soil can be assumed as 0.35. However, if $1/2\ q_u$ is less than the assumed frictional resistance, the lower value should be used.

Chapter 3. Earthpressure on top of structures.

3.1 Earthpressure on top of barrel section of sluices.

The earthpressure on top of the barrel of a box sluice not only consist of the weight of the earth which is located on top of the barrel. If a certain settlement is assumed, a part of the soil next to the body of earth on top of the barrel will contribute to the surcharge.

The surcharge should therefore be calculated to consists of the trapezoidal volume of earth between two planes rising from the edges of the barrel under and angle $\alpha = 45^{\circ} + \varphi/2$ in which φ is the angle of internal friction of the soil (see Figure VI - 3.1).

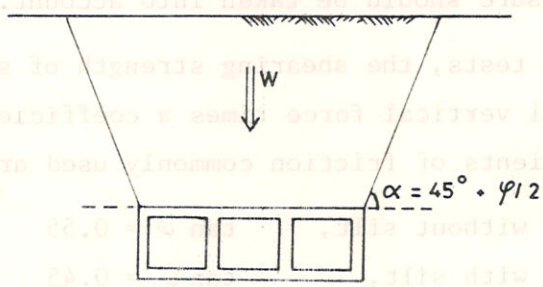

Figure VI - 3.1 Earthpressure on top of a sluice.

3.2 Earthpressure on top of burried pipes.

To calculate the earthpressure on pipes, formula's and graphs established by Roske are used. The formulas are valid for pipes which are laid in broad trenches or through a fill (embankment). The earthpressure on the pipe is then calculated as :

$$P_e = \lambda_d \cdot \gamma \cdot h \cdot D \quad KN/m$$

γ = unit weight of soil (KN/m^3)

h = depth of pipe (height of fill)

D = external pipe diameter

λ_d = load factor

The load factor λ_d depends on the settlement-deflection factor $r_{s.d.}$ and a factor $a = \frac{B}{2D}$ in which B is the width of the trench at the crest of the pipe (see Figure VI - 3.2).

The settlement-deflection-factor $r_{s.d.}$ is determined experimentally by Roske.

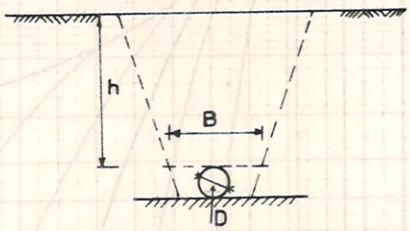

Figure VI - 3.2 Earthpressure on top of a pipe.

The values presented in Table VI - 3.1 can be maintained for $r_{s.d.}$:

Table VI - 3.1 Settlement deflection factor $r_{s.d.}$

$r_{s.d.}$	Concrete pipe
rigid foundation (piles)	1
normale foundation	0.5 - 0.8
foundation on weak soil	0.0.5

In practice it is generally adopted to apply a factor ($r_{s.d.}$ x a) = 0.35 for asbestos cement pipes. Figure VI - 3.3 shows load-factor λ_d for various values of h, D and ($r_{s.d.}$ x a).

The required value of trench-width at crestlevel of the pipe is determined with the help of Figure VI - 3.4, where B can be determined if h, D and ($r_{s.d.}$ x a) are known.

The earthload on top of the pipe calculated in this way can however be reduced for the following reasons.

- the bearing capacity of a pipe is largely dependent on the

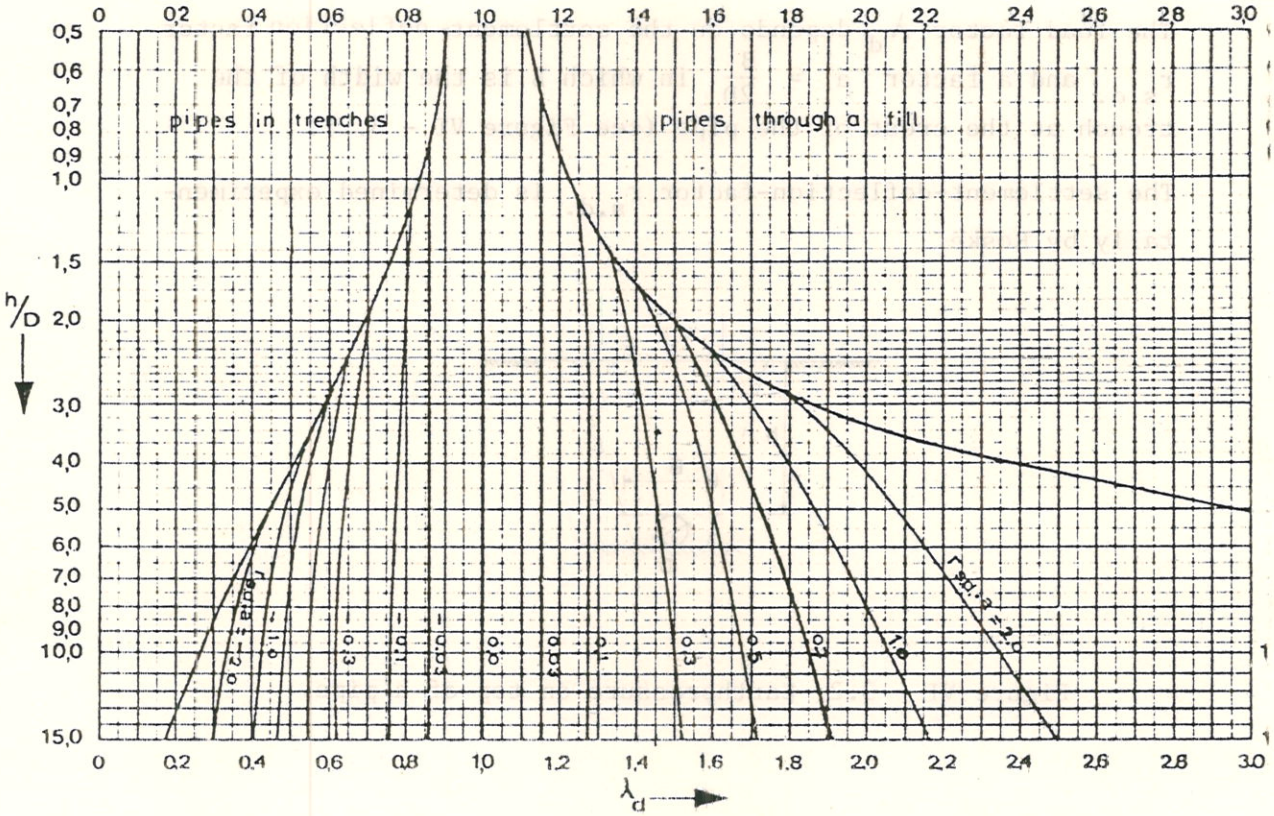

Figure VI - 3.3

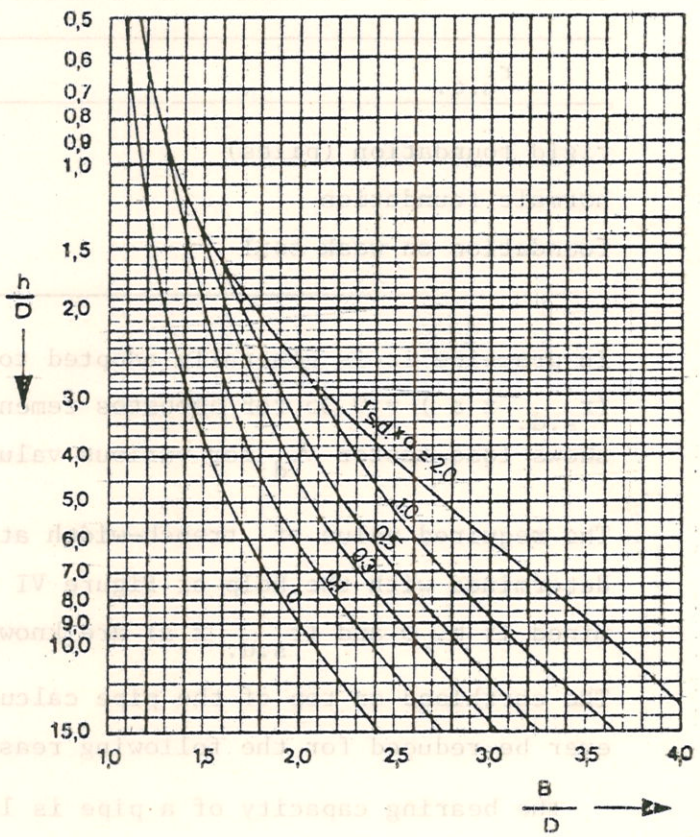

Figure VI - 3.4

bed on which the pipe is laid. The influence of support provided by the bed, is expressed in a factor K.

The following factors can be applied.

α	0°	60°	90°
K	1	1.4	1.7

if the bed consists of concrete, then K can be taken as 1.0, 1.6 and 2.2 respectively.

- Moreover Roske advised to introduce a factor Td for pipes in wide trenches or through fills. The factor Td can increase the bearing capacity if the lateral pressure of the trenchfill can "support" the vertical pressure.

  Table VI - 3.2 gives values for Td.

Table VI - 3.2 Td factors, increasing pipe bearing capacity

	internal friction angle φ	Support angle α 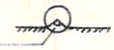					
		30°	60°	90°	120°	150°	180°
bed is loose (loose earth, sand)	20	1.36	1.45	1.51			
	30	1.27	1.27	1.30			
	40	1.13	1.16	1.18			
bed is stiff (concrete)	20	1.43	1.58	1.35	1.37	1.37	1.27
	30	1.25	1.37	1.21	1.23	1.22	1.17
	40	1.15	1.21	1.13	1.14	1.14	1.10

<u>example</u>: $D = 0.15$ m, $\gamma = 18.8$ KN/m³, $h = 4.20$ m

from Figure VI - 3.4 : $\frac{h}{D} = \frac{4.2}{0.15} = 28$

$\rightarrow \frac{B}{D} = 3.8$, $B = 3.8 \times 0.15 = 0.60$ m

$$\left.\begin{aligned} r_{s.d.} &= 0.5 \\ a &= \frac{B}{2D} = \frac{0.6}{0.3} = 2.9 \end{aligned}\right\} \quad (r_{s.d.} \times a) = 0.95$$

from Figure VI - 3.3 : $\lambda d = 2.25$

$$P_e = \lambda d . \gamma . h . D.$$

$$= 2.25 \times 18.8 \times 4.2 \times 0.15 = 26.65 \text{ KN/m'}$$

the actual load $P_{ea} = \frac{P_e}{K \times Td} = \frac{26.65}{1.4 \times 1.35} = 14.1$ KN/m'

If $(r_{s.d.} \times a) = 0.35$ is used (for asbestos cement pipes) and no lateral support is assumed then :

$$P_e = \lambda d . \gamma . h . D$$

$$= 1.6 \times 18.8 \times 4.2 \times 0.15 = 18.95 \text{ KN/m'}$$

$$P_{ea} = \frac{P_e}{k} = \frac{18.85}{1.4} = 13.54 \text{ KN/m'}$$

Normally a safety factor of 1.5 is applied and thus the pipes should be able to withstand a earthload of 20.3 KN/m' to be considered as a lineload as indicated in Figure VI - 3.5.

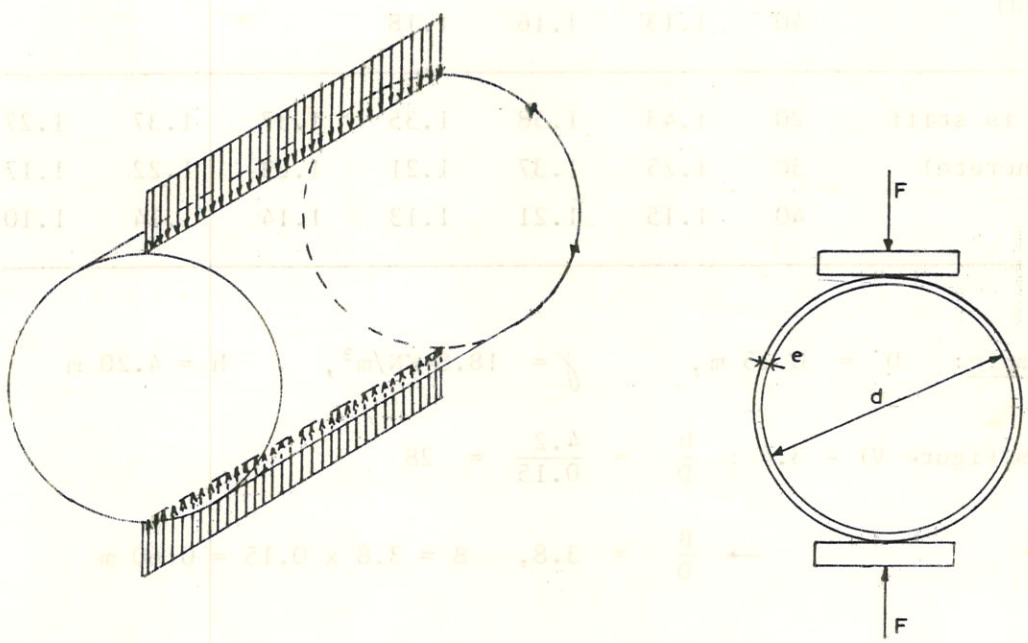

Figure VI - 3.5

To test a pipe, three rings are cut, out of three pipes, each ring 20 cm long and with parallel cuts perpendicular to the pipe-axis. The rings are loaded in radial direction between two parallel plates.

The radial compression strength σ_s is then :

$$\sigma_s = \frac{F.\ (d + e)}{a.\ e^2} \times 0.955\ (N/mm^2)$$

in which: F = load (N)

d = internal diameter (mm)

e = wall thickness at crack (mm)

a = length of the ring (200 mm)

In our example , the radial compression strength should therefore be $\sigma_s \geqslant 9.34\ N/mm^2$.

Chapter 4. Design of shallow foundations.

4.1 General.

As already indicated in paragraph 1.7 of Chapter 1, it should be investigated if the soil underlying the structure is capable of supporting the loads imposed on it via the foundation. In this respect the behaviour of the soil should be analysed concerning:

- the bearing capacity, or strength or the soil
- the settlements to be expected under certain load conditions.

Normally, the bearing capacity will not be the limiting factor in foundation design, more often the settlements that are calculated to occur under the imposed load, will determine the type and size of foundation.

4.2 Bearing capacity of soil.

According to Hansen, the ultimate bearing capacity or the ultimate soil pressure that a soil can sustain without rupture due to shear failure can be expressed as (ref. 1) :

$$Q_{ult} = c.N_c.S_c.\ d_c + \bar{q}.\ N_q.\ s_q.\ d_q + \tfrac{1}{2}.\gamma.\ B.N_\gamma\ .\ s_\gamma$$

in which factors influencing the bearing capacity, like depth and shape of foundation, have been taken care of by means of coefficient s and d, and c = cohesion and N_c, N_q and N_γ are bearing capacity factors (see Table VI - 4.1 and Figure VI - 4.1). In case $\varphi = 0$, the formula is changed for :

$$Q_{ult} = 5.14 \times c\ (1 + s'_c + d'_c) + \bar{q}$$

Table VI - 4.1 Depth and shape factors for Hanson's formula for $Q_{ult.}$

Shape factor	depth factor	
	$D \leqslant B$	$D > B$
$s_c = 1 + \frac{N_q}{N_c} \cdot \frac{B}{L}$	$d_c = 1 + 0.4 \frac{D}{B}$	$d_c = 1 + \frac{0.4}{\tan D/B}$
$s_q = 1 + \frac{B}{L} \cdot \tan\varphi$	$d_q = 1 + 2 \tan\varphi \cdot (1-\sin\varphi)\ 2.\frac{D}{B}$	$d_q = 1 + \frac{2 \tan\varphi . (1-\sin\varphi)^2}{\tan D/B}$
$s_\gamma = 1 - 0.4 \left(\frac{B}{L}\right)$		
$s'_c = 0.2 \frac{B}{L}$	$d'_c = 0.4 \frac{D}{B}$	$d'_c = \frac{0.4}{\tan D/B}$

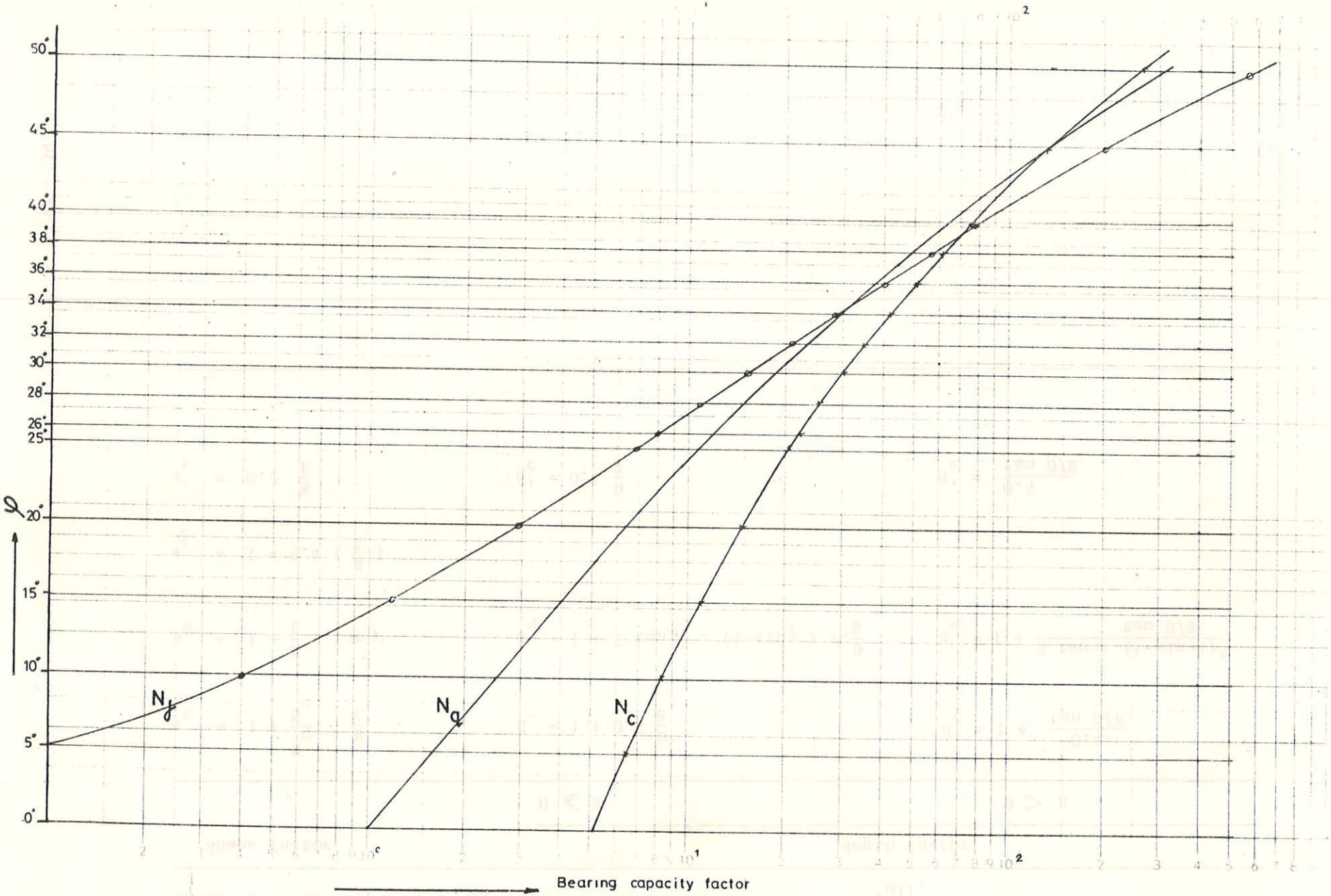

Figure VI - 4.1 Bearing capacity factors.

Furthermore :

B = width of the foundation (least-dimension)

D = depth of foundation below original groundlevel

$\bar{q}$ = effective surcharge = D x γ (KN/m^2)

γ = effective unit weight of soil

L = length of foundation (largest-dimension)

In the Hansen equation the effective unit weight of soil should be used. However, when the water table is level with the base of the foundation, then the saturated unit weight should be taken. When the water table is at some distance below the foundation then a reduction factor F_w is to be applied.

$$\gamma = F_w . \gamma sat$$

$$F_w = 0.5 + \frac{d_w}{B. \tan (45 + \varphi/2)}$$

d_w = distance between foundation and watertable.

To calculate the effective surcharge pressure the unit weight as determined from the soil samples should be applied or a division has to be made to include partly γsat and the natural unit weight.

In case a foundation slab is eccentrically loaded, the dimensions of the footing should be reduced in the calculations for ultimate bearing capacity. If eccentricity of load is e_x and e_y then, the dimensions will be : (see Figure VI - 4.2)

$$B' = B - 2.e_x$$

$$L' = L - 2.e_y$$

and area $A_f' = B'. L'$

e_x and e_y are the offset of the forces (vertical) from the centre of the footing.

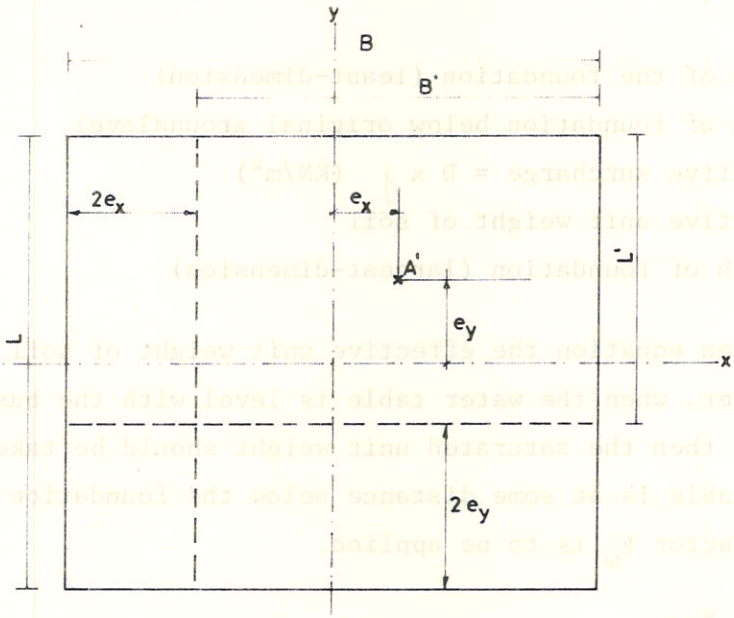

Figure VI - 4.2 Eccentrically loaded foundation.

It is suggested to use the above presented method both for cohesive and non-cohesive soils as a simple means to estimate the soils bearing capacity.

To establish the bearing capacity of cohesion less soils such as sand, sand-gravels, and sand with some silt, SPT values can be used. The method however is largely empirical. The allowable bearing capacity can be determined from the following equations. (see Figure VI-4.3).

$$q_a = \frac{N}{2.5} \cdot k_d \qquad (B \leqslant 4 \text{ ft})$$

$$q_a = \frac{N}{4} \; \frac{(1 + B)^2}{D} \cdot k_d \qquad (B > 4 \text{ ft})$$

in which q_a is the allowable increase in soil pressure, expressed in kips/sqft,*) for an estimated maximum settlement of 1 inch and $k_d = 1 + \frac{D}{3B}$ with a maximum of $k_d = 1.33$.

*) 1 kips/sq.ft. = 1 ksf = 47.9 KN/m^2

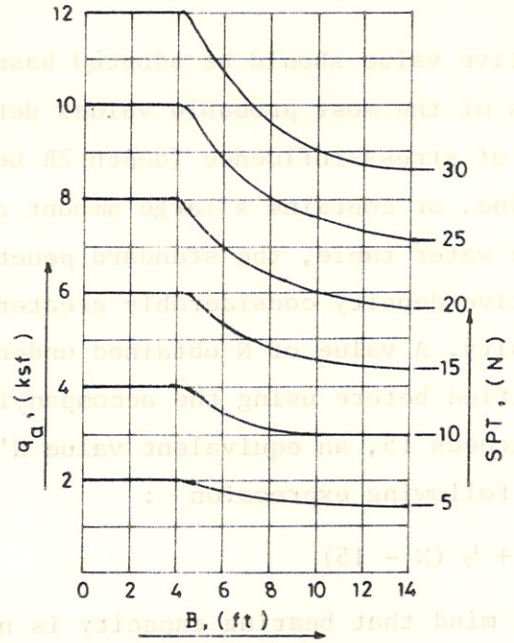

Figure VI - 4.3 Allowable bearing capacity for surface loaded footings with maximum 2.5 cm settlement.(ref.1).

The equations and Figure VI - 4.3 are based on the empirical relation between SPT values and angle of internal friction φ, shown in Table VI - 4.2. The relation may also be used directly to determine φ from SPT values of cohesion less soils; φ can then be used in the Hansen equation.

Table VI - 4.2 Empirical values for φ, based on SPT values for cohesionless soils

Description	very loose	loose	medium	dense	very dense
Relative density	0	0.15	0.35	0.65	0.85 1.0
SPT-Value N		4	10	30	50
Approximate angle of internal friction	25-30°	27-32°	30-35°	25-40°	38-43°

*) 1 kips/sq.ft. = 1 ksf = 47.9 KN/m²

For N, a representative value should be adopted based on a rough statistical analysis of the most probable values determined by borings in the zone of stress-influence (depth 2B below footing). When sand is very fine, or contains a large amount of silt, and is located below the water table, the standard penetration tests may indicate a relative density considerably greater than the actual relative density. A value of N obtained under these conditions must be modified before using the accompanying charts. Therefore, when N exceeds 15, an equivalent value N' should be determined from the following expression :

$$N' = 15 + \frac{1}{2}(N - 15)$$

It should be kept in mind that bearing capacity is not likely to control the foundation design. Settlements will be much more determinant and bearing pressures to limit settlements are likely to be less than the allowable value obtained from any bearing capacity calculation.

An example of a shallow foundation design is presented in ANNEX VI - 2.

4.3 Settlements.

4.3.1 General.

All structures, except those on solid rock, will experience a certain amount of settlements, which are of two general types :

- immediate settlements, taking place during construction and when applying the loading,
- consolidation; settlements taking place over a long period.

Settlements may be uniform, with the foundation remaining plane, or differential, with a difference in settlement between two points of the foundation.

Uniform settlements will not cause significant problems as long as the amount of settlement remains within the tolerance.

Differential settlements however may be a problem as was illustrated in Chapter 1, paragraph 1.7.

It is generally accepted that for hydraulic structures the tolerable total settlement is 5 cm and that the maximum differential settlement may not exceed 3/4 of the computed total settlement. However, it should be kept in mind that depending on the size, type and importance of a structure, these figures should be adopted.

4.3.2 Uniform immediate settlements

Uniform immediate settlements of soils such as non saturated clays and silts, and saturated or non saturated sands and clayey sands can be computed from :

$$S = q.\ B.\ \frac{1 - \mu^2}{E_s}.\ I_w$$

in which : S = settlement

q = intensity of contact pressure

B = least lateral dimension of foundation

I_w = shape and rigidity factor of foundation (see Table VI - 4.3)

E_s, μ = elastic properties of the soil (see Table VI-4.4 and 4.5)

The factor E_s can be obtained from stress-strain-plots from triaxial tests, or if to be based on SPT values :

$$E_s = 4.9\ (N + 15) \text{ for sand } (kg/m^2)$$

$$E_s = 2.9\ (N + 5) \text{ for clayey sands } (kg/m^2)$$

However, laboratory test have indicated that E_s determined by unconsolidated undrained triaxial tests can be 0.7 - 1 times the actual E_s.

Because the settlement formula for S is meant for foundations on groundlevel, a correction factor F_3 has to be applied if the foundation is at depth D into the ground; Figure VI - 4.4 indicates the correction factor. The corrected settlement becomes then : $S_f = S \times F_3$.

Table VI - 4.3 I_w-factor for rigid foundation.

Shape L/B	I_w	I_m
0.2		2.29
0.5		3.33
1.0	0.88	3.7
1.5	1.06	4.12
2	1.20	4.38
5	1.7	4.82
10	2.1	4.93
100	3.4	5.06

Table VI - 4.4 Typical of E_s (= $\frac{\sigma}{\varepsilon}$ = $\frac{\text{stress}}{\text{strain}}$), stress/strain modulus.

Soil		E_s (kg/m^2)
Clay :	very soft	3-30
	soft	20-40
	medium	45-90
	hard	70-200
	sandy	300-425
Sand :	silty	50-200
	loose	100-250
	dense	500-1000
Silt :		20-200

Table VI - 4.5 Typical ranges of μ ($\mu = \frac{\varepsilon_3}{\varepsilon_1} = \frac{\text{lateral strain}}{\text{longitudinal strain}}$), μ = Poisson's ratio.

Soil		μ
saturated clay		0.4-0.5
unsaturated clay		0.1-0.3
sandy clay		0.2-0.3
silt		0.3-0.35
sand :	dense coarse	0.15
	dense fine	0.25

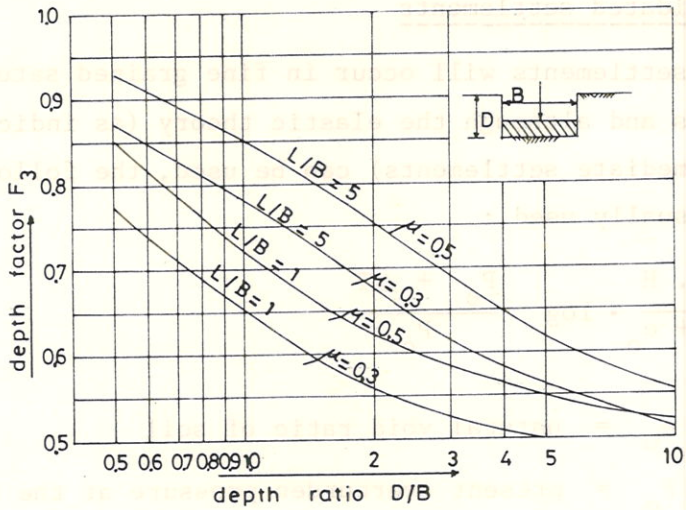

Figure VI - 4.4 Correction factor F_3 for footing at depth D.

4.3.3 Differential settlements

For differential settlements, the influence of rotation due to excentric loads is expressed as :

$$\tan \varphi = \frac{V.e}{B.L^2} \times \frac{(1 - \mu^2)}{E_s} \times I_m \text{ (see Figure VI - 4.5)}$$

The differential settlement $S_d = L.\tan \varphi$. For factor I_m, Table VI - 4.3 should be consulted.

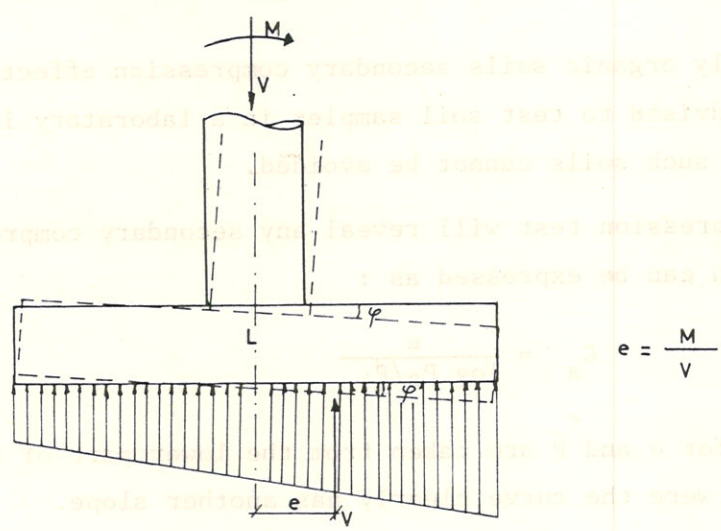

Figure VI - 4.5 Rotation of a rigid footing

4.3.4 Consolidated settlements

Consolidated settlements will occur in fine grained saturated cohesive soils and although the elastic theory (as indicated to calculated immediate settlements) can be used, the following equation is usually used :

$$S = \frac{C_c \cdot H}{1 + e_o} \cdot \log \frac{P_o + \Delta P}{P_o}$$

in which : e_o = natural void ratio of soil

P_o = present overburden pressure at the centre of the considered soil layer

ΔP = increase in soil pressure at centre of soil water

H = height of soil layer(s) subject to compression

C_c = compression index.

To be able to use this equation, it is necessary to establish the required soil properties by a consolidation test.

$$C_c \text{ (= compression index)} = \frac{\Delta e}{\log P_2/P_1}$$

(see Volume II, Chapter 6, paragraph 6.3.3).

In highly organic soils secondary compression effects may develop. It is advised to test soil samples in a laboratory in case foundation on such soils cannot be avoided.

The compression test will reveal any secondary compression index C_a which can be expressed as :

$$C_a = \frac{e}{\log P_2/P_1}$$

Values for e and P are taken from the lower part of the compression diagram were the curve clearly has another slope.

The secondary compression is then :

$$S_c = \frac{C_a \cdot H}{1 + e_o} \log \frac{t_{total}}{t_{prim}}$$

in which : S_c = secondary settlement

t_{total} = service life of construction

t_{prim} = time up to the end of the primary settlement.

Consolidation test are expensive and time consuming. If for these reasons it is not justifiable to do these test for smaller structures, an empirical method as presented below, can be used.

The allowable bearing capacity for non-cohesive soils as derived from the Meyerhoff equations for surface loaded footings, resulting in a maximum settlement of 2.5 cm, are plotted in Figure VI-4.3. The figures from the graph should be corrected for the depth of the foundation with factor F_3 as indicated in paragraph 4.3.2. (Figure VI - 4.4).

The effect of water is already included as an effect on N and no additional adjustments are required.

For foundations on clay the Table VI - 4.6 can be used. Values shown are sufficiently safe to keep differential settlements within 2 cm (3/4 times the maximum settlement of 2.5 cm), provided the soil is not influenced by loadings from an adjacent structure, and provided the soil beneath the foundation is not a soft or very soft normally loaded clay. If such is the case then consolidation tests have to be executed in order to acquire the required information.

Table VI - 4.6 q_a for clay.

description	N	q_a	q_a(ksf)*
very soft	<2	<0.6	<0.44
soft	2-4	0.6-1.2	0.44-0.9
medium	4-8	1.2-2.4	0.9 -1.8
stiff	8-15	2.4-4.8	1.8 -3.6
very stiff	15-30	4.8-9.6	3.6 -7.2
hard	>30	>9.6	>7.2
		Square footings	Continuous footings

* inclusive safety factor 3

1 ksf = 47.9 KN/m^2

Chapter 5. Design of Deep Foundation.

5.1 Introduction.

If settlements of a foundation are expected to be too big for the construction to allow, or bearing capacity is very poor and there are no other possibilities to reduce the settlements, a pile foundation has to be designed.

Piles can be made of wood, steel or concrete and are usually driven with a succession of blows on top of the pile. Also it is possible to lower piles with a water jet or with the help of vibrators.

- Wooden piles, preferably should be of first quality sundari bullah. A straight line between top and butt should be within the pile shaft.

Table VI - 5.1 Specification for wooden piles

length	diam. at top of of the tree	diameter at butt of the tree
$<$7.5 m	0.15 m	0.25 m
$>$7.5 m	0.15 m	0.30 m

Permissable load on wooden piles varies from 100-200 KN per pile, depending on the allowable design stress in the type of wood, the tip cross-section of the pile and the structure of the soil. For point bearing piles the allowable design load is the tip cross-section of the pile times the allowable stress in the type of wood. For combined friction end-bearing piles the thus calculated pile capacity may be increased. Timber piles should be placed below the lowest watertable. Piles will rot above water level.

- Concrete piles are made of reinforced concrete, cast in a square form. Reinforcement is to be designed on picking up forces, forces during transport and any tension forces during driving. The allowable load on a concrete pile can be calculated from the

cross-section area of steel and concrete multiplied by respective allowable material stresses. Minimum dimension of pile cross-section is 20 x 20 cm^2.

- Steel piles are usually round tubes or standard H or I profiles. Hollow piles behave vitually the same as closed-end piles during driving. Allowable loads are calculated in the same way as for concrete piles. Hollow steel piles are usually filled up with concrete after driving.

When designing a pile foundation, it should carefully be considered which method of execution of the work is the best for the specific conditions at the construction site. It might be better to design a foundation on many short piles, which are easier to handle and less vulnerable during transport and driving, than the application of long piles. Of course the soil conditions will influence the possibilities greatly.

5.2 Bearing capacity of piles.

5.2.1 General.

Normally the pile reaction force to resist the pile load is delivered partly by skin friction, partly by toe resistance. If the toe resistance is predominant, piles are called and bearing piles. If skin friction is predominant they are called friction piles. Experience teaches that if a pile is surrounded entirely by very soft soil, lateral support will be sufficient to prevent buckling. If the pile or part of the pile is surrounded by water, the possibility of buckling must be considered.

To determine the bearing capacity of a pile a loading test can be performed during which settlement of the pile is recorded as the load is increased in steps. Loading tests are very costly and consume a lot of time and can only be justified for highly expensive structures. Moreover, it is not possible to distinguish skin friction and toe resistance separately. Sometimes these two have to be known, for instance in case where the soil is expected to settle and thus will contribute to the pile load with a downward force (negative skin friction). Toe resistance alone has to withstand

all forces including the negative skin friction.

Negative skin friction may develop in compressible soils on which additional load is being applied. The pile may remain stable and the surrounding soil will move downward due to compression, causing downward friction forces on the pile.

Furthermore, if a pile is driven as part of a group, the soil may be compacted. In this case future settlement of the soil may be less and bearing capacity of the subsoil may increase, resulting in an improved load settlement response of the piles.

Because of all the uncertainties and the rather high costs, loading test is seldom executed.

Another means of determining the bearing capacity of a pile is to deduce it from the penetration during driving. Several formulas have been developed, some empiric, some based on Newton's impact theories, both for plastic and elastic impact.

One of those formulas expresses the admissible pile load as :

$$P_a = \frac{W^2 . H}{F.s\ (P+W)}$$

in which :

P_a = admissible pile load
W = weight of piling hammer
H = drop of hammer
F = safetyfactor (5-6)
s = penetration of pile by one hammer blow
P = weight of the pile.

The formula is known as Eytelwein's formula or the Dutch pile formula.

A modern technique to design a pile foundation is based on soil borings in which S.P.T. values are recorded.

The ultimate pile resistance is then computed as :

P_u = point bearing + skin resistance = $P_{pu} + P_s$

For displacement piles, Meyerhof proposed the following approximations based on SPT - values.

P_{pu} = 383 x N.A_p (KN)

P_s = 1.92 x N.A_s (KN)

A_p = pile's cross-section in m^2

A_s = pile's surface in m^2

N = S.P.T. value

For piles in layered deposits, consisting of both cohesive and non-cohesive soils, one must compute the contribution of seperate layers for skin resistance and evaluate the point bearing capacity for that layer in which the point terminates. The total pile capacity is the sum of resistances from all layers. Friction piles in silt and silty sands require additional considerations :

- if the dry density is more than 12.7 KN/m^3, the bearing capacity might be sufficient to avoid a pile foundation.
- if dry density is lower than 12.7 KN/m^3 then it may be necessary to use point bearing piles which penetrate through the silt layer to a firm under lying stratum.

Static pile bearing capacity formulas as given in handbooks are only applicable if soil properties are carefully determined. Common practice is to use unconfined undrained ($\varphi = 0$) compression test on cohesive soil samples to determine cohesion of the soil and penetration test (SPT) for cohesionless soils.

5.2.2 Pile capacity in cohesive soils

For cohesive soils, the ultimate pile capacity becomes :

$$P_u = P_{up} + P_s$$

$$P_u = c.N_c.A_p + \alpha.c.p.\ L$$

in which c = average cohesion for the soil layer of interest

N_c = bearing capacity factor, (see Figure VI-4.1) take N_c minimum 9.

A_p = area of pile point

α = adhesion factors (see Figure VI - 5.1 and Table VI - 5.2)

p = pile perimeter

L = pile length

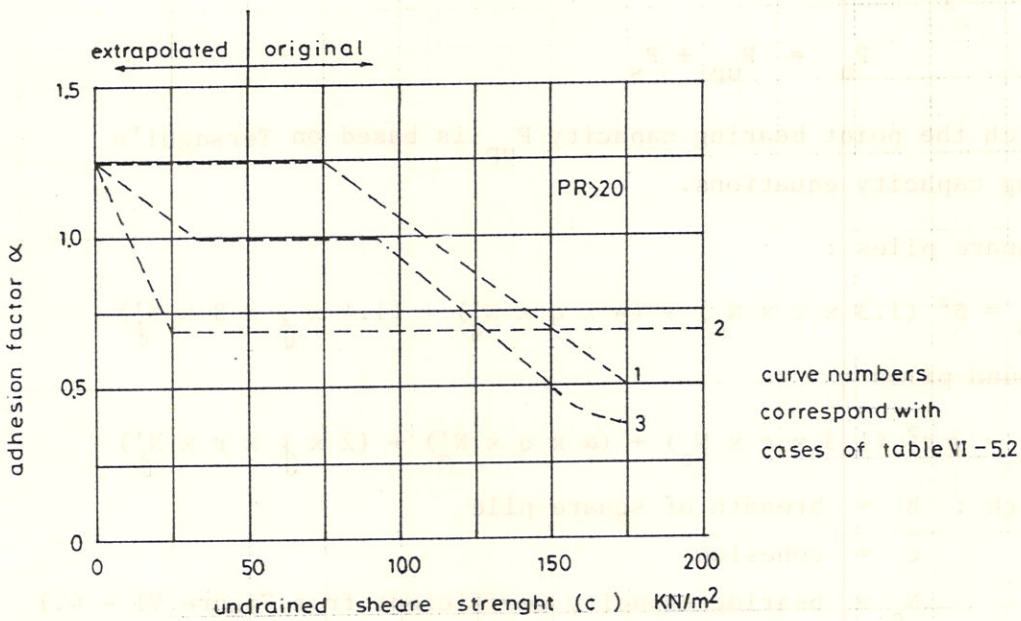

Figure VI - 5.1 Relationship between soil and adhesion factor.

The allowable pile capacity is obtained as :

$$P_a = \frac{P_u}{F}$$

in which P_a should be compared against the pile-material capacity and F is a safety factor as 4 for cohesive soils because of the larger uncertainties in pile design as compared with shallow foundation design.

Table VI - 5.2 Values of adhesion factor α for piles driven into stiff cohesive soils (ref.1).

Case	Soil condition	PR=Penetration Ration *)	α
1	Sand/sandy gravel overlying stiff to very stiff cohesive soils	<20	1.25
2	Soft clays or silt overlying stiff to very stiff cohesive soils	8<PR<20	0.40
3	Stiff to very stiff cohesive soils, no overlying strata	8<PR<20	0.40

*) PR = Penetration Ratio = $\frac{\text{depth of penetration into cohesive soil}}{\text{diameter of pile}}$

5.2.3 Pile capacity in cohesion-less soils

For cohesion-less soils the ultimate bearing capacity of piles can be computed as :

$$P_u = P_{up} + P_s$$

in which the point bearing capacity P_{up} is based on Tersaghi's bearing capacity equations.

For square piles :

$$P_{up} = B^2 (1.3 \times c \times N_c) + (\alpha \times q \times N'_q) + (1.4 \times \gamma \times B \times N'_\gamma)$$

For round piles :

$$P_{up} = \pi r^2 (1.3 \times c \times N_c) + (\alpha \times q \times N'_q) + (2 \times \gamma \times r \times N'_\gamma)$$

in which : B = breadth of square pile

c = cohesion

N_c = bearing capacity coefficient from Figure VI - 4.1

N'_q, N'_γ = bearing capacity coefficient.
if $\varphi < 20°$ use Figure VI - 4.1, if $20° < \varphi < 45°$ then use Figure VI - 5.2

q = over burden pressure ($\gamma \times D$)

α = adhesion factor (see Figure VI - 5.1)

r = radius of round pile.

The skin friction is calculated with :

$$P_s = \int_p^L . \bar{q}. K. z. (\tan \delta). dz$$

which is in principle calculating the lateral earth pressure against the pile perimeter p using friction coefficient tan δ . (for δ see Table VI - 5.3).

Furthermore is :

$\bar{q}$ = γ'. z (effective overburden pressure on element z)

K = earth pressure coefficient

K = 0.6 for silty sands - fine silty sands; 1.25 for other deposits.

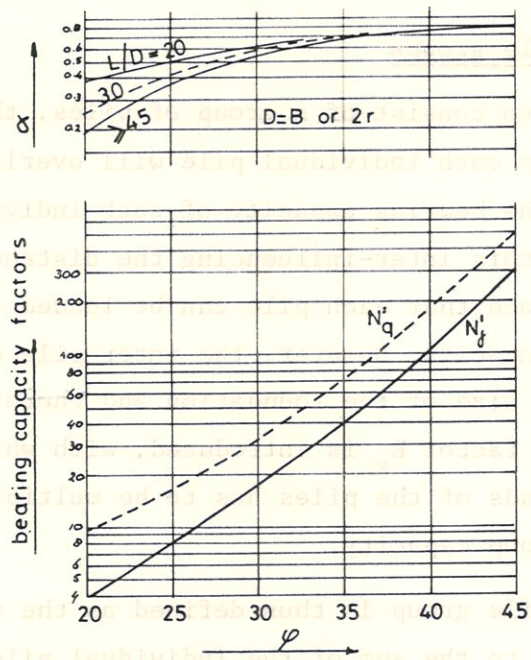

Figure VI - 5.2 Bearing capacity factors for deep foundations (ref.1).

Table VI - 5.3 Friction angle δ.*)

interface material	δ (in degrees)
mass concrete or masonry on :	
- gravel-sand mixture, coarse sand	29-31
- clean fine to medium sand, silty medium to coarse sand,	24-29
- clean fine sand, silty or clayey fine to medium sand	19-24
- fine sandy silt, non plastic silt	17-19
- medium stiff and stiff clay and silty clay	17-19
- very stiff and hard preconsolidated clay	22-26
formed concrete or concrete sheetpile on :	
- gravel sand mixtures	22-26
- clean sand, silty sand-gravel misture	17-22
- silty sand or sand mix with silt or clay	17
- fine sandy silt, non plastic silt	14

*) based on NAFAC (1971)

5.2.4 Capacity of pile groups

When a foundation is to consist of a group of piles, the soil pressures developed by each individual pile will overlap each other and influence the bearing capacity of each individual pile negatively. To avoid this inter-influencing the distances between the piles should be such that each pile can be loaded to its individual calculated capacity. However, the inter-pile distance may be limited by the size of the foundation and therefore a pile group efficiency factor E_g is introduced, with which the sum of permissable loads of the piles has to be multiplied to arrive at the pile group capacity.

The efficiency of a pile group is thus defined as the ratio of actual group capacity to the sum of the individual pile capacities.

The Converse-Labarre equation has been widely used to compute E_g:

$$E_g = 1 - \theta \frac{(n-1)\,m + (m-1)\,n}{90.\ m.n.}$$

in which the symbols are defined as indicated in Figure VI - 5.3.

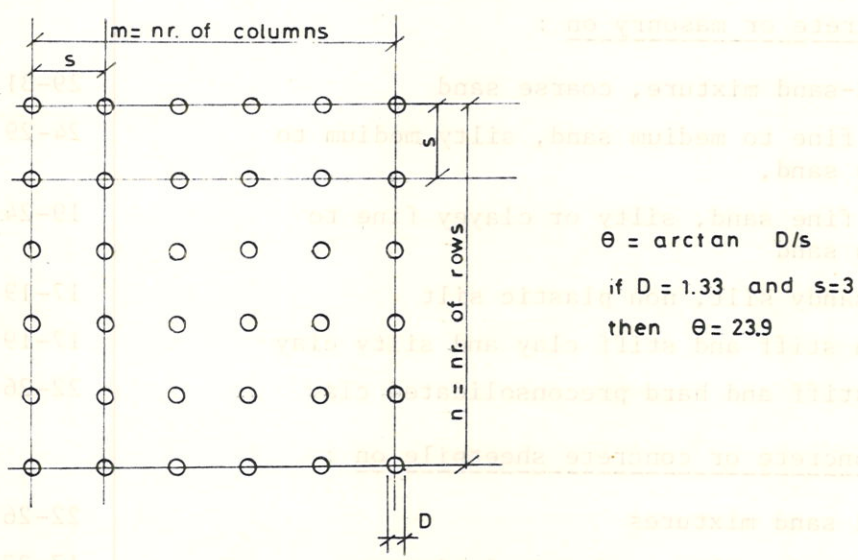

Figure VI - 5.3 Pile group

The equation is only based on comparing the sum of skin resistances of all piles with the skin resistance of the earth block designated by the circumference $2 [(n-1) s + (m-1) s]$ of the pile group.

In case of the foundation slab, which connects all the piles, is cast directly on the soil surface, as is mostly the case, the group capacity is the block capacity based on perimeter shear and bearing capacity of the block at the pile points.

It should be checked whether the block perimeter shear exceeds the pile group efficiency shear.

Block perimeter shear = $L \times [(n-1) s + (m-1) s] \times 2 \times c$

in which : L = hight of block (= pile length)

n,m,s = see Figure VI - 5.3

c = cohesion of soil

= 0.5 x unconfined compression stength

Pile group efficiency shear = $E_g \times m \times n \times P_s$

in which : E_g = pile group efficiency

m,x,n = number of piles

P_s = skin resistance for each individual pile.

The smallest of the two should be used for design purposes and the bearing capacity of the block-area at depth L should be added to arrive at the total group bearing capacity.

5.3 Design of pile foundations.

5.3.1 General.

Pile systems as a rule are designed assuming that a pile can only transmit an axial load. Thus, it is assumed that the pile ends are hinges and lateral support of the soil is neglected.

If, for a 2 dimensional problem (see Figure VI - 5.4) the loads I, II, and III which result from force R are far greater than can be carried by the corresponding piles (pile rows) the lines I, II and III have to be considered as centre lines for 3 pilegroups. The piles of each group can be placed symmetrically round about these lines.

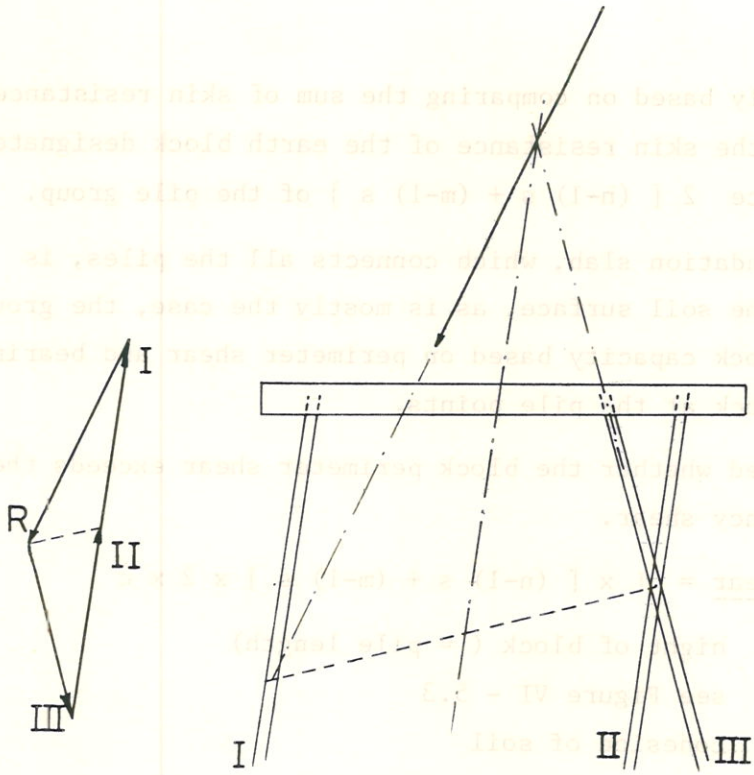

Figure VI - 5.4

But the resultant of the forces of the piles of one group only coincides with the group's centre if all piles of this group are equally loaded. To fulfil this condition the movement of the superstructure should be a parallel one. Generally this is not so. The error which is introduced by assuming parallel displacement may however be neglected if the distances between the extreme piles "a" of each group are small in proportion to the distances "b" between one centre line and the point of intersection with the 2 others (see Figure VI - 5.5).

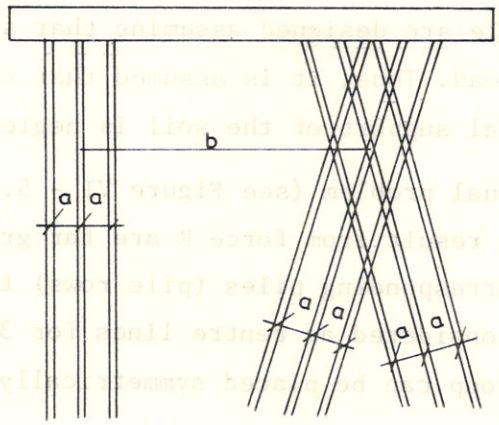

Figure VI - 5.5

For preliminary designs this method will give sufficient results, for final design a control computation has to be made.

5.3.2 Control computation by means of the elastic centre of a pile system

The elastic centre of a pile system is defined as follows : Every external force, acting at the rigid foundation block, supported by a pile system, intersecting the elastic centre, gives this block a rotation - free (parallel) displacement. A moment, acting on the block, will give it a rotation about this point.

The determination of the elastic centre can be done graphically in the following way (see Figure VI - 5.6).

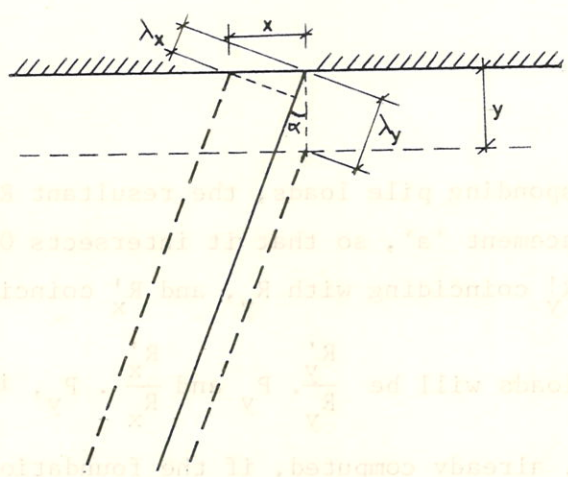

Figure VI - 5.6

a: Give the superstructure a vertical displacement = y. If the inclination of a pile is α , the displacement λ_y of the head of the pile in the direction of the pile axis will be $\lambda_y = y.\cos\alpha$, and since the displacement is proportional to force P_y it follows:

$$\lambda_y = c.P_y \text{ and } P_y = \frac{y.\cos\alpha}{c}$$

So the load of every pile can be determined and with a force diagram and link polygon, the resultant force R_y of the pile loads can be found in magnitude, direction and position.

b: Give the superstructure a horizontal displacement = x, then

$$\lambda_x = x.\sin\alpha \text{ and } P_x = \frac{x.\sin\alpha}{c}$$

Again the resultant force R_x of all pile loads can be determined with a force diagram and a link polygon.

The point of intersection of R_y and R_x is the elastic centre of the pile system.

Generally the resultant force R' acting on the pile system will not intersect the elastic centre 0 (see Figure VI - 5.7).

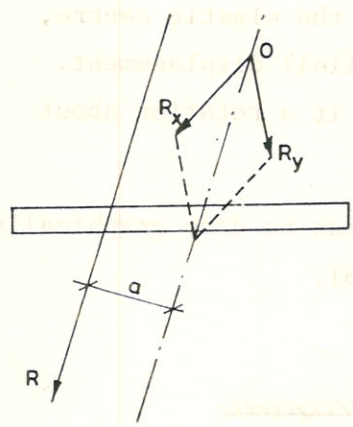

Figure VI - 5.7

To calculate the corresponding pile loads, the resultant R' is given a parallel displacement 'a', so that it intersects 0. Resolve R' into 2 components, R'_y coinciding with R_y, and R'_x coinciding with R_x.

The corresponding pileloads will be $\frac{R'_y}{R_y} . P_y$ and $\frac{R'_x}{R_x} . P_y$, in which P_x and P_y are the loads, already computed, if the foundation undergoes a vertical displacement y, and a horizontal displacement x respectively.

By giving R' a parallel displacement 'a', a moment M = R'.a has been introduced. This moment M gives the foundation block a rotation on 0. If the rotation is φ, the corresponding pile loads can easily be expressed in φ and r (Figure VI - 5.8)

$$\lambda_t = r . \varphi . \sin\beta$$

since $r . \sin\beta = a \rightarrow \lambda_t = a . \varphi$; $P_\varphi = \frac{a - \varphi}{c}$ and the moment of

P_φ about $0 = P_\varphi . a = \frac{a^2 . \varphi}{c}$

Conditions of equilibrium : $\Sigma P . a = \frac{\Sigma a^2 . \varphi}{c} = \varphi . \Sigma \frac{a^2}{c} = M.$

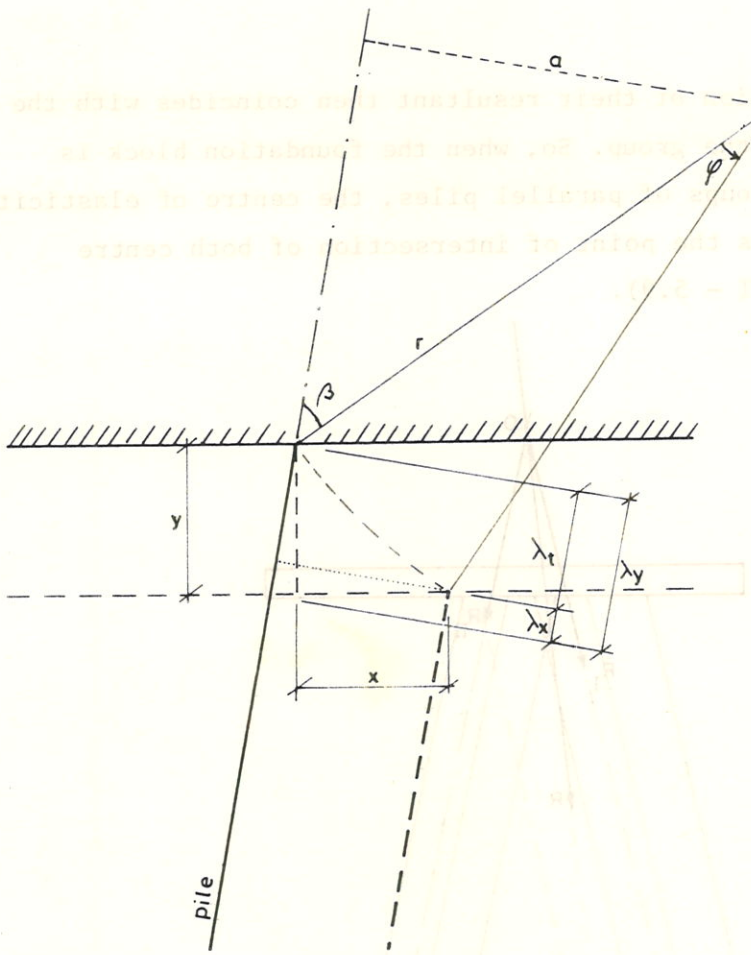

Figure VI - 5.8

Thus, the pile load, due to the moment M, can be computed. The resulting pile loads, caused by a resultant force R' are found by adding up the 3 forces.

$$P_{total} = P'_x + P'_y + P_\varphi$$

ANNEX VI - 3 gives an example of the computation of a given pile system of 4 piles, loaded by a force R'.

5.4 Pile systems

It is obvious that a pile system should be as simple as possible; often it is possible to limit the number of pile directions to two; then the pile loads can be computed very easily.

Parallel piles, which have the same dimensions, will be equally loaded if the superstructure undergoes a parallel displacement.

The line of action of their resultant then coincides with the centre line of the group. So, when the foundation block is carried by 2 groups of parallel piles, the centre of elasticity will be found as the point of intersection of both centre lines (Figure VI - 5.9).

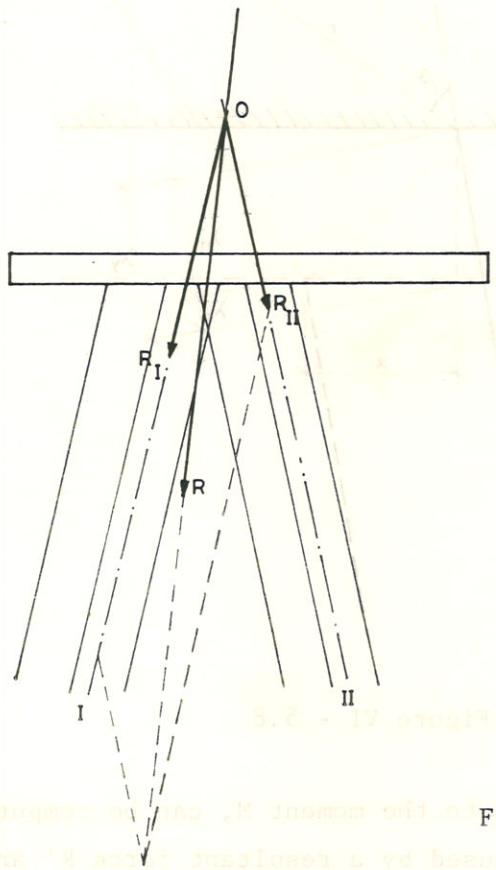

Figure VI - 5.9

So, if R is the resultant force acting on the foundation block, the pile system can be designed as follows :

Draw two lines, I and II, parallel to the intended inclination of the pile groups, whose point of intersection lies on R. Resolve R in the directions I, and II. Determine the number of piles of each direction and group them symmetrically with respect to I and II.

Every point of R can be chosen as point of intersection : it will be chosen so that a logical disposal of the piles under the structure is obtained.

Often R is not constant in direction, magnitude or position, owing to variations in water level, alterations of the loads, etc. (see

Figure VI - 5.10). Then, all resultants R have to be determined.

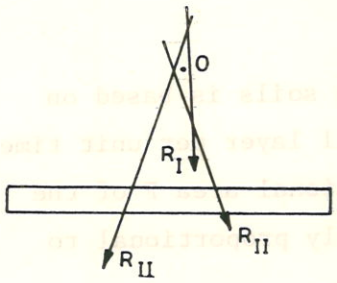

Figure VI - 5.10

Generally the points of intersection of these resultants will cover a limited area. Now the elastic centre must be chosen so that it is in this area and the pile loads have to be determined for each resultant separately. Each resultant R has to be displaced to the elastic centre, whereby a moment M is introduced. But because the distance of displacement is very short, this moment will be small.

Chapter 6. Seepage.

6.1 General.

The theory on the seepage of water through soils is based on Darcy's law. The discharge Q through a soil layer per unit time is directly proportional to the cross-sectional area F of the layer and the hydraulic head h and inversely proportional to the length of the flow-path:

$$Q = k.\ F.\ \frac{h}{l}$$

wherein k is the coefficient of permeability which dependents on the nature of the soil, the viscosity and the unit weight of the liquid and the temperature. It can vary considerably for different soils.

The discharge velocity v is defined as :

$$v = \frac{Q}{F} = k.\ \frac{h}{l}$$

The actual velocity of the water in the voids, however, is much greater because only a part of a cross-section is used for the flow of water, the rest, e.g. 60%, if the porosity is 40%, is occupied by grains. Hence the average velocity of the water is equal to the discharge velocity divided by the porosity :

$$v_s = \frac{v}{0,4}$$

The symbol v_s stands for seepage velocity.

The discharge velocity is generally used in computations. If, however, the coefficient k has to be determined in situ, for instance by injecting salt in the ground water and then measuring the time which elapses till the salt concentration in a point downstream reaches a maximum, then the seepage velocity v_s is determined.

The term $\frac{h}{l}$ is called the hydraulic gradient.

If the hydraulic gradient becomes great, Darcy's law does not hold any more, the discharge velocity is not any longer proportional to the hydraulic gradient. For coarse sands the boundary is lower than for fine soils.

Table VI - 6.1 gives an impression of some values of k.

Table VI - 6.1 Coefficient of permeability.

material	Permeability (m/s)
Gravel	$1.0 - 10^{-2}$
River sand	$10^{-2} - 10^{-3}$
Fine sand	10^{-4}
Sandy silt	$10^{-4} - 10^{-6}$
Sandy clay	$10^{-6} - 10^{-7}$
Silty clay	$10^{-8} - 10^{-9}$
Peat	$10^{-7} - 10^{-9}$
Clay	$10^{-9} - 10^{-12}$

6.2 Seepage flow and uplift pressure under a water retaining structure.

The flow pattern of a seepage flow can be sketched as is indicated in Figure VI - 6.1. The flow pattern consists of a grid of flow lines, along which the flow is progressing and equipotential lines, along which the piezometric head is constant.

In a flow pattern, the flow lines and equipotential lines are perpendicular to each other.

The lines p in Figure VI - 6.1 represent a number of equipotential lines at distances Δs, chosen in such a way, that the potential drop between two adjacent equipotential lines is constant.

Perpendicular to these lines a number of flow lines is drawn, at distance Δn, in such a way that the discharge between each two lines per unit time and per unit width is constant = Δq. The strip between two flow lines is called a flow channel, the parts of the flow channel between two adjacent equipotential lines are

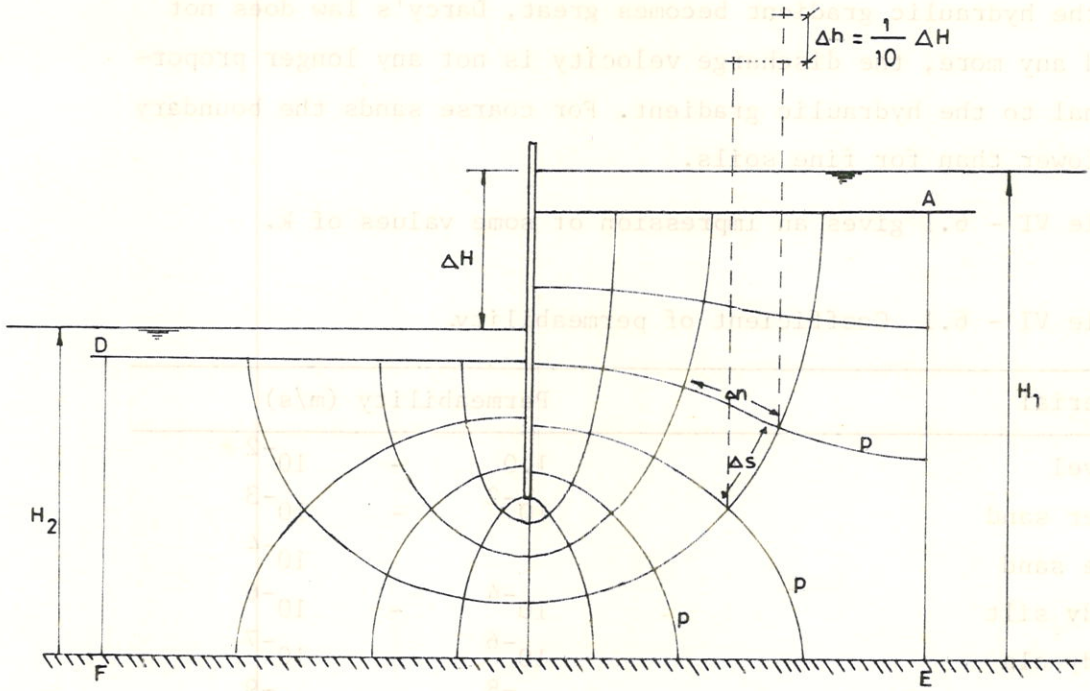

Figure VI - 6.1

called fields. The smaller Δq and Δh, the more the fields approach rectangles.

Darcy's law : $q = k.\ F.\ \frac{h}{l}$ becomes :

$$\Delta q = k.\ \Delta n.\frac{\Delta h}{\Delta s} \text{ and } \frac{\Delta s}{\Delta n} = \frac{\Delta h}{\Delta q}$$

If, in drawing the system of flow lines, the ratio $\Delta s/\Delta n$ is chosen constant, then $\Delta h/\Delta q$ will be constant as well. This means that with a constant q, the head difference over a square will be constant too.

The system of flow lines, and equipotential lines is in that case called a <u>flow net</u>.

In Figure VI - 6.1 the flow pattern should have been extended beyond the lines AE and DF, but the flow lines would become very long and the hydraulic gradient and thus the velocity of flow would be very small compared with the hydraulic gradient and the

velocity along flow lines near the sheet piling. The fault which is made by neglecting the seepage outside the area AEFD may be neglected. The line AEFD is then a boundary flow line. Now the hydraulic boundary conditions are known and the flow net can be constructed, by trial and error, until the pattern obtained looks satisfactory. If this net consists of n squares measured along a flow line, the hydraulic head between two adjacent equipotential lines is :

$$\Delta h = \frac{H_1 - H_2}{n}$$

In each arbitrary point the piezometric level, the direction of flow and also, if the value of k is known, the velocity of the seepage may be determined. The discharge in each flow channel per unit time is :

$$q = k . \Delta h \quad , \quad \left(\frac{\Delta n}{\Delta s} \text{ being } 1 \right)$$

The total discharge per unit time :

$$Q = m \times q$$

in which m is the number of squares measured along an equipotential line.

Although the leakage under the construction determined according to the above method gives a good insight in the pressure distribution under the construction, is does not give any details as to whether the leakage will cause any danger due to wash-out of soils. Moreover, the method is a two-dimensional one and any seepage along the sides of a structure are not considered.

A practical way to check whether a certain construction is safe with respect to uplift pressure and seepage-flow both under and along the sides of a structure is the empirical method of Lane.

The Lane - method is based on the following :

- The weighted creep distance is the sum of the vertical creep distances plus one - third of the horizontal creep distances.
- The weighted creep-head ratio is the weighted creep distance

or, the length of the percolation path, divided by the effective head. Lane's recommendations for the weighted-creep ratio are for fine sand or silt 8.5.

- The upward pressure can be estimated by assuming that the reduction in water head between upstream and downstream head is proportional to the weighted creep distance.

The weighted creep distance or percolation path L is defined as follows :

for flow passing under a construction : $L_u = V_v + \frac{h}{3} + 2.\ S$

for flow passing along the sides : $L_s = 0.75 \times V_h + 2.S$

in which V_v = vertical path along vertical surface

h = horizontal path along horizontal surface

S = path through earth or embankment

V_h = horizontal path along vertical surface

For Figure VI - 6.2 the following calculation has been made :

$$V_v = 3.1 + 4 + (5 \times 0.3) + 2 + 2.3 = 12.9 \text{ m}$$

$$h = 20.7 \text{ m}$$

$$L_a = 12.9 + \frac{20.7}{3} = 19.8 \text{ m}$$

head difference $H = 2$ m

creep ratio $= \frac{19.8}{2} = 9.9$

Minimum for silt is 8.5, i.e. with the same percolation path, the maximum head difference could have been 19.8 : 8.5 = 2.30 m.

The uplift pressure under the construction can now be determined as indicated in Figure VI - 6.2.

6.3 Seepage through a dam or embankment

If we assume the dam consists of pervious sand, which rests on an impermeable base, the water will seep through the dam and will flow out of the downstream slope. Let the water level at the upstream

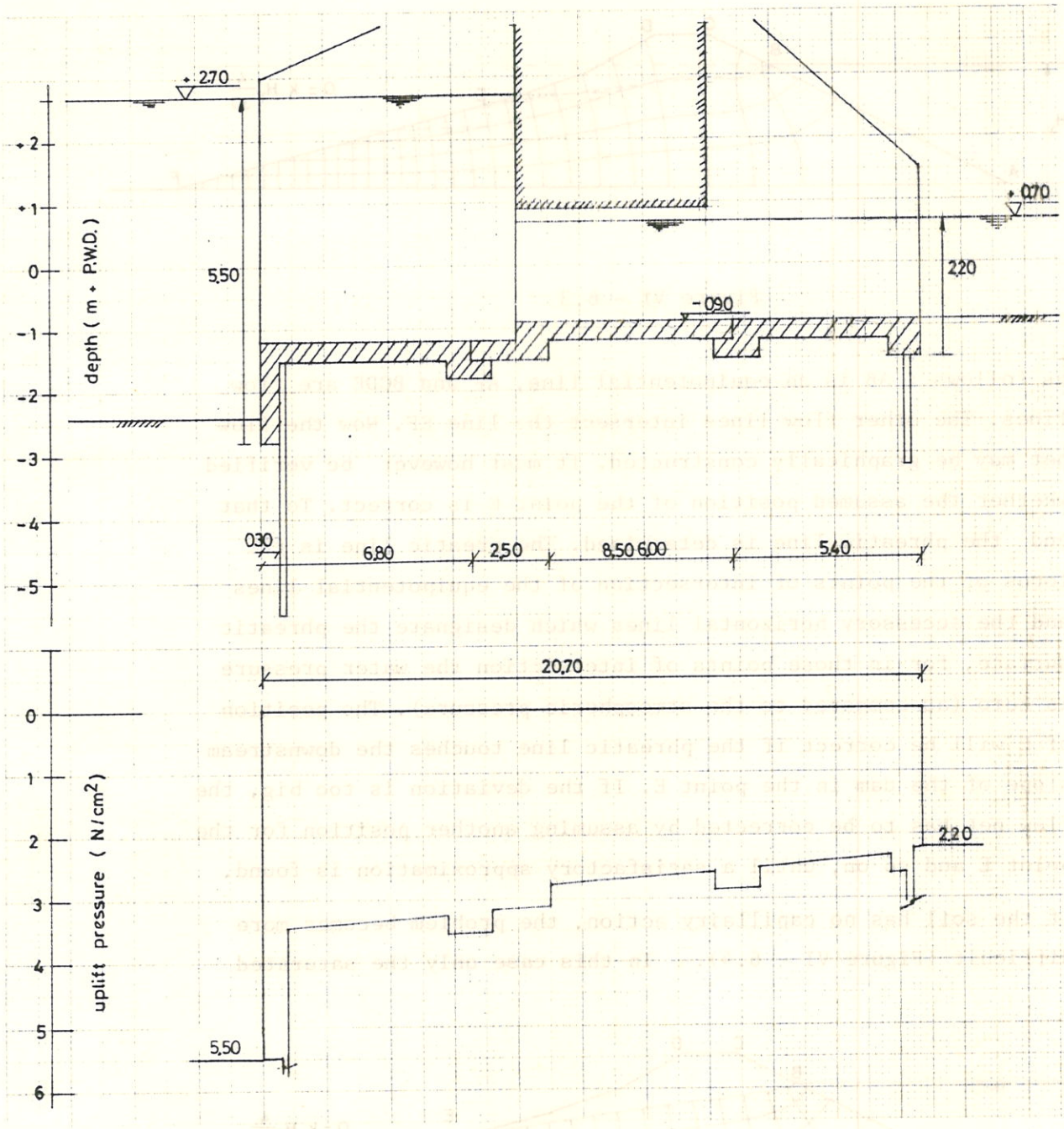

Figure VI - 6.2

side be H_1, while at the downstream side the seepage water is immediately carried off (Figure VI - 6.3).

The capillairy rise of the water in the dam is assumed to be very great, so the dam is completely saturated.

We assume the water flows out of the lower part EF of the downstream side of the dike. The hydraulic boundary conditions are

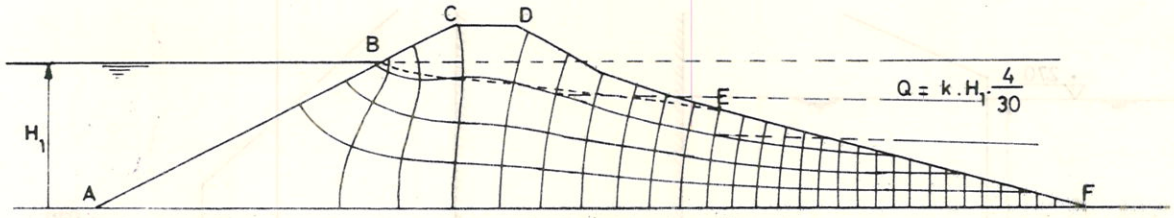

Figure VI - 6.3

as follows : AB is an equipotential line, AF and BCDE are flow lines. The other flow lines intersect the line EF. Now the flow net may be graphically constructed. It must however be verified whether the assumed position of the point E is correct. To that end the phreatic line is determined. The preatic line is the locus of the points of intersection of the equipotential lines and the accessory horizontal lines which designate the phreatic surface, for in those points of intersection the water pressure is zero (as compared to the atmospheric pressure). The position of E will be correct if the phreatic line touches the downstream slope of the dam in the point E. If the deviation is too big, the flow net has to be corrected by assuming another position for the point E and so on, until a satisfactory approximation is found.

If the soil has no capillairy action, the problem becomes more difficult (Figure VI - 6.4). In this case only the saturated

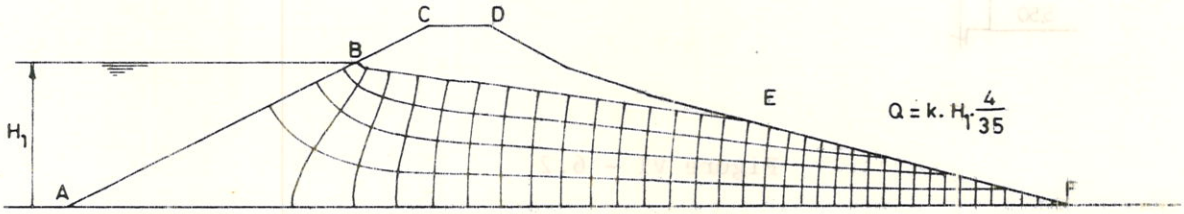

Figure VI - 6.4

lower part of the dam will take part in the seepage. The flow net is constructed by assuming an arbitrary but reasonable phreatic line BE. Except for the part of the phreatic line near B, this line will have a slightly convex upward curved shape because to

the right the cross-section of the zone of seepage decreases, the velocity of the water and thus the hydraulic gradient must increase. With the hydraulic boundary conditions known, the flow net can be drawn. The position of the assumed phreatic line will be correct if the points of intersection of the equipotential lines with the phreatic line have a constant difference in height. The differences have to be equal to the potential drop Δh.

Figure VI - 6.5 gives the flow pattern if at the downstream side the water has risen to a height H_2. In this case the line GF is an equipotential line, so the flow must intersect the inner slope GF at right angles.

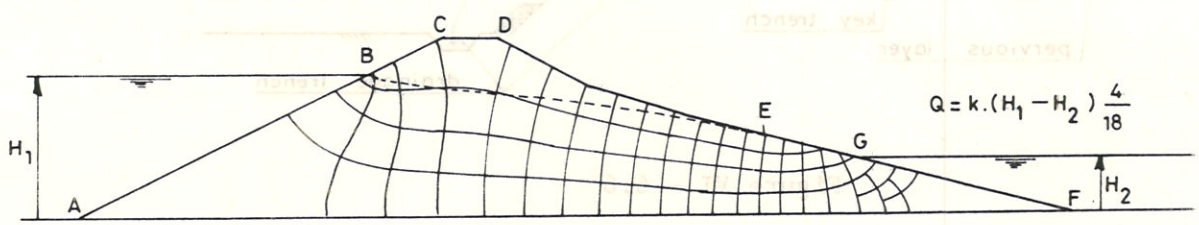

Figure VI - 6.5

6.4 Drainage of excavations.

6.4.1 Open drainage.

In general, building pits have to be drained from groundwater that is seeping in through the slopes and the floor. If the removal of this water is done via pumping from trenches in which the water is caught, the drainage system is called open. Drainage by filter wells is applied for deep excavations with the purpose to lower the groundwater head around the pit and thus reducing or stopping the seepage.

For an open drainage, the building pit has to be protected against flooding by a ring bund upto a height of the highest water to be expected during the lifetime of the open drainage. The berm between the toe of this bund and the shoulder of the excavation should be sufficiently wide to locate a drainage trench or ditch.

If a pervious layer exists at limited depth below ground level a cutoff wall or clay trench can solve a lot of problems. The slope of the building pit shall also be not too steep and the bottom width of the building pit sufficient wide to accomodate the sluice to be constructed with an additional width for a drainage trench and working space (see Figure VI - 6.6).

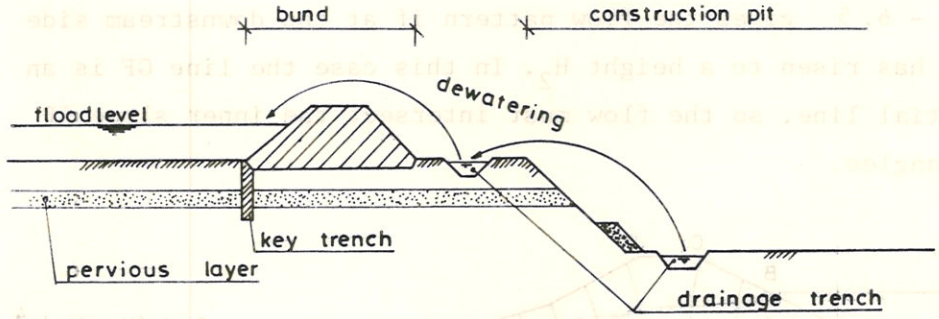

Figure VI - 6.6

Slopes of the building pit should be checked with respect to their stability against sliding. If after excavation still serious seepage is taking place so that the slope of the excavation is damaged, a filterlayer could be constructed against the toe to protect the slope against "boiling".

The excavation has to be made in layers of 0,3 - 0,5 m depth each starting with a drainage trench. Before excavating the next layer, the drainage trench has to be deepened and pumped as dry as possible.

If during the excavation of the building pit uncontrollable "boiling" effects occur additional drainage by sinking filter wells has to be applied.

6.4.2 Filter well drainage.

With a drainage by filter wells, excavations can be carried out under far more favourable circumstances than with an open drain. By placing a number of filter wells along the perimeter of the building pit it is possible to lower the surrounding phreatic level below the bottom and far within the slopes. Seepage forces

do not occur and the slopes can be made steeper. The soil is first excavated to ground water level. In this position wells are installed along the slope at regular distances. These wells are connected by a conduit leading to the pump. Due to the limited suction head of the pump, a lowering of the ground water table of max. 5 m, can be affected. Then the digging can be continued down to that depth. If excavations must go deeper, then a second drainage system is placed 5 m below the first, on a berm in the excavation's slope.

In Figure VI - 6.7 the phreatic level in a cross-section through the wells (I-I), and through a cross-section between 2 wells (II-II) is demonstrated.

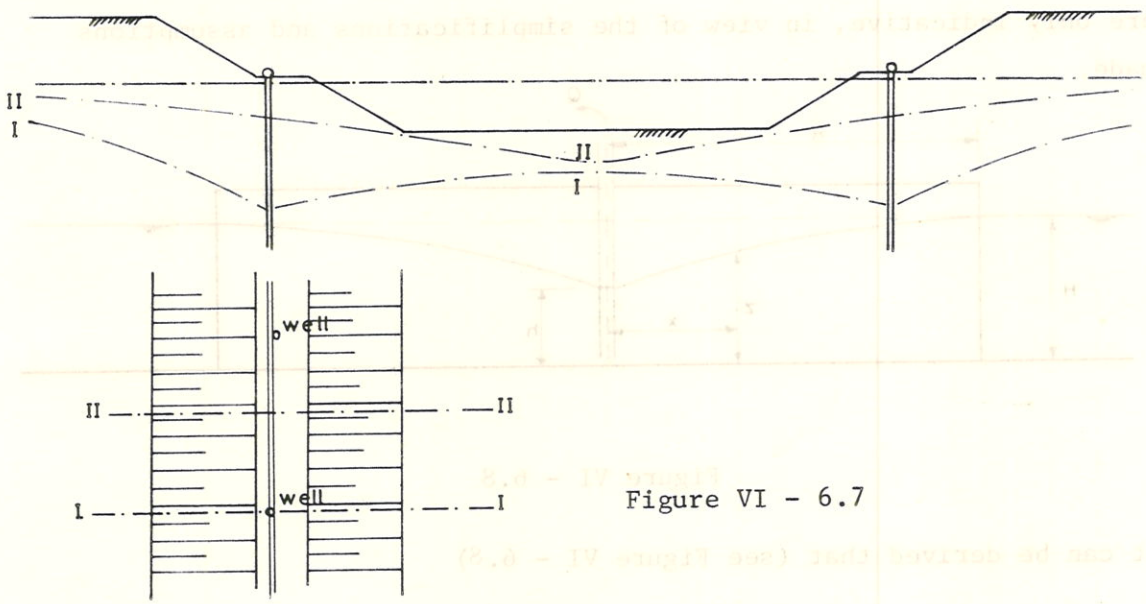

Figure VI - 6.7

6.4.3 Operation and application of filter well drainage

The operation of a filter well system is practically restricted to soils will a permeability between $k = 1 \times 10^{-4}$ m/s to $k = 1 \times 10^{-2}$ m/s. If $k < 1 \times 10^{-4}$ m/s the method is often not effective because the lowering of the ground-water table is only felt upto a short distance from the well point. In such cases drainage in the open is more effective.

A filter well itself is made by driving a borehole tube into the ground up to the required depth of the well. In this bore hole tube a so-called well point is placed. Then the borehole tube is removed while filtermaterial is dumped around the well point. In

all well points a suction pipe is lowered and all suction pipes are interconnected to a headerpipe which leads to the pump.

The well point is a steel, perforated pipe surrounded by a mesh-wire filter screen. The filter material consists of coarse sand which will prevent the soil to wash into the pipe. In this way silting up of the well is avoided.

In view of pressure losses in the pipe-system and to prevent cavitation, the maximum lowering of the watertable at the well point is 3 to 5 m.

The amount of water which has to be pumped out can be calculated with formulas which are based on Darcy's law. However, the results are only indicative, in view of the simplifications and assumptions made.

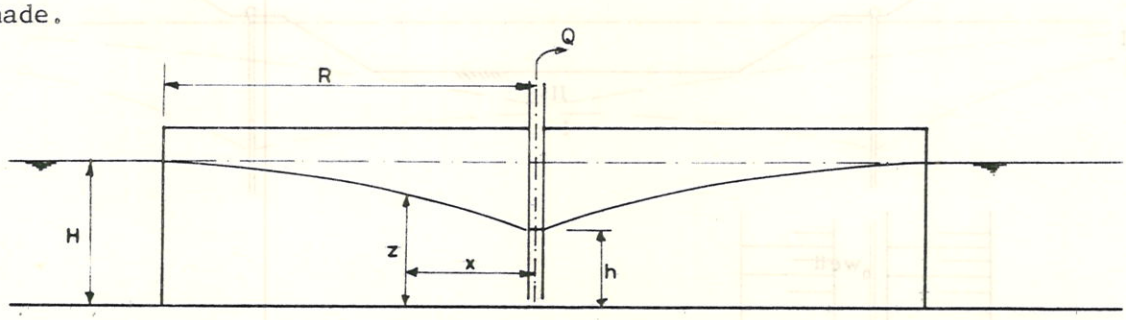

Figure VI - 6.8

It can be derived that (see Figure VI - 6.8)

$$H^2 - z^2 = \frac{Q}{\pi \cdot k} \cdot \ln \frac{R}{x}$$

R can be estimated for small drainages as :

$$R = 3000\ (H - h) \cdot \sqrt{k}$$

in which: R = distance over which lowering of groundwater table is noticable (in meter).

In deriving the formula it is assumed that the impervious layer will be at the same level as the bottom of the well. Thus it is assumed that no water will flow to from beneath this level. In fact this will not be true and therefore the calculated Q has

to be increased by 20% to balance this simplification.

For important drainages k, R and H are mostly determined with the aid of a trial drainage.

To calculate the permeability k from a trial drainage, it is better to do the measurements of the groundwater table at some distance from the well to avoid disturbances and deviations from the formula which are greatest close to the well.

The formula is then : $(z_1)^2 - (z_2)^2 = \frac{Q}{\pi k} \cdot [\ln (x_1) - \ln (x_2)]$

Lowering of the water table with a consequent increase of the effective granular stresses will lead to settlements in compressible soils. These settlements can affect nearby buildings. Pile foundations can be exposed to negative skin friction. Sometimes it is possible to feed back the pumped groundwater at a suitable place, thus reducing any negative effects of the drainage.

ANNEX VI-1 COMPARISON BETWEEN RANKINE, COULOMB AND EQUIVALENT FLUID PRESSURE METHODS

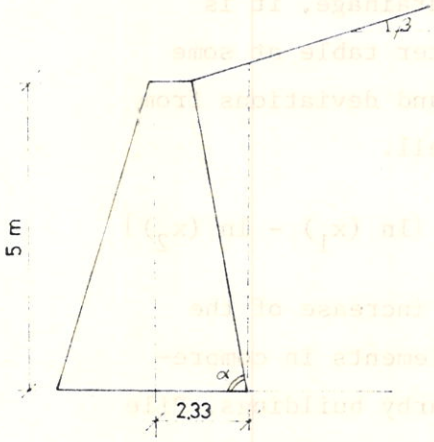

Soil

fine silty sand,

permanently above groundwater table.

$\beta = 18.4°$ (1:3)

$\alpha = 65°$

$\gamma = 19.1$ KN/m³

$\varphi = 30°$

$\delta = 2/3\ \varphi = 20°$

I : Coulomb's condition $\beta \leqslant \delta \leqslant \varphi$ is met:

$18.4 \leqslant 20 \leqslant 30$

according to Coulomb:

$$k_a = 0.79$$

$$P_a = \tfrac{1}{2} \cdot \gamma . k_a . H^2$$

$$= \tfrac{1}{2} \times 19.1 \times 0.79 \times 5^2$$

$$= 188.5 \text{ KN/m'}$$

$$P_h = P_a . \cos(\alpha - \delta) = 133.3 \text{ KN/m'}$$

$$P_v = P_a . \sin(\alpha - \delta) = 133.3 \text{ KN/m'}$$

angle with horizontal:

$$\lambda = \delta + (90 - \alpha) = 45°$$

$$\eta = \lambda + \alpha - 90 = 20°$$

Coulomb condition is herewith satisfied. $(\eta \geqslant \delta)$

II: Rankine :

$$k_a = 0.398$$

$$P_a = \tfrac{1}{2} \cdot \gamma . k_a . H^2 = \tfrac{1}{2} \times 19.1 \times 0.398 \times (5.77)^2$$

$$= 126.8 \text{ KM/m'}$$

Forces acting on vertical plane through the heel of the wall:

$$P_h = P_a . \cos\beta = 120.3 \text{ KN/m'}$$

$$P_v = P_a . \sin\beta = 40.0 \text{ KN/m'}$$

Weight of the soil wedge:

$$W = \left(\frac{2.33 \times 5}{2} + 0.903\right) \times 19.1 = 128.5 \text{ KN/m'}$$

Resultant on wall :

$$P_v = 40.0 + 128.5 = 168.5 \text{ KN/m'}$$

$$P_a = \sqrt{P_v^2 + P_h^2} = 207.0 \text{ KN/m'}$$

This force should be compared with the P_a determined by Coulomb's method.

However, Rankine's conditions are not met since :

- Angle of resultant force P_a with the horizontal is :

$$\tan \lambda = \frac{R_v}{R_h} = \frac{168.5}{120.3} = 1.6899 \longrightarrow \lambda = 54.5°$$

$$\eta = 29.5°$$

$\eta > \delta$, Rankine does not prevail.

III: Equivalent pressure method

The backfill material is fine silty sand and comes under type 3 - soil. From Figure VI - 2.4 it follows that :

$K_h = 7.87 \text{ KN/m}^2$, $P_h = 131.2 \text{ KN/m'}$

$K_v = 2.39 \text{ KN/m}^2$, $P_v = 40.0 \text{ KN/m'}$

Following the above procedure under Rankine :

$$\Sigma P_v = 168.5 \text{ KN/m'}$$

$$P_a = \sqrt{P_v^2 + P_h^2} = 213.6 \text{ KN/m}^1$$

$$\tan \lambda = \frac{16.85}{131.2} = 1.2843 \longrightarrow \lambda = 52.1° , \eta = 27.1°$$

IV. SUMMARY

Method	P_h(KN/m')	P_v	P_a	λ
Coulomb	133.3	133.3	188.5	45°
Rankine	120.3	168.5	207.0	54.5°
Eq. Fl. Pr.	132.1	68.5	213.6	52.1°

Although Coulomb's method yields the lowest resultant force, the over-turning force P_h is the highest and the stabilizing force P_v is the smallest, thus giving a more critical conditions than the Equivalent Fluid Pressure method.

If comparing Rankine's method with the Equivalent Fluid Pressure method, it could be shown that the two methods would give almost the same result, if φ were 28° instead of 30°. If field tests had indicated that φ = 22° and the Equivalent Fluid Pressure method had been used, the design would have been in error on the danger side.

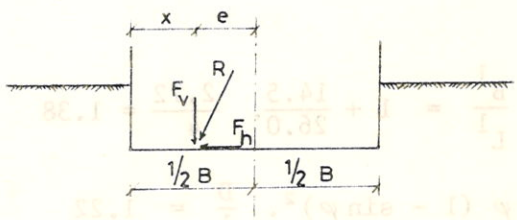

F_v = 78000 N = 78 KN

F_h = 34 KN

M = 106 KNm

B = 4 m

Eccentricity of resulting :

$$x = \frac{M}{F_v} = \frac{106}{78} = 1.36 \text{ m}$$

$$e = \tfrac{1}{2} B - x = 2.00 - 1.36 = 0.64 \text{ m}$$

Foundation reaction is :

$$q_1 = \frac{Fv}{B} = \frac{78}{4} = 19.5 \text{ KN/m}^1$$

$$M = 78 \times 0.64 = 49.92 \text{ KN/m}$$

$$= 2 \left(\frac{q_2 \times \tfrac{1}{2}B}{2} \times 2/3 \times \tfrac{1}{2} B \right)$$

$$q_2 = 18.72 \text{ KN/m}^1$$

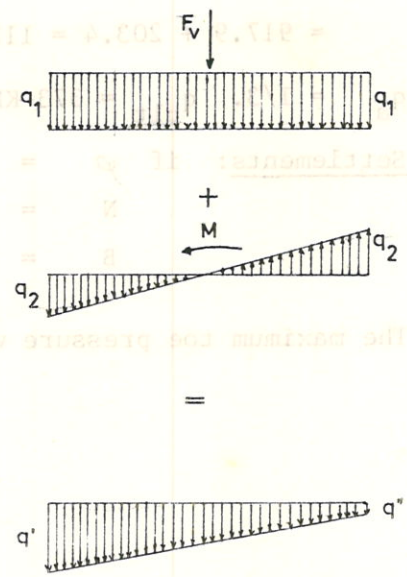

$q' = q_1 + q_2$ = 38.22 KN/m'

$q'' = q_1 - q_2$ = 0.78 KN/m'

effective base width:

$$B^1 = B - 2.e = 4 - (2 \times 0.64) = 2.72 \text{ m}$$

The ultimate bearing capacity can then be calculated:

$$q_{ult} = c.\ N_c.\ s_c.\ d_c + \bar{q}.\ N_q.\ s_q.\ d_q + \tfrac{1}{2} \gamma.\ B'.N_\gamma\ .s_\gamma$$

let us assume that c = 0

$$\bar{q} = D \times \gamma = 2 \times 18.8 \text{ KN/m}^2$$

$\varphi = 28°$: $N_q = 14.5$

$$s_q = 1 + \frac{N_q}{N_c} \cdot \frac{B^1}{L^1} = 1 + \frac{14.5}{26.0} \cdot \frac{2.72}{4} = 1.38$$

$$d_q = 1 + 2 \tan\varphi \, (1 - \sin\varphi)^2 \cdot \frac{D}{B^1} = 1.22$$

$$N_\gamma = 10.9$$

$$s_\gamma = 1 - 0.4 \frac{B^1}{L^1} = 1 - 0.4 \frac{2.72}{4} = 0.73$$

q_{ult} = (2 x 18.8 x 14.5 x 1.38 x 1.22) + (½ x 18.8 x 2.72 x 10.9 x 0.73)

= 917.9 + 203.4 = 1121 KN/m²

q_a = 1/3. q_{ult} = 373 KN/m²

<u>Settlements</u>: if φ = 28°

N = 10 q_a = 3 ksf = 143 KN/m²

B = 4 m

The maximum toe pressure was calculated to be 38.2 KM/m².

---

1 ksf = 1 Kip/sq. ft. = 47.9 KM/m²

γ_w = 62.6 lbs./cuft. = 9,807 KN/m²

γ_{soil} = 90 - 130 lbs/cuft. = 14 - 21 KN/m³

N.B. The sketched pile system is not necessarily the most suitable for the given external load.

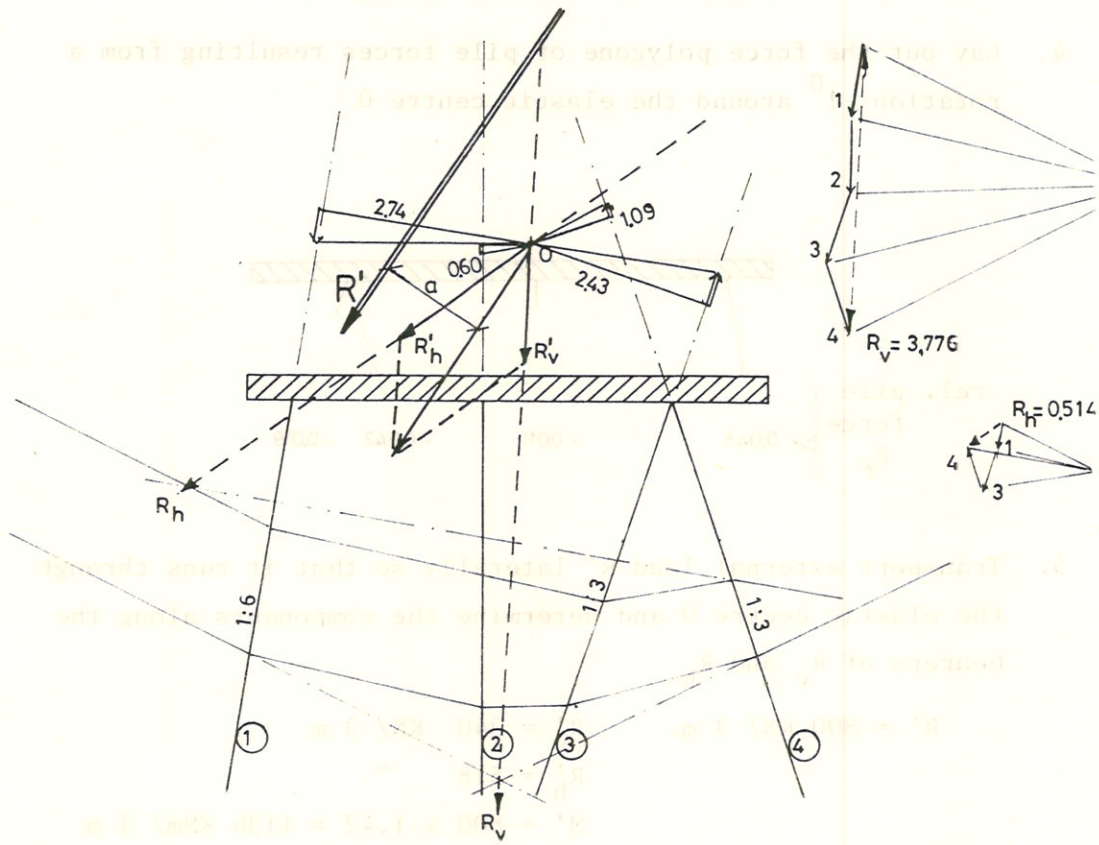

1. Determine relative pile forces
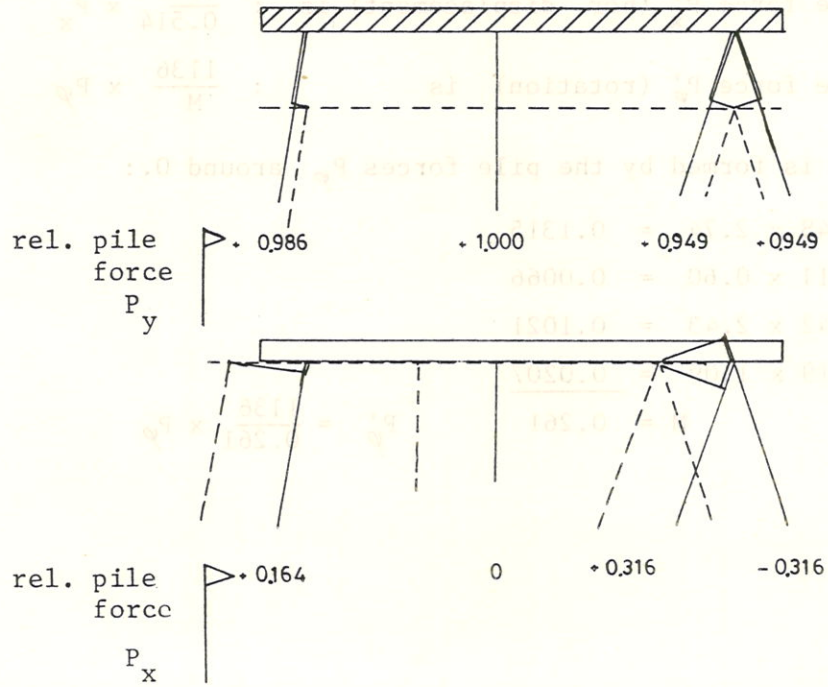
assume vertical displacement of 1 cm and pile elasticity c = 1.