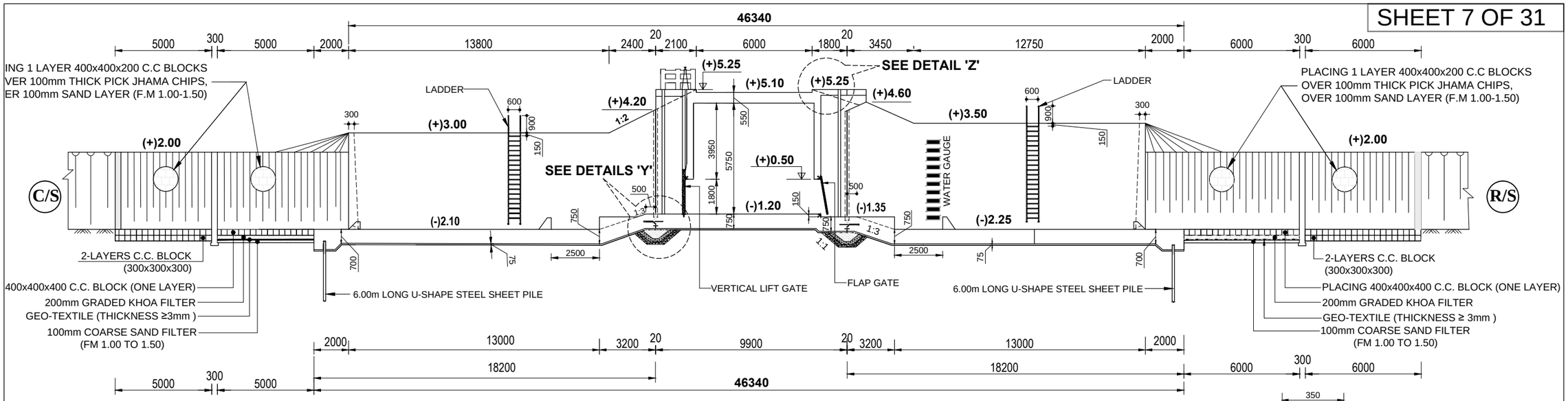

SECTIONAL ELEVATION (SECTION A-A)

(SAND PILE AND SAND FILLING UNDER BARREL, APRONS & RETURN WALL ARE SHOWN IN SHEET NO 26, 27 & 28 OF 31)

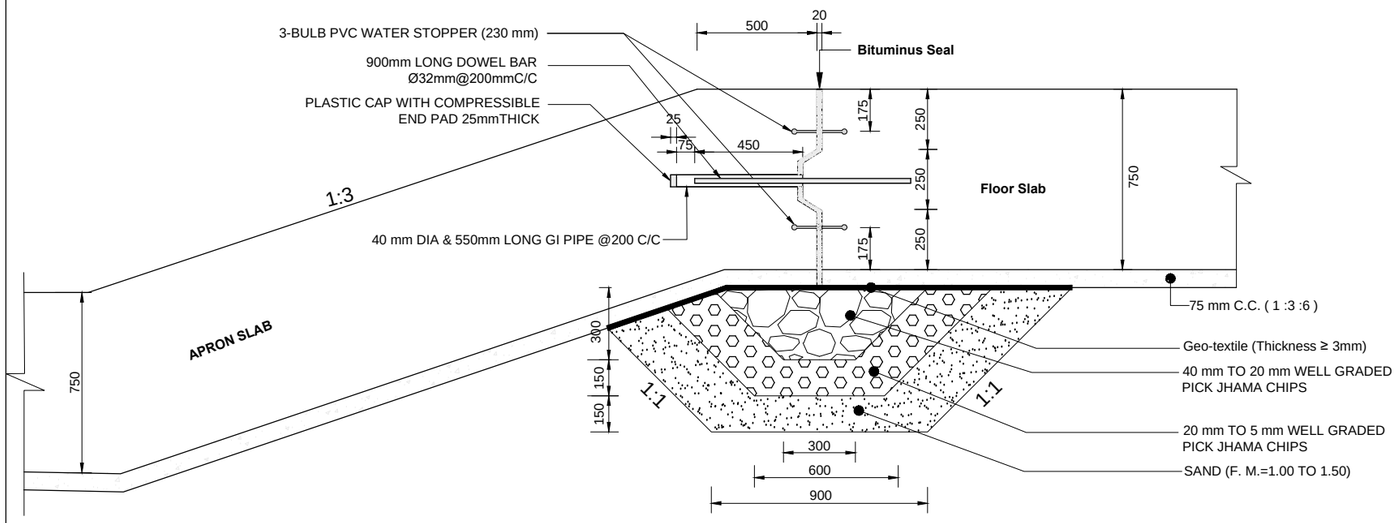

DETAILS "Y" [Reinforcement not shown]

(SEE SECTION A-A)

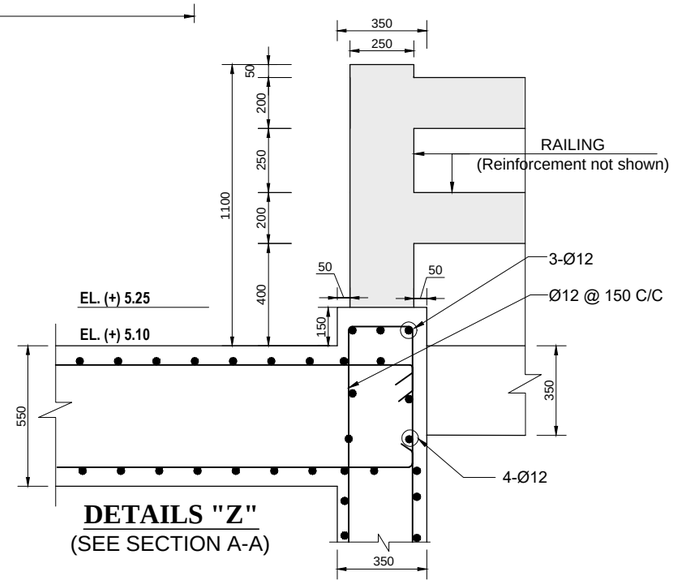

DETAILS "Z"

(SEE SECTION A-A)

GOVERNMENT OF THE PEOPLE'S REPUBLIC OF BANGLADESH						
MINISTRY OF WATER RESOURCES						
BANGLADESH WATER DEVELOPMENT BOARD						
COASTAL EMBANKMENT IMPROVEMENT PROJECT, PHASE-1 (CEIP-1)						
DETAILED DESIGN OF DRAINAGE REGULATOR DR-5, AT Km 18.950 (1V-1.50m X 1.80m) UNDER POLDER -16, PACKAGE - 3, CEIP - 1, BWDB, UPAZILA - PAIKGACHA, DISTRICT - KHULNA.						
BANGLADESH WATER DEVELOPMENT BOARD				SECTIONAL ELEVATION & DETAIL		
DESIGN CIRCLE -8			APPROVED BY	CONSULTANT : Royal HaskoningDHV Sub Consultants DEVCON, DPM, IWM & DHI		
CHECKED BY	REVIEWED BY	RECOMMENDED BY		DESIGNED & CHECKED BY	REVIEWED BY	RECOMMENDED BY
ZAYED BIN SAIF ASSISTANT ENGINEER	ZAKARIA PERVEZ EXECUTIVE ENGINEER	MOHAMMAD SAIF UDDIN SUPERINTENDING ENGINEER	MD. ENAYET ULLAH CHIEF ENGINEER, DESIGN	MD. MAHBUBUR RAHMAN DESIGN ENGINEER	MD. HABIBUR RAHMAN DEPUTY TEAM LEADER	JEAN HENRY LABOYRIE TEAM LEADER
DATED: 00-00-0000	DWG NO.: DC-8-CEIP-1(P-16)-0000-7/31			DRAWN BY- CAD OPERATOR - MST. MOUSUMI KHATUN		

NOT TO SCALE

G:\Total drawing (MOUSUMI)\Mousumi\Package-3\Drainage Regulator\POLDER-16_DR-5\ Polder -16_DR-5_1V_KM 18+950.dwg