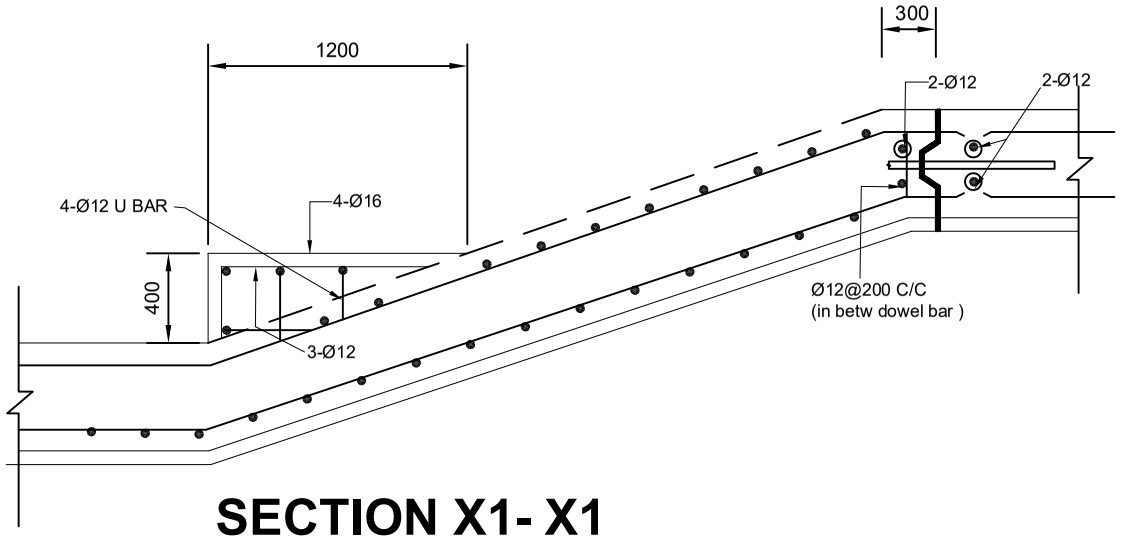

SECTION X1- X1

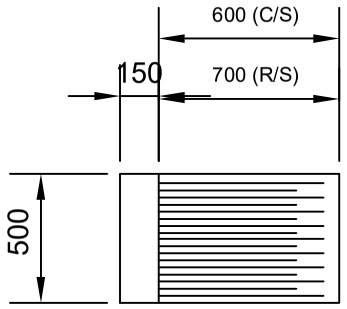

PLAN OF BAFFLE BLOCK

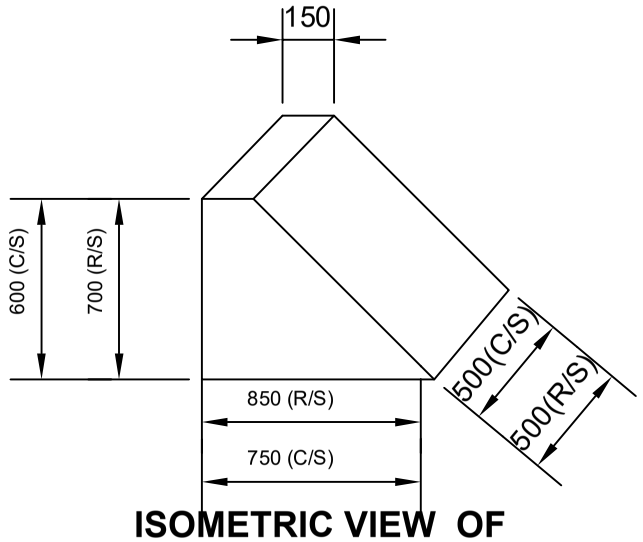

ISOMETRIC VIEW OF BAFFLE BLOCK

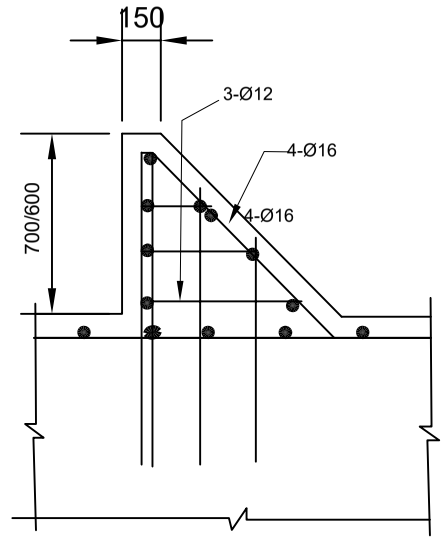

REINF. DETAILS OF BAFFLE BLOCK

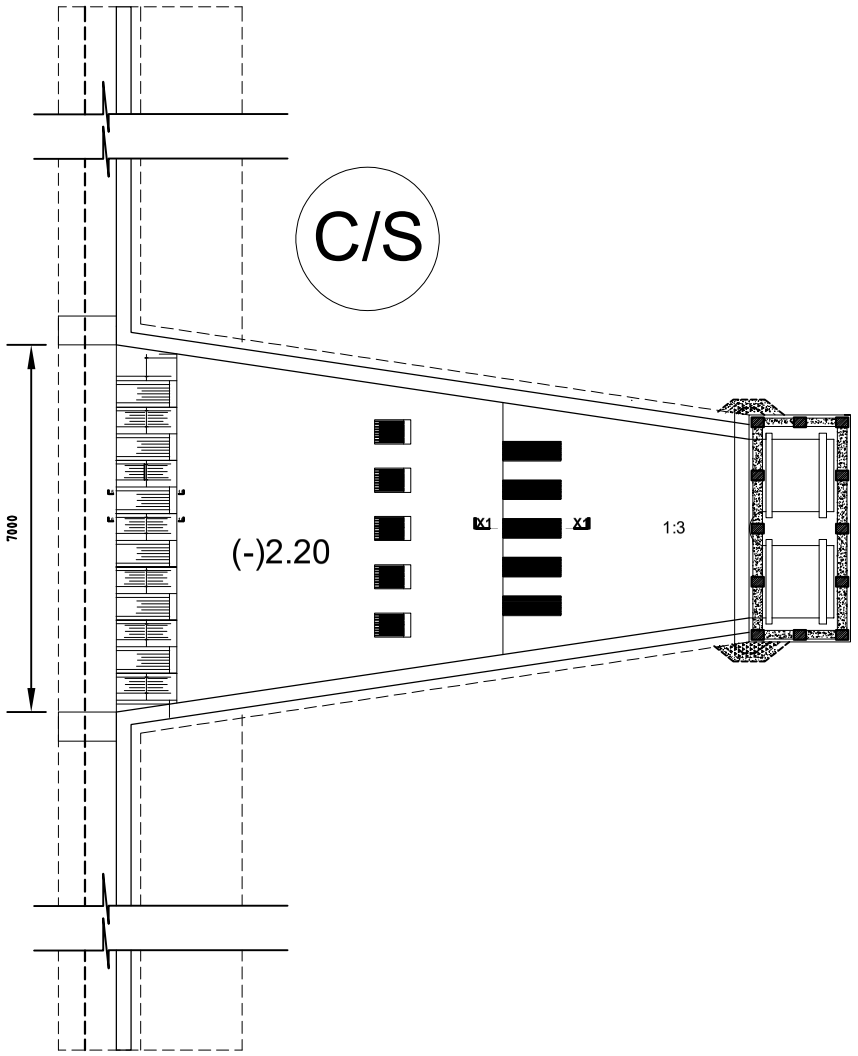

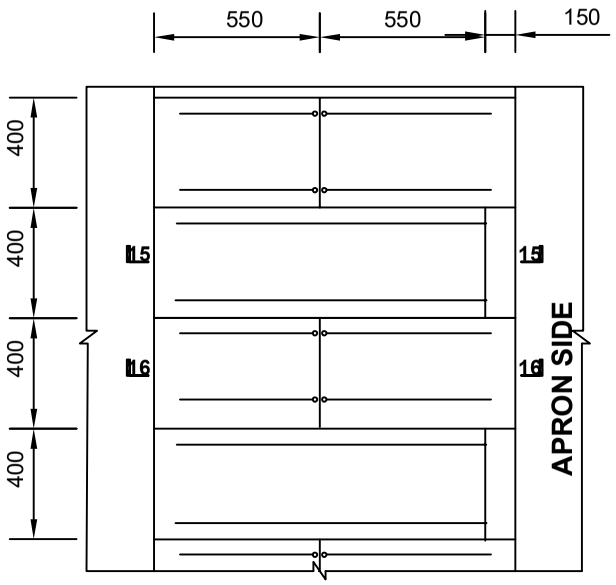

PART PLAN OF END SILL (C/S)

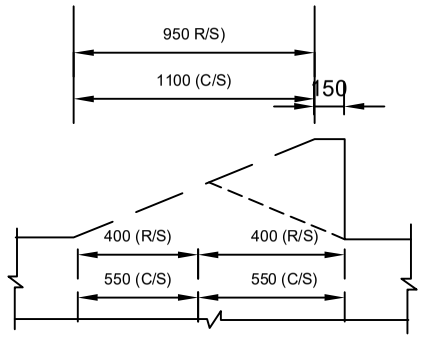

SEC. OF END SILL

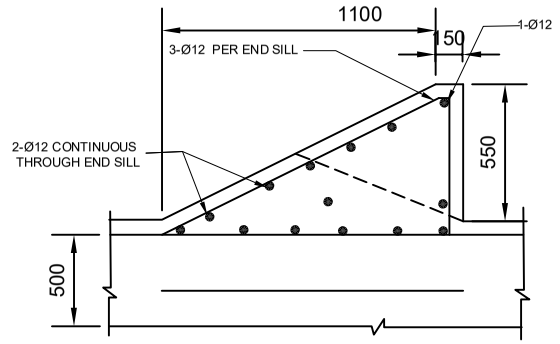

SECTION 15-15

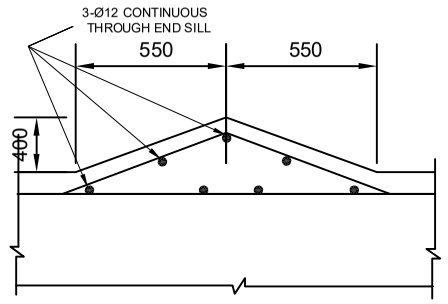

SECTION 16-16

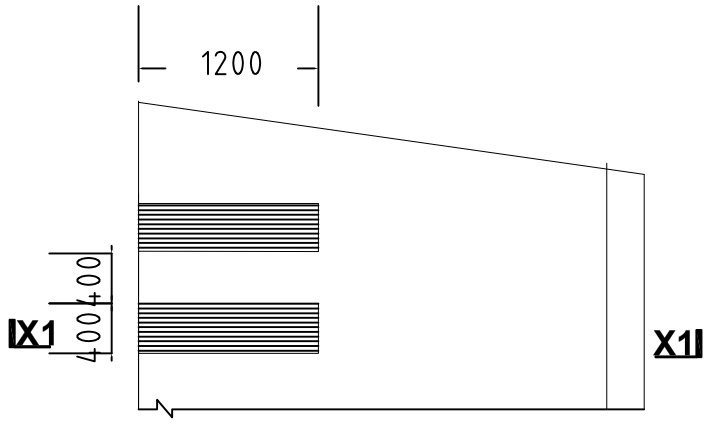

PLAN OF CHUTE BLOCK (C/S)

GOVERNMENT OF THE PEOPLE'S REPUBLIC OF BANGLADESH					
MINISTRY OF WATER RESOURCES					
BANGLADESH WATER DEVELOPMENT BOARD					
COASTAL EMBANKMENT IMPROVEMENT PROJECT, PHASE-II (CEIP-II)					
DESIGN OF DRAINAGE SLUICE DS-2 (2V-1.50mx1.80m) AT Ch. 12+140 Km IN POLDER NO. 7/1 UNDER SATKHIRA O&M DIVISION, BWDB, SATKHIRA DURING THE YEAR 2022-2023					
CHUTE, ENDSILL & BAFFLE REINFORCEMENT DETAILS (C/S)					
BANGLADESH WATER DEVELOPMENT BOARD			CONSULTANT : Royal HaskoningDHV Sub Consultants DDC, SPMC, KMC, CEGIS		
DESIGN CIRCLE -8			DESIGNED BY	CHECKED BY	REVIEWED BY	RECOMMENDED BY
REVIEWED BY	CHECKED BY	APPROVED BY	MD. NAZMUL HAQUE	MD. ANWAR HOSSAIN BHUIYAN	MOHAMMAD ALI	JEAN HENRY LABOYRIE
			DESIGN ENGINEER	DESIGN ENGINEER	DEPUTY TEAM LEADER	TEAM LEADER
	ABU SAYEED MD. MASUM	MD. SAIF UDDIN	SALEH ADIB TURASH	DATED: 23-02-2023		
	EXECUTIVE ENGINEER	SUPERINTENDING ENGINEER	JUNIOR DESIGN ENGINEER	DRG.NO.CEIP-2/P-7/1 SLUICE DS- 2		SHEET 16 OF 25

REV :	DATE :	DESCRIPTION :