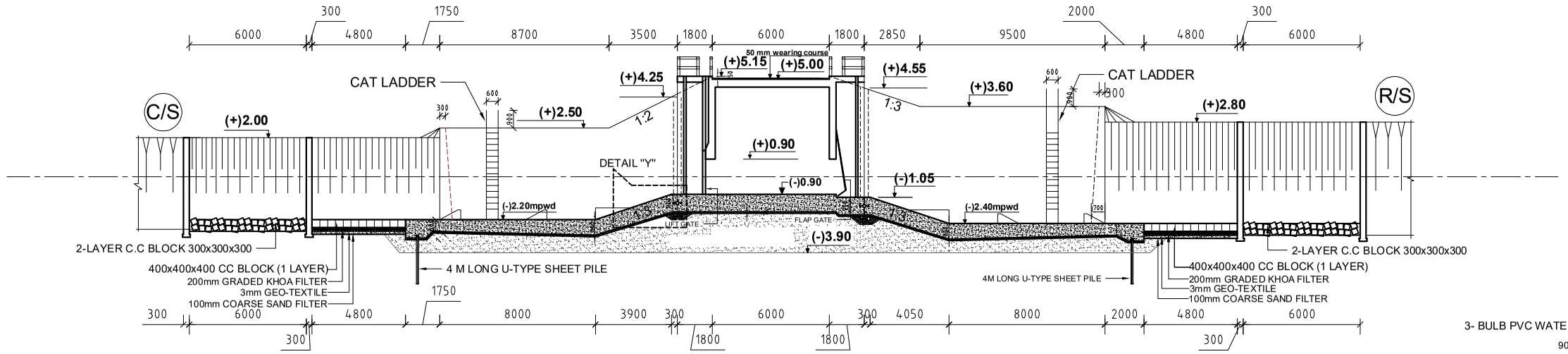

SECTION A-A

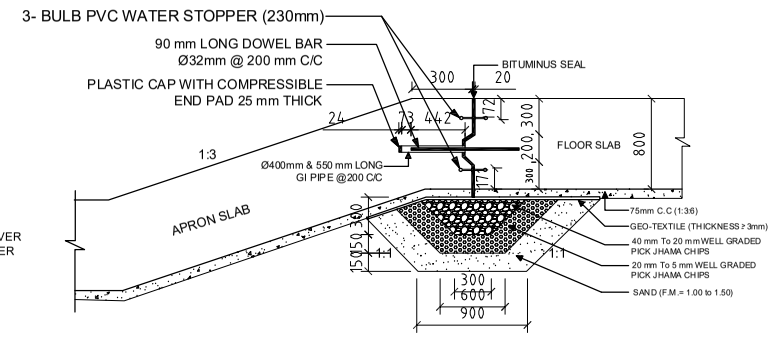

DETAIL "Y"

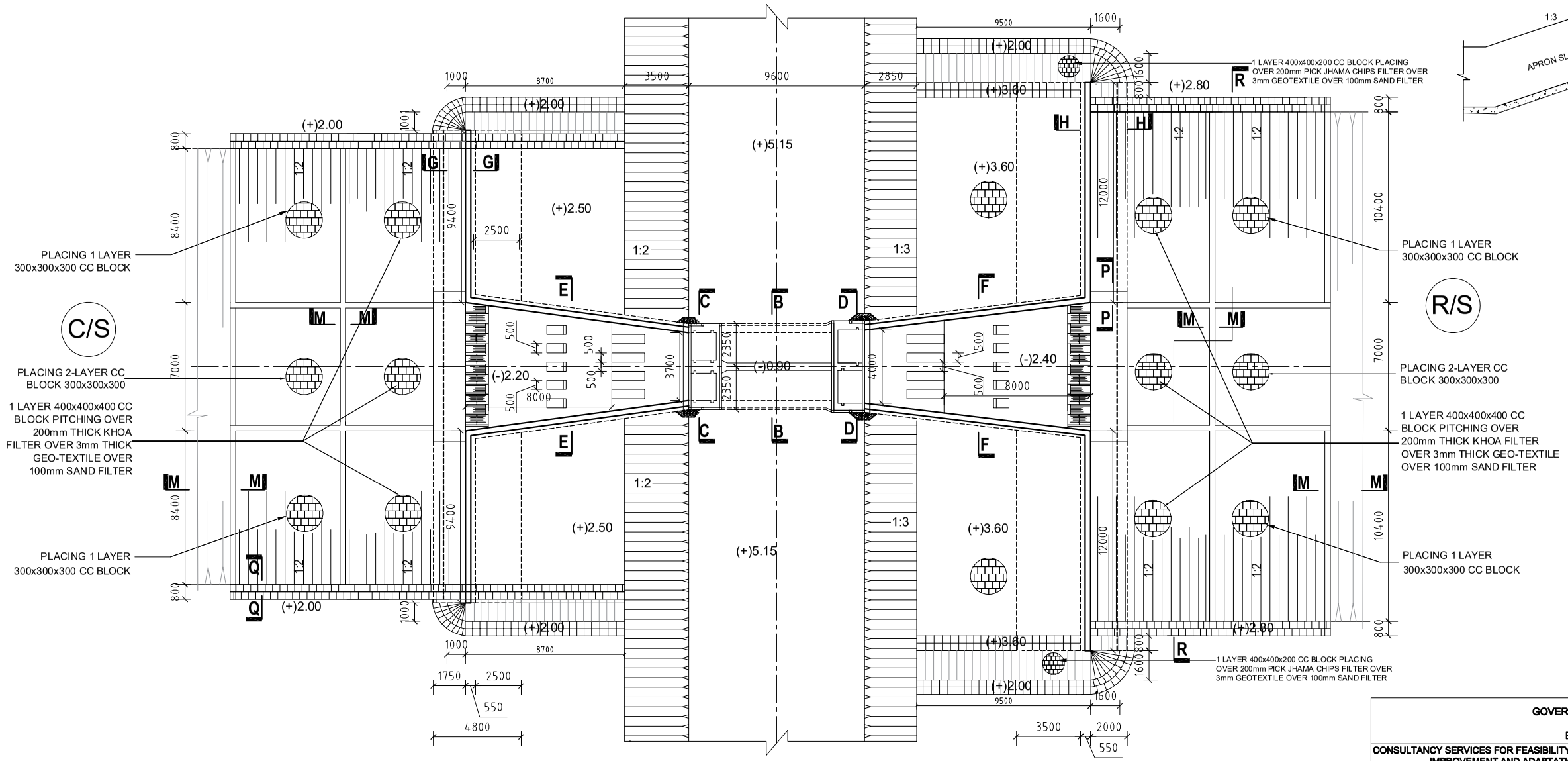

PLAN

GOVERNMENT OF THE PEOPLE'S REPUBLIC OF BANGLADESH MINISTRY OF WATER RESOURCES BANGLADESH WATER DEVELOPMENT BOARD						
CONSULTANCY SERVICES FOR FEASIBILITY STUDIES AND PREPARATION OF DETAILED DESIGN FOR THE COASTAL LIVELIHOOD IMPROVEMENT AND ADAPTATION ENHANCEMENT PROJECT (CLIMATE) (CONTRACT NO: CEIP-1/D3/S23)						
BANGLADESH WATER DEVELOPMENT BOARD			DETAILED DESIGN OF PROPOSED NEW DRAINAGE SLUICE DS- 2 (2V-1.50mx1.80m) AT Km 12+140 IN POLDER 7/1 UNDER CLIMATE PROJECT, BWDB, DISTRICT-SATKHIRA			
DESIGN CIRCLE-8			PLAN & SECTIONAL ELEVATION			
CHECKED BY:	REVIEWED BY:	APPROVED BY:	DESIGNED BY:	CHECKED BY:	REVIEWED BY:	CHECKED & RECOMMENDED BY:
ASSISTANT ENGINEER	EXECUTIVE ENGINEER	SUPERINTENDING ENGINEER	MD. NAZMUL HAQUE DESIGN ENGINEER	K M HUMAYUN KABIR Sr. DESIGN ENGINEER	MD. MOHAMMAD ALI DEPUTY TEAM LEADER	JEAN HENRY LABOYRIE TEAM LEADER
			DRG NO: 6 OF 25	DRAWN BY: ASADUZZAMAN RAHAT		DATE: 16-04-2023
			CONSULTANT:			