3.3 Volt Regulator

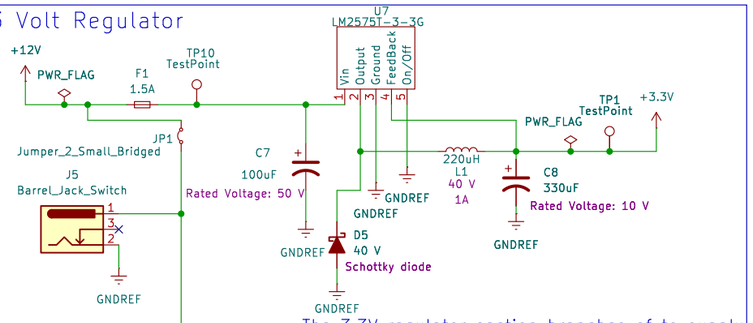

The 3.3V regulator section branches of to supply the ESP32, along with the Hall Effect Sensors. The Regulator used is the SMD version of the voltage regulator provided by the professor, LM2575T-3.3GOS-ND

5 Volt Regulator

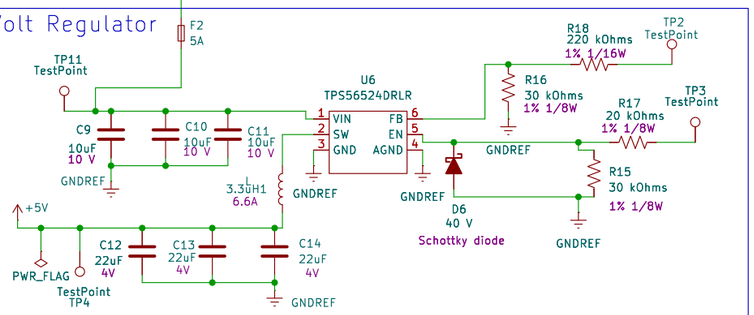

The voltage regulator choosen is an adjustable voltage output with an fixed 5A output.
The voltage regulator is sent to an output of 5V, this directly supplies the servos that require 5V, 2.5A each.

I^2C Bus 1

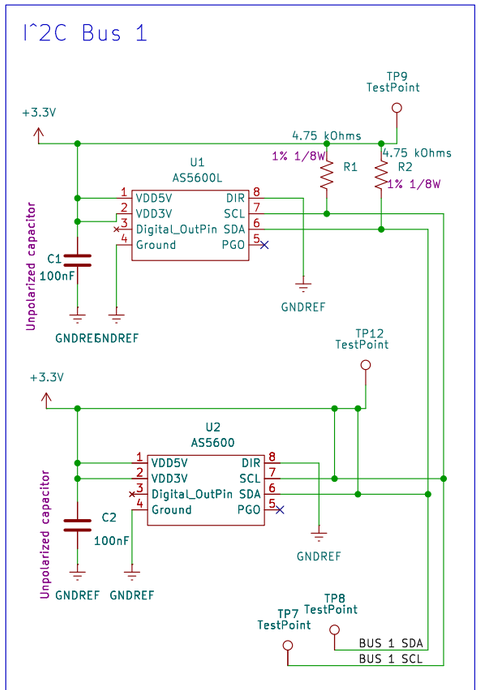

This I^2C Bus controls the servo motors that act as fins, these sensors only begin reading after pressing the Bus Change button.

I^2C Bus 0

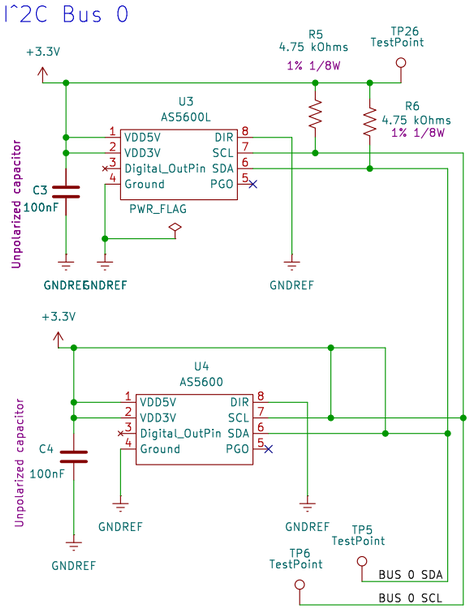

This I^2C Bus is the default bus that starts reading after the system starts. These sre positioned relatively close to the motors.

Sensor LEDs & Debuggging

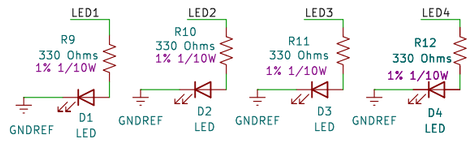

The LEDS are used as a system indicator, they are used in pair and are designated to each I^2C Buses. They are also used for the Debugging,alternating ON and OFF between them.

Servos

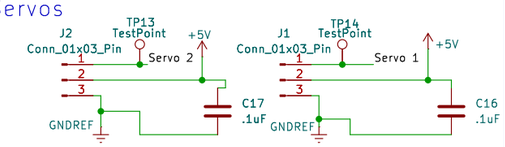

The servos are 2 1142 servos, here they are being represented as connector pins 01x03 since they only have 3 lines of connection.

Buttons

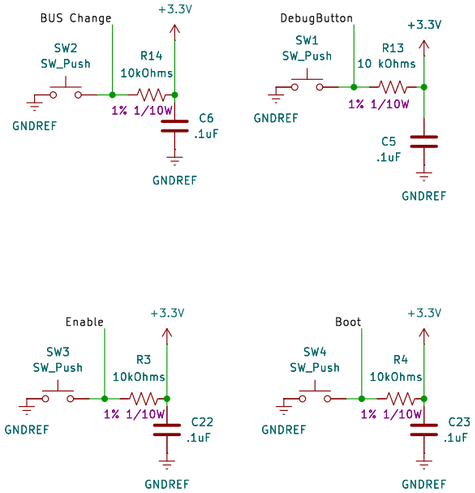

-Enbale Button: Allows for the reset of the code.
-Boot Button: For the debugging of the system code.
-Debugging Button: Forces a state change in the system, indicated by the toggling of the leds.
-Bus Change: Changes the operation, Bus 1 and Servos activate.

Connector In and Out

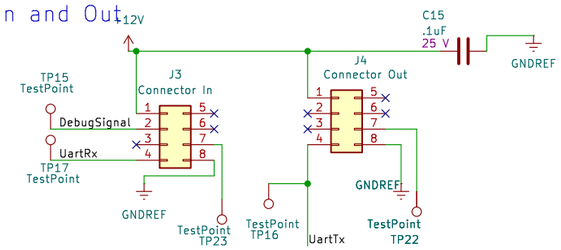

-Both connectors (In and Out), have a 12V coming out on Pin 1 as they are shared power and on pin 8 it is the teams shared ground.
- Connector In has the UartRX on pin 4 and a spare connection on pin 2.
-Connector Out has UartTX on pin 4 and a test point on pin 7.

Reference Nodes

These are used as reference node of all voltages, this is used in the need to debug need extra points to pull voltages from. There is also a ground refrence

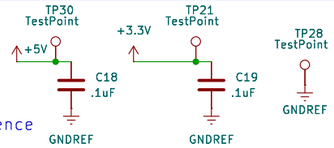

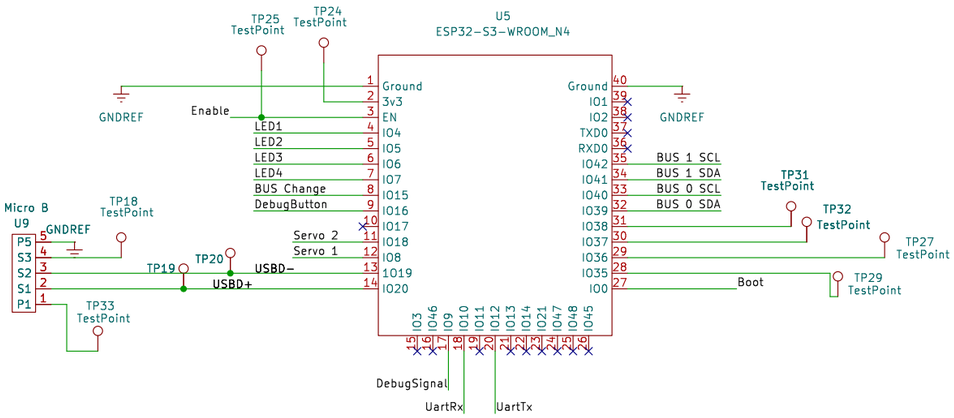

The ESP32 is shown with its appropriate connections.
the use of an external Micro B is used to progam the microchip.
The use of Testpoints was created in order to have extra pins available.

ASU		
Sheet: /		
File: 314_HallEffect.kicad_sch		
Title: Hall Effect Sensors		
Size: A3	Date: 2026-02-20	Rev:
KiCad E.D.A. 9.0.4		Id: 1/1