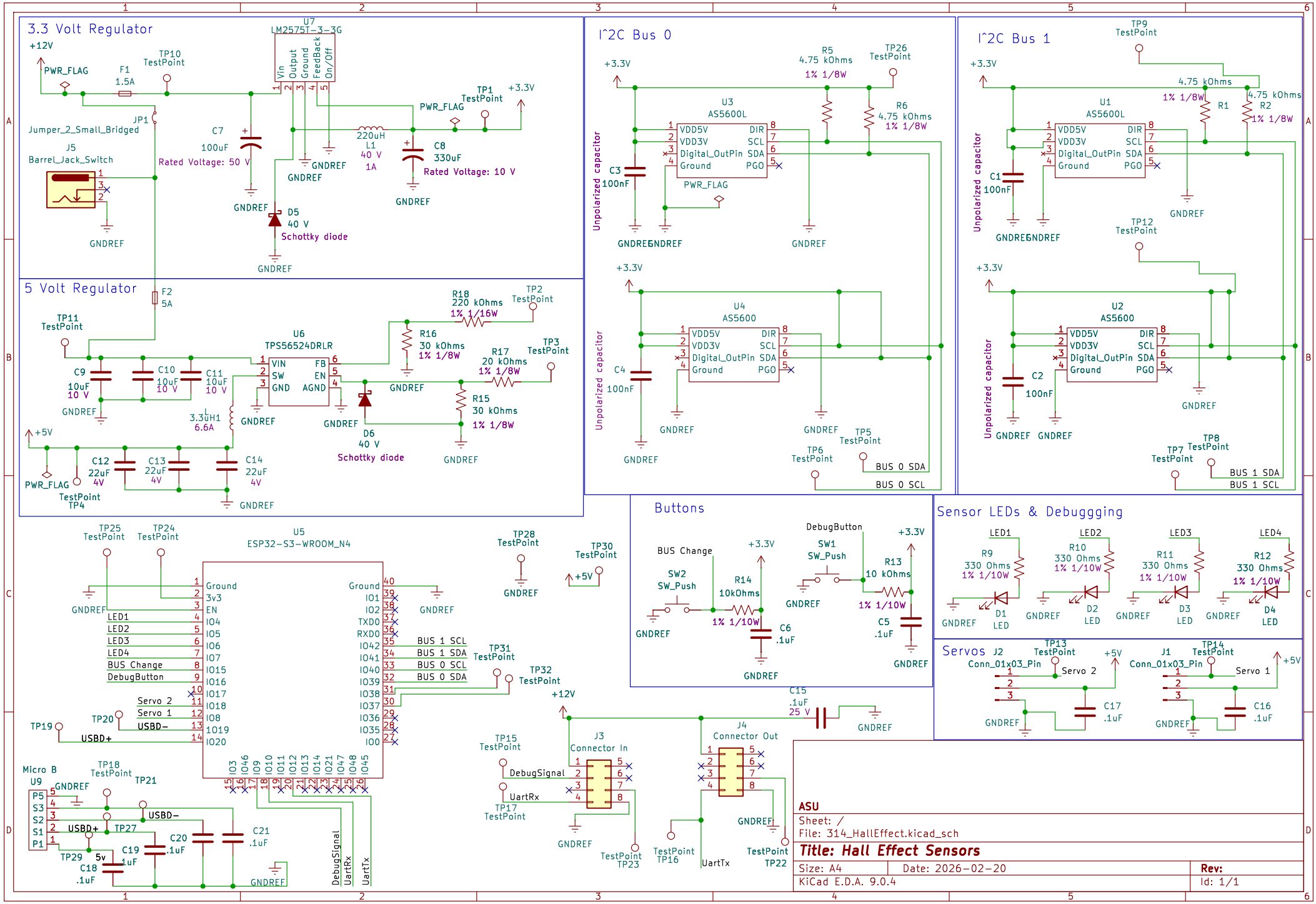
3.3 Volt Regulator
U7
LM2575T-3-3G
Vin
Output
Ground
FeedBack
On/Off
+12V
PWR_FLAG
F1
1.5A
TP10
TestPoint
JP1
Jumper_2_Small_Bridged
J5
Barrel_Jack_Switch
C7
100uF
Rated Voltage: 50 V
GNDREF
D5
40 V
Schottky diode
220uH
L1
40 V
1A
C8
330uF
Rated Voltage: 10 V
TP1
TestPoint
+3.3V
5 Volt Regulator
F2
5A
TP11
TestPoint
U6
TPS56524DRLR
VIN
SW
GND
FB
EN
AGND
C9
10uF
10 V
C10
10uF
10 V
C11
10uF
10 V
L
3.3uH1
6.6A
R18
220 kOhms
1% 1/16W
TP2
TestPoint
R16
30 kOhms
1% 1/8W
R17
20 kOhms
1% 1/8W
TP3
TestPoint
R15
30 kOhms
1% 1/8W
D6
40 V
Schottky diode
+5V
C12
22uF
4V
C13
22uF
4V
C14
22uF
4V
TP4
I^2C Bus 0
U3
AS5600L
VDD5V
VDD3V
Digital_OutPin
Ground
DIR
SCL
SDA
PGO
R5
4.75 kOhms
1% 1/8W
TP26
TestPoint
R6
4.75 kOhms
1% 1/8W
C3
100nF
Unpolarized capacitor
U4
AS5600
C4
100nF
TP5
TestPoint
TP6
TestPoint
BUS 0 SDA
BUS 0 SCL
I^2C Bus 1
TP9
TestPoint
U1
AS5600L
R1
4.75 kOhms
1% 1/8W
R2
4.75 kOhms
1% 1/8W
C1
100nF
TP12
TestPoint
U2
AS5600
C2
100nF
TP7
TestPoint
TP8
TestPoint
BUS 1 SDA
BUS 1 SCL
Buttons
BUS Change
SW2
SW_Push
R14
10kOhms
1% 1/10W
C6
.1uF
DebugButton
SW1
SW_Push
R13
10 kOhms
1% 1/10W
C5
.1uF
Sensor LEDs & Debuggging
LED1
R9
330 Ohms
1% 1/10W
D1
LED
LED2
R10
330 Ohms
1% 1/10W
D2
LED
LED3
R11
330 Ohms
1% 1/10W
D3
LED
LED4
R12
330 Ohms
1% 1/10W
D4
LED
Servos
J2
Conn_01x03_Pin
TP13
TestPoint
Servo 2
C17
.1uF
J1
Conn_01x03_Pin
TP14
TestPoint
Servo 1
C16
.1uF
TP25
TestPoint
TP24
TestPoint
U5
ESP32-S3-WROOM_N4
Ground
3v3
EN
IO4
IO5
IO6
IO7
IO15
IO16
IO17
IO18
IO8
IO19
IO20
IO1
IO2
TXD0
RXD0
IO42
IO41
IO40
IO39
IO38
IO37
IO36
IO35
IO0
LED1
LED2
LED3
LED4
BUS Change
DebugButton
Servo 2
Servo 1
USBD−
USBD+
BUS 1 SCL
BUS 1 SDA
BUS 0 SCL
BUS 0 SDA
TP28
TestPoint
TP30
TestPoint
TP31
TestPoint
TP32
TestPoint
TP19
TP20
Micro B
U9
P5
S3
S2
S1
P1
TP18
TestPoint
TP21
TP27
TP29
5v
C18
.1uF
C19
.1uF
C20
.1uF
C21
.1uF
DebugSignal
UartRx
UartTx
C15
.1uF
25 V
TP15
TestPoint
J3
Connector In
TP17
TestPoint
TP23
TP16
J4
Connector Out
TP22
ASU
Sheet: /
File: 314_HallEffect.kicad_sch
Title: Hall Effect Sensors
Size: A4
Date: 2026-02-20
Rev:
KiCad E.D.A. 9.0.4
Id: 1/1