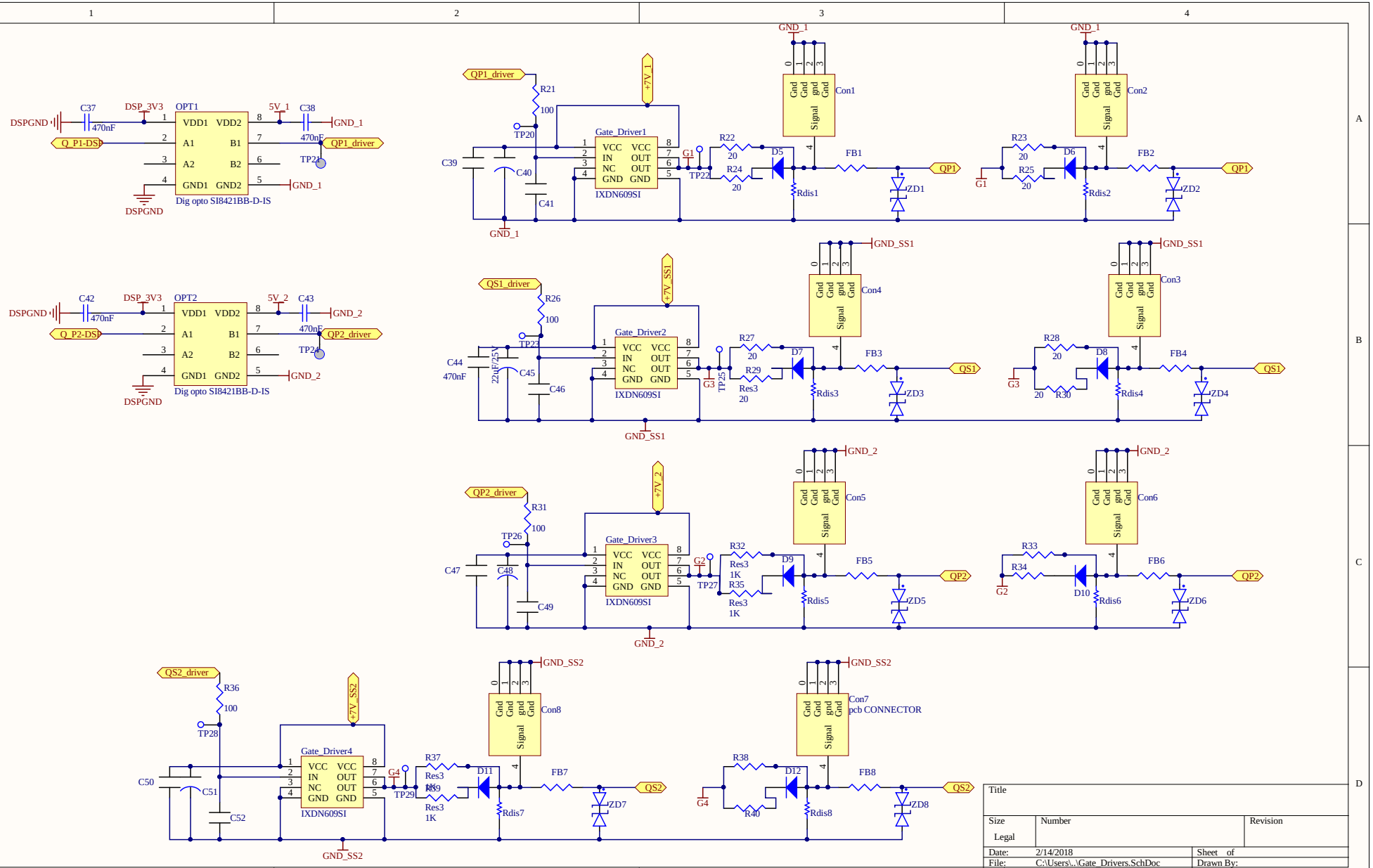
DSPGND
C37
470nF
DSP_3V3
OPT1
VDD1 VDD2
A1 B1
A2 B2
GND1 GND2
5V_1
C38
GND_1
Q_P1-DSP
470nF
QP1_driver
TP21
Dig opto SI8421BB-D-IS
QP1_driver
R21
100
TP20
+7V_1
Gate_Driver1
VCC VCC
IN OUT
NC OUT
GND GND
IXDN609SI
G1
TP22
C39
C40
C41
R22
20
R24
20
D5
Rdis1
FB1
ZD1
QP1
GND_1
Con1
Gnd Gnd gnd Gnd
Signal
Con2
R23
20
R25
20
D6
Rdis2
FB2
ZD2
C42
470nF
DSP_3V3
OPT2
5V_2
C43
GND_2
Q_P2-DSP
470nF
QP2_driver
TP24
Dig opto SI8421BB-D-IS
QS1_driver
R26
100
TP23
+7V_SS1
Gate_Driver2
IXDN609SI
G3
TP25
C44
470nF
22uF/25V
C45
C46
R27
20
R29
Res3
20
D7
Rdis3
FB3
ZD3
QS1
GND_SS1
Con4
Con3
R28
20
R30
20
D8
Rdis4
FB4
ZD4
QP2_driver
R31
100
TP26
+7V_2
Gate_Driver3
IXDN609SI
G2
TP27
C47
C48
C49
R32
Res3
1K
R35
Res3
1K
D9
Rdis5
FB5
ZD5
QP2
GND_2
Con5
Con6
R33
R34
D10
Rdis6
FB6
ZD6
QS2_driver
R36
100
TP28
+7V_SS2
Gate_Driver4
IXDN609SI
G4
TP29
C50
C51
C52
R37
Res3
1K
R39
Res3
1K
D11
Rdis7
FB7
ZD7
QS2
GND_SS2
Con8
Con7
pcb CONNECTOR
R38
R40
D12
Rdis8
FB8
ZD8
Title
Size
Legal
Number
Revision
Date: 2/14/2018
Sheet of
File: C:\Users\..\Gate_Drivers.SchDoc
Drawn By:

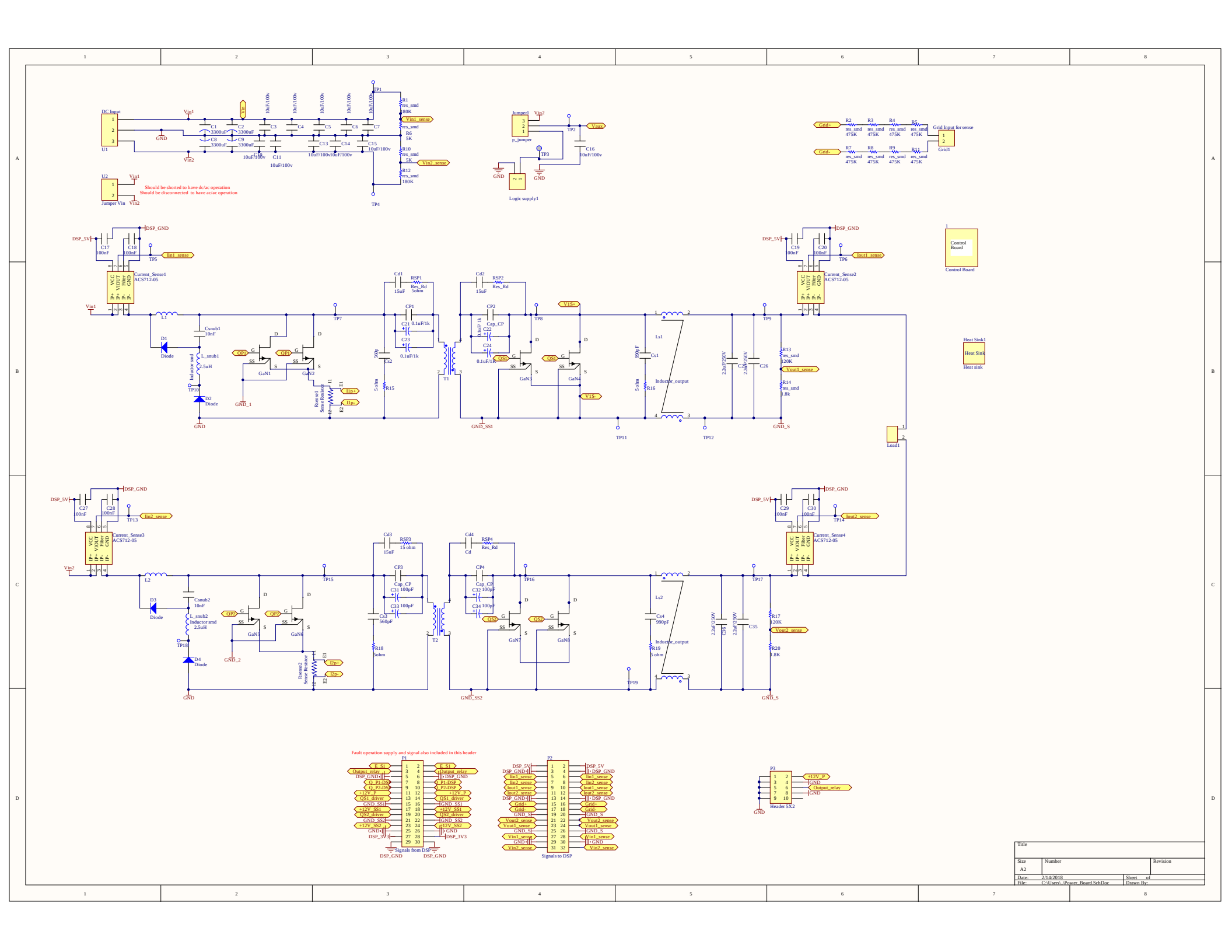
DC Input
U1
Vin1
Vin2
GND
C1 3300uF
C2 3300uF
C3
C4
C5
C6
C7
C8 3300uF
C9 3300uF
C10 10uF/100v
C11 10uF/100v
C12 10uF/100v
C13
C14
C15 10uF/100v
10uF/100v
TP1
TP4
R1 res_smd 180K
Vin1_sense
R6 5K
R10 res_smd 5K
Vin2_sense
R12 res_smd 180K
U2
Jumper Vin
Should be shorted to have dc/ac operation
Should be disconnected to have ac/ac operation
Jumper1
p_jumper
TP2
TP3
Vaux
C16 10uF/100v
Logic supply1
Gnd+
Grid-
R2 res_smd 475K
R3 res_smd 475K
R4 res_smd 475K
R5 res_smd 475K
R7 res_smd 475K
R8 res_smd 475K
R9 res_smd 475K
R11 res_smd 475K
Grid Input for sense
Grid1
DSP_5V
DSP_GND
C17 100nF
C18 100nF
TP5
Iin1_sense
Current_Sense1 ACS712-05
VCC VIOUT Filter GND IP+ IP+ IP- IP-
L1
Csnub1 10nF
D1 Diode
L_snub1 Inductor smd 2.5uH
TP10
D2 Diode
GND_1
QP1
GaN1
GaN2
Rsense1 Sense Resistor
I1
I2
E1
E2
Ip+
Ip-
TP7
Cd1 15uF
RSP1 Res_Rd 5ohm
CP1
C21 0.1uF/1k
C23 0.1uF/1k
Cs2 560p
R15 5 ohm
T1
Cd2 15uF
RSP2 Res_Rd
CP2
Cap_CP
C22 0.1uF/1k
C24 0.1uF/1k
TP8
V1S+
QS1
GaN3
GaN4
V1S-
GND_SS1
TP11
Ls1
Cs1 990pF
R16 5 ohm
Inductor_output
TP12
C25 2.2uF/250V
C26 2.2uF/250V
TP9
R13 res_smd 120K
Vout1_sense
R14 res_smd 1.8k
GND_S
DSP_5V
DSP_GND
C19 100nF
C20 100nF
TP6
Iout1_sense
Current_Sense2 ACS712-05
Control Board
Heat Sink1
Heat Sink
Heat sink
Load1
DSP_5V
DSP_GND
C27 100nF
C28 100nF
TP13
Iin2_sense
Current_Sense3 ACS712-05
Vin2
L2
Csnub2 10nF
D3 Diode
L_snub2 Inductor smd 2.5uH
TP18
D4 Diode
GND_2
QP2
GaN5
GaN6
Rsense2 Sense Resistor
I2p+
I2p-
TP15
Cd3 15uF
RSP3 15 ohm
CP3
Cap_CP
C31 100pF
C33 100pF
Cs3 560pF
R18 5ohm
T2
Cd4
RSP4 Res_Rd
CP4
Cap_CP
C32 100pF
C34 100pF
TP16
QS2
GaN7
GaN8
GND_SS2
TP19
Ls2
Cs4 990pF
R19 5 ohm
Inductor_output
C35 2.2uF/250V
C36 2.2uF/250V
TP17
R17 120K
Vout2_sense
R20 1.8K
GND_S
DSP_5V
DSP_GND
C29 100nF
C30 100nF
TP14
Iout2_sense
Current_Sense4 ACS712-05
Fault operation supply and signal also included in this header
P1
E_S1
Output_relay
DSP_GND
Q_P1-DSP
Q_P2-DSP
+12V_P
QS1_driver
GND_SS1
+12V_SS1
QS2_driver
GND_SS2
+12V_SS2
GND
DSP_3V3
Signals from DSP
P1-DSP
P2-DSP
GND
DSP_3V3
P2
DSP_5V
DSP_GND
Iin1_sense
Iin2_sense
Iout1_sense
Iout2_sense
Grid+
Grid-
Vout2_sense
Vout1_sense
Vin1_sense
Vin2_sense
Signals to DSP
P3
Header 5X2
+12V_P
GND
Output_relay
Title
Size A2
Number
Revision
Date: 2/14/2018
Sheet of
File: C:\Users\..\Power_Board.SchDoc
Drawn By:

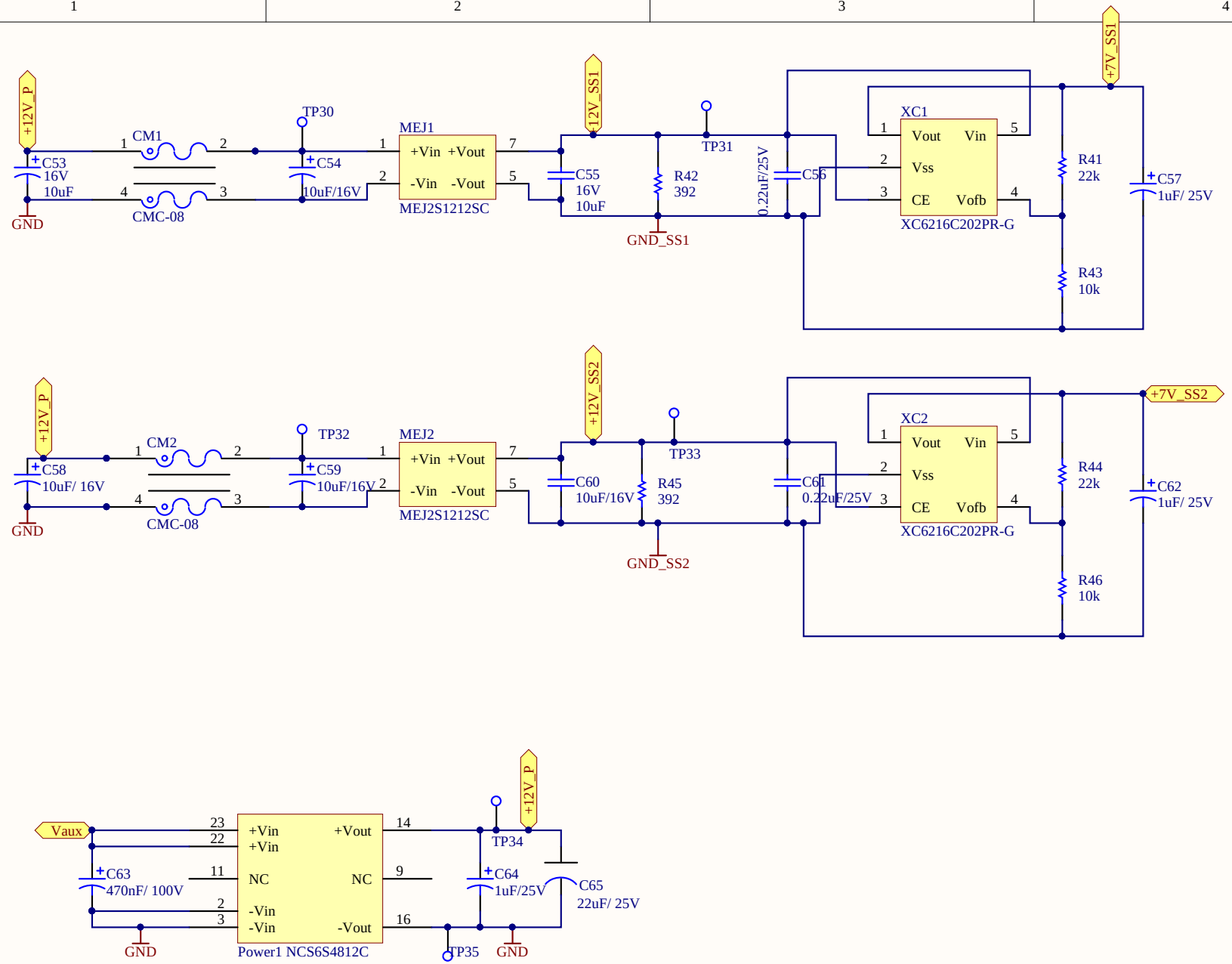


| | | |
|---|---|---|
| Title | | |
| Size A | Number | Revision |
| Date: 2/14/2018 | | Sheet of |
| File: C:\Users\..\Power_Supply.SchDoc | | Drawn By: |

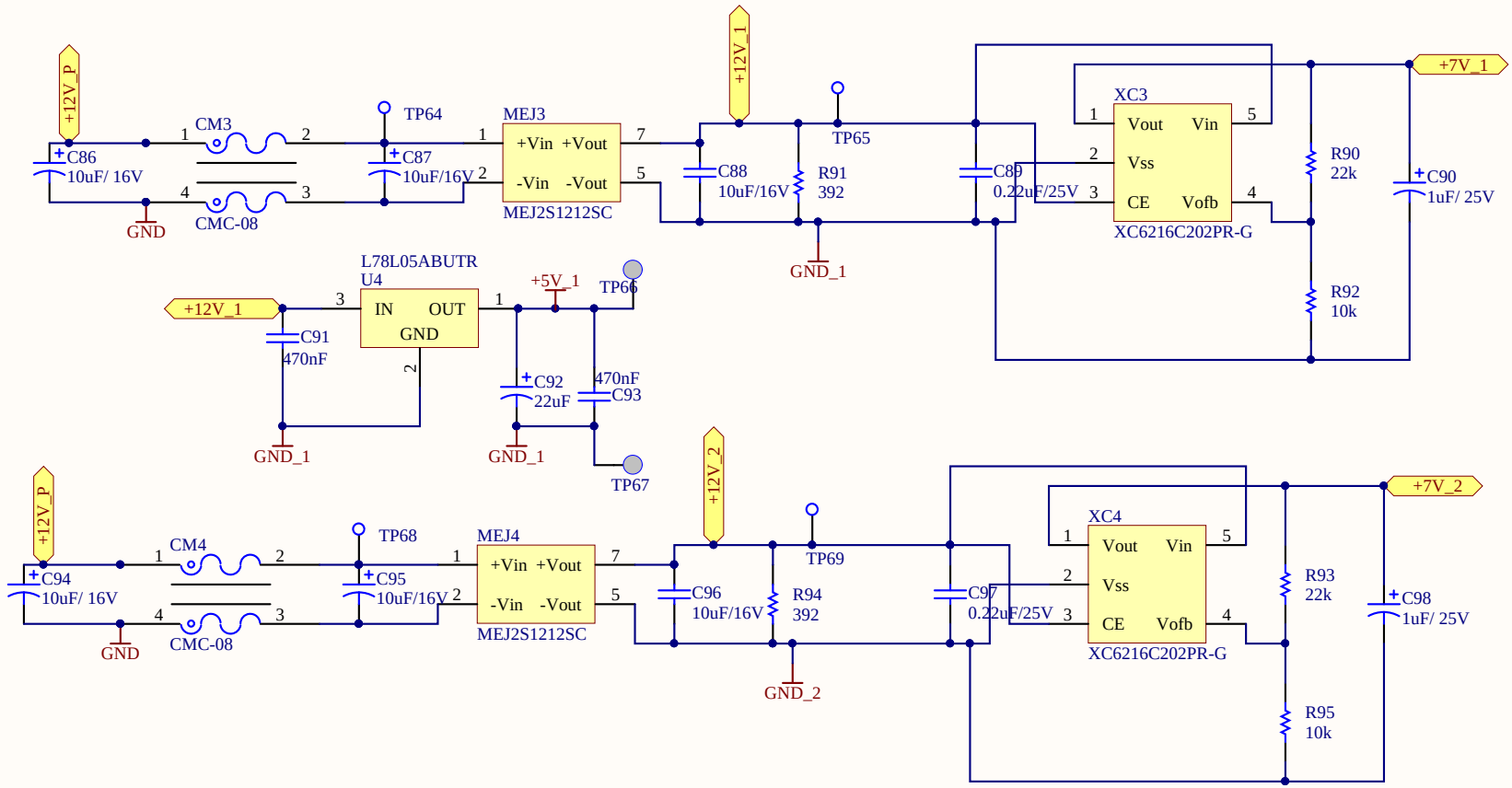


| | | |
|---|---|---|
| Title | | |
| Size A | Number | Revision |
| Date: 2/14/2018 | Sheet of | |
| File: C:\Users\..\Power_Supply2.SchDoc | Drawn By: | |

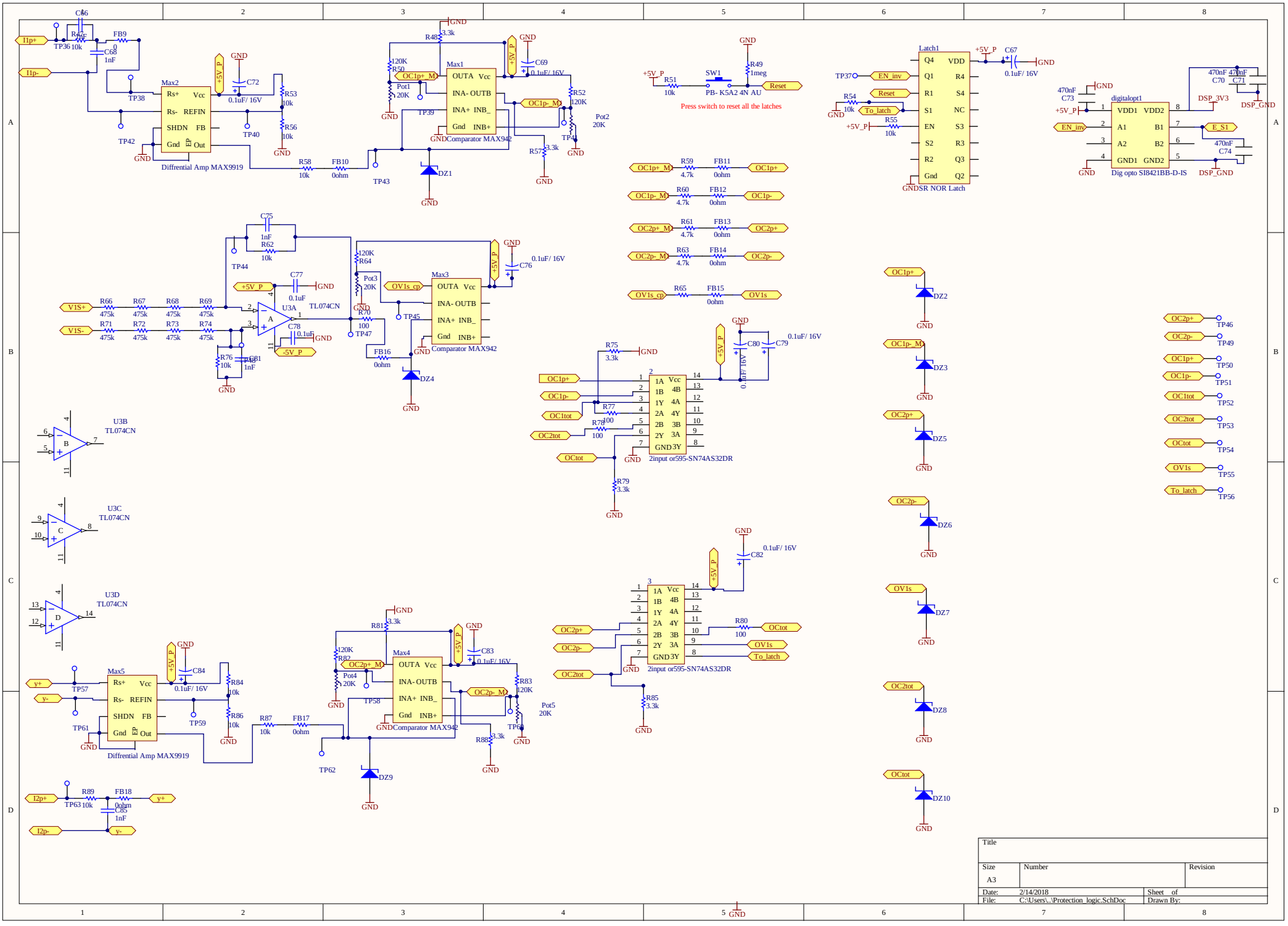

Max2
Diffrential Amp MAX9919
Max1
GNDComparator MAX942
Max3
Comparator MAX942
Max4
GNDComparator MAX942
Max5
Diffrential Amp MAX9919
Latch1
GNDSR NOR Latch
digitalopt1
Dig opto SI8421BB-D-IS
Press switch to reset all the latches
2input or595-SN74AS32DR
2input or595-SN74AS32DR
U3A
TL074CN
U3B
TL074CN
U3C
TL074CN
U3D
TL074CN
Title
Size
A3
Number
Revision
Date: 2/14/2018
File: C:\Users\..\Protection_logic.SchDoc
Sheet of
Drawn By:

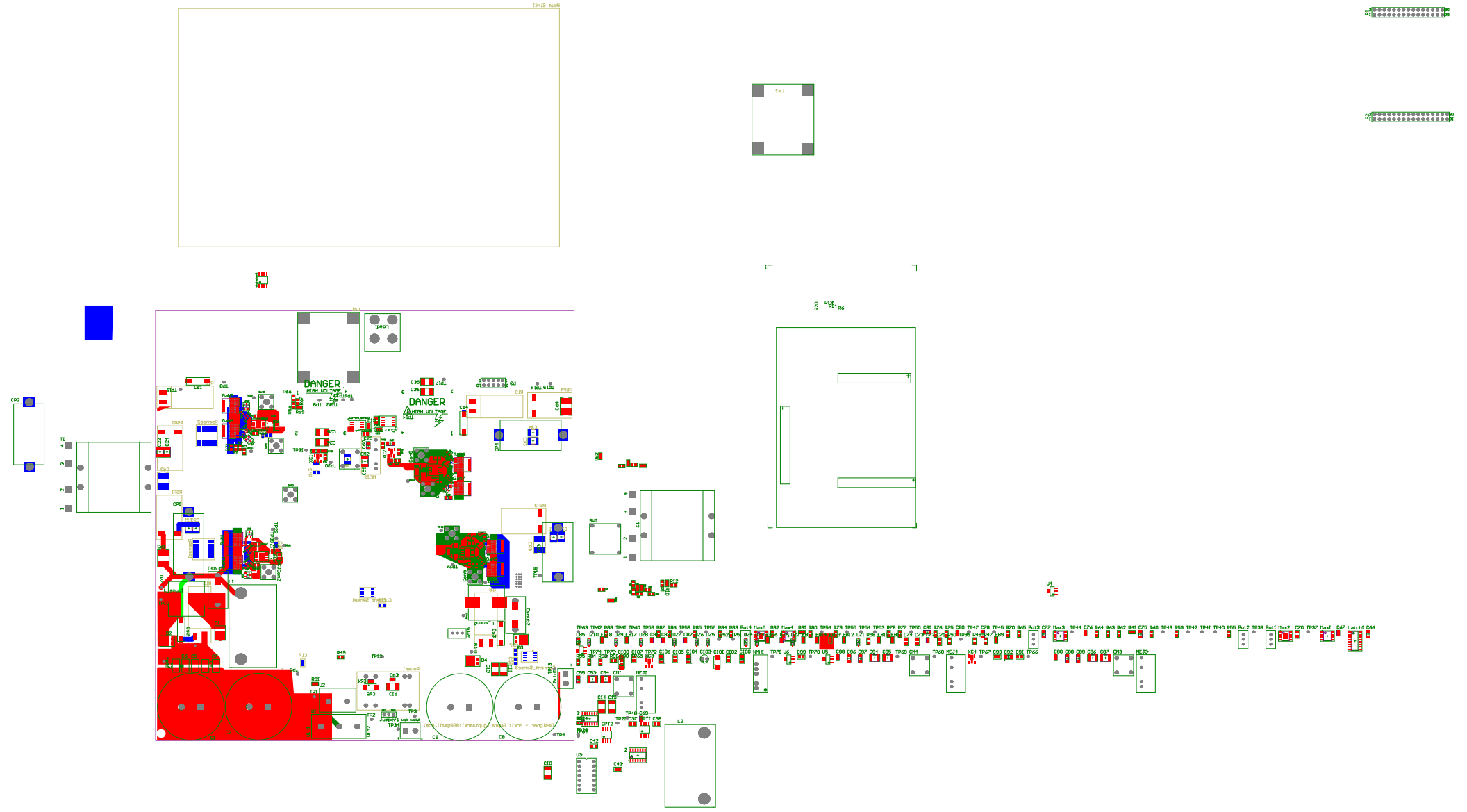
DANGER
HIGH VOLTAGE
DANGER
HIGH VOLTAGE

| Item # | mn Name Error:Manufac | #Column Name Error:Manufacturer No | Quantity | #Column Name Error:Note | Designator | Description | Footprint | Comment | LibRef |
|---|---|---|---|---|---|---|---|---|---|
| 1 | | | 4 | | D1, D2, D3, D4 | VS-4ESH02HM3 | TO-277A | Diode | Diode |
| 2 | | | 1 | | SW1 | Switch | Push Button_New | PB- KSA2 4N AU | SW-PB |
| 3 | | | 4 | | R15, R16, R18, R19 | snubber_res_film | Res_Snub | res_snubber | res_snubber |
| 4 | | | 89 | | FB9, FB10, FB11, FB12, FB13, FB14, FB15, FB16, FB17, FB18, R1, R2, R3, R4, R5, R6, R7, R8, R9, R10, R11, R12, R13, R14, R17, R20, R41, R42, R43, R44, R45, R46, R47, R48, R49, R50, R51, R52, R53, R54, R55, R56, R57, R58, R59, R60, R61, R62, R63, R64, R65, R66, R67, R68, R69, R70, R71, R72, R73, R74, R75, R76, R77, R78, R79, R80, R81, R82, R83, R84, R85, R86, R87, R88, R89, R90, R91, R92, R93, R94, R95, Rdis1, Rdis2, Rdis3, Rdis4, Rdis5, Rdis6, Rdis7, Rdis8 | smd_res | res_smd | res_smd | res_smd |
| 5 | | | 2 | | R25, R30 | Resistor | J1-0603 | 20 | Res3 |
| 6 | | | 26 | | FB1, FB2, FB3, FB4, FB5, FB6, FB7, FB8, R21, R22, R23, R24, R26, R27, R28, R29, R31, R32, R33, R34, R35, R36, R37, R38, R39, R40 | Resistor | J1-0603 | Res3 | Res3 |
| 7 | | | 3 | | U4, U5, U6 | Positive Voltage Regulator | Reg SOT-89 +5 | L78L05ABUTR | L78L05ABZ |
| 8 | | | 1 | | C53 | Polarized Capacitor (Surface Mount) | 1812 | 16V | Cap Pol3 |
| 9 | | | 15 | | C21, C22, C23, C24, C31, C32, C33, C34, C54, C58, C59, C86, C87, C94, C95 | Polarized Capacitor (Surface Mount) | 1812 | Cap Pol3 | Cap Pol3 |
| 10 | | | 15 | | C57, C62, C63, C64, C67, C69, C72, C76, C79, C80, C82, C83, C84, C90, C98 | Polarized Capacitor (Surface Mount) | C0805 | Cap Pol3 | Cap Pol3 |
| 11 | | | 1 | | C103 | Polarized Capacitor (Radial) | CAP-10u-16V | electrolytic | Cap Pol1 |
| 12 | | | 2 | | C101, C108 | Polarized Capacitor (Radial) | Cap tantal 22u-25V | Tantalium | Cap Pol1 |
| 13 | | | 4 | | C92, C100, C104, C106 | Polarized Capacitor (Radial) | Cap Tantal 3216 | TantaliumT520A226M006ATE090 | Cap Pol1 |
| 14 | | | 8 | | D5, D6, D7, D8, D9, D10, D11, D12 | PMEG2010EPK | PMEG2010EPK | PMEG2010EPK | PMEG2010EPK |
| 15 | | | 1 | | U7 | Negative-Voltage Regulator | Reg SOT-89 | L79L05ABUTR | µA79M05CKTPR |
| 16 | | | 10 | | DZ1, DZ2, DZ3, DZ4, DZ5, DZ6, DZ7, DZ8, DZ9, DZ10 | MMSZ5221BS | MMSZ5221BS | MMSZ5221BS | MMSZ5221BS |
| 17 | | | 2 | | Max2, Max5 | MAX9919NASA+ | SOIC127P600X168_HS-9N | Diffrential Amp MAX9919 | Max9919 |
| 18 | | | 3 | | Max1, Max3, Max4 | MAX942ESA+ | SOIC 8_no EP | Comparator MAX942 | Max942 |
| 19 | | | 1 | | U8 | Low-Noise JFET-Input Operational Amplifier | DIP14 | TL074CN | TL074J |
| 20 | | | 4 | | C1, C2, C8, C9 | LLS2A332MELC | Cap_3300uF_35mm height | 3300uF | 3300uF |
| 21 | | | 1 | | P2 | Header, 16-Pin, Dual row | HDR2X16 | Signals to DSP | Header 16X2 |
| 22 | | | 1 | | P1 | Header, 15-Pin, Dual row | HDR2X15 | Signals from DSP | Header 15X2 |
| 23 | | | 1 | | P3 | Header, 5-Pin, Dual row | HDR2X5 | Header 5X2 | Header 5X2 |
| 24 | | | 8 | | ZD1, ZD2, ZD3, ZD4, ZD5, ZD6, ZD7, ZD8 | DZ23C8V2-7-F | Zener Diode | 8.2 v | Zener_diode |
| 25 | | | 4 | | CM1, CM2, CM3, CM4 | Common mode choke | CMC-08 | CMC-08 | CMC-08 |
| 26 | | | 1 | | Latch1 | CD4043BDR | SR latch | SR NOR Latch | SR Latch |
| 27 | | | 8 | | C55, C66, C68, C75, C77, C78, C81, C85 | Capacitor (Semiconductor SIM Model) | C1206 | 16V | Cap Semi |
| 28 | | | 7 | | C56, C60, C61, C88, C89, C96, C97 | Capacitor (Semiconductor SIM Model) | C1206 | Cap Semi | Cap Semi |
| 29 | | | 10 | | C37, C38, C42, C43, C91, C93, C99, C102, C105, C107 | Capacitor | Capacitor 0805 | Cap | Cap |
| 30 | | | 5 | | Pot1, Pot2, Pot3, Pot4, Pot5 | 3296W-1-253LF | Pot | 20K | TRIM POT |
| 31 | | | 20 | | C17, C18, C19, C20, C27, C28, C29, C30, C39, C41, C44, C46, C47, C49, C50, C52, C70, C71, C73, C74 | | Cap_SMD | 100nF | Cap_SMD |
| 32 | | | 1 | | RSP3 | | Res-RS | 15 ohm | Res_Rd |
| 33 | | | 3 | | Cd1, Cd2, Cd3 | | Cd | 15uF | Cd |
| 34 | | | 4 | | C40, C48, C51, C65 | | Cap_tantalum | 22uF | Cap_tantalum |
| 35 | | | 1 | | C45 | | Cap_tantalum | 22uF/25V | Cap_tantalum |
| 36 | | | 2 | | 2, 3 | | 2inputor | 2input or595-SN74AS32DR | 2 input OR |
| 37 | | | 1 | | Cs2 | | Cap-Cs | 560p | Cap-CS |
| 38 | | | 1 | | Cs3 | | Cap-Cs | 560pF | Cap-CS |
| 39 | | | 1 | | Cs1 | | Cap-Cs | 990pF | Cap-CS |
| 40 | | | 4 | | Current_Sense1, Current_Sense2, Current_Sense3, Current_Sense4 | | SOIC-8 | ACS712-05 | Current Sensor 5A |
| 41 | | | 1 | | Logic supply1 | | Auxiliary connector | Auxiliary connector | Auxiliary connector |
| 42 | | | 1 | | Cs4 | | Cap-Cs | Cap cdv16ff101j03 | Cap-CS |
| 43 | | | 2 | | Csnub1, Csnub2 | | Cap-Csnub | Cap DPPM10S22K-F | Cap-Csnub |
| 44 | | | 3 | | CP1, CP2, CP4 | | Cap_cp | Cap_CP | Cap_CP |
| 45 | | | 1 | | CP3 | | Cap_cp - small | Cap_CP | Cap_CP |
| 46 | | | 1 | | Cd4 | | Cd | Cd | Cd |
| 47 | | | 6 | | Con1, Con2, Con4, Con5, Con6, Con8 | | PCBComponent_1 | Component_1 | Component_1 |
| 48 | | | 1 | | Load1 | | Connector_60A | Connector 60A | Connector 60A |
| 49 | | | 1 | | 1 | | Control Board | Control Board | Control Board |
| 50 | | | 1 | | U1 | | P-terminal 3 | DC Input | P-Terminal 3 |
| 51 | | | 3 | | digitalopt1, OPT1, OPT2 | | SO8 TS27I2 | Dig opto SI8421BB-D-IS | Digital Isolator, Component_1, Component_1 |
| 52 | | | 1 | | Grid1 | | Auxiliary connector | Grid Input for sense | Auxiliary connector |
| 53 | | | 8 | | GaN1, GaN2, GaN3, GaN4, GaN5, GaN6, GaN7, GaN8 | | GS66508B | GS66508B | GS66508B |
| 54 | | | 1 | | Heat Sink1 | | Heat Sink | Heat sink | Heat sink |
| 55 | | | 1 | | L1 | | Inductor_small | inductor | inductor |
| 56 | | | 1 | | L2 | | Inductor_small_mirror | inductor | inductor |
| 57 | | | 2 | | L_snub1, L_snub2 | | Inductor surface mount | Inductor smd | Inductor smd |
| 58 | | | 2 | | Ls1, Ls2 | | Inductor output | Inductor_output | Inductor_output |
| 59 | | | 4 | | Gate_Driver1, Gate_Driver2, Gate_Driver3, Gate_Driver4 | | Gate driver _low side | IXDN609SI | Gate driver low side |
| 60 | | | 1 | | U2 | | P-Terminal 2 | Jumper Vin | P-Terminal 2 |
| 61 | | | 4 | | MEJ1, MEJ2, MEJ3, MEJ4 | | MEJ2 | MEJ2S1212SC | Power supply2 |
| 62 | | | 1 | | Power1 | | Power_main | NCS6S4812C | Power_main |
| 63 | | | 1 | | NMH1 | | NMH1209SC | NMH1209SC | NMH----SC_1 |
| 64 | | | 15 | | C3, C4, C5, C6, C7, C10, C11, C13, C14, C15, C16, C25, C26, C35, C36 | | Output cap | Output_cap | Output_cap |
| 65 | | | 2 | | Con3, Con7 | | PCB_CONNECTOR | pcb CONNECTOR | pcb CONNECTOR |
| 66 | | | 1 | | Jumper1 | | Header1*3 | p_jumper | p_jumper |
| 67 | | | 3 | | RSP1, RSP2, RSP4 | | Res-RS | Res_Rd | Res_Rd |
| 68 | | | 2 | | Rsense1, Rsense2 | | Sense resistor | Sense Resistor | Sense Resistor |
| 69 | | | 74 | | TP1, TP2, TP3, TP4, TP5, TP6, TP7, TP8, TP9, TP10, TP11, TP12, TP13, TP14, TP15, TP16, TP17, TP18, TP19, TP20, TP21, TP22, TP23, TP24, TP25, TP26, TP27, TP28, TP29, TP30, TP31, TP32, TP33, TP34, TP35, TP36, TP37, TP38, TP39, TP40, TP41, TP42, TP43, TP44, TP45, TP46, TP47, TP48, TP49, TP50, TP51, TP52, TP53, TP54, TP55, TP56, TP57, TP58, TP59, TP60, TP61, TP62, TP63, TP64, TP65, TP66, TP67, TP68, TP69, TP70, TP71, TP72, TP73, TP74 | | Test Point | Test Point | Test Point |
| 70 | | | 2 | | T1, T2 | | Transformer | Transformer | Transformer |
| 71 | | | 4 | | XC1, XC2, XC3, XC4 | | SOT-89-5 | XC6216C202PR-G | power supply |