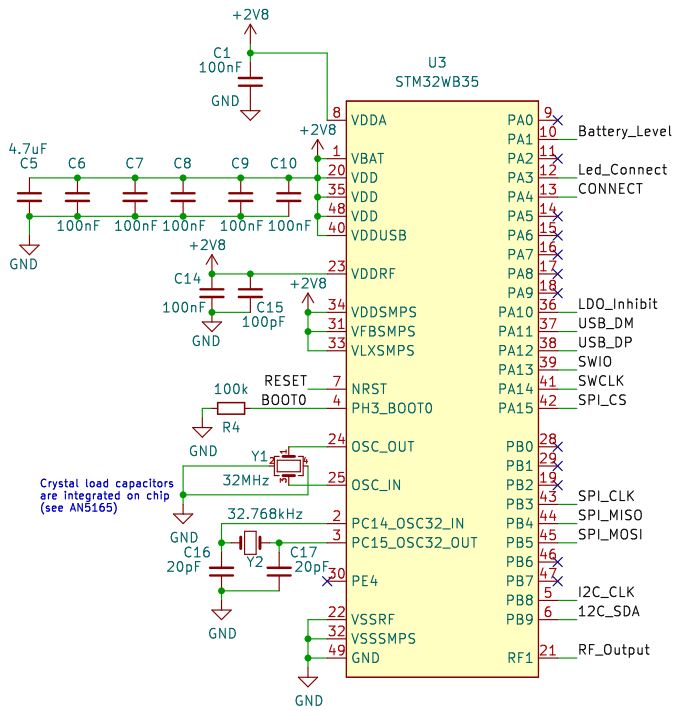

MCU and RF

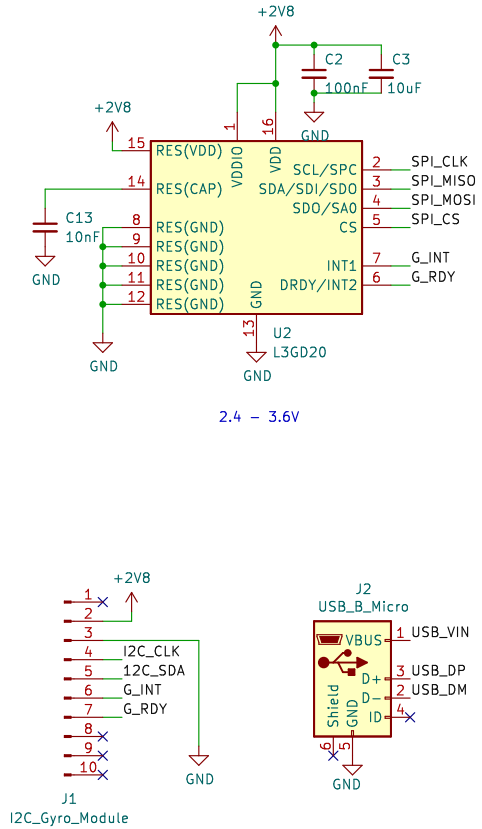

Gyroscope and USB

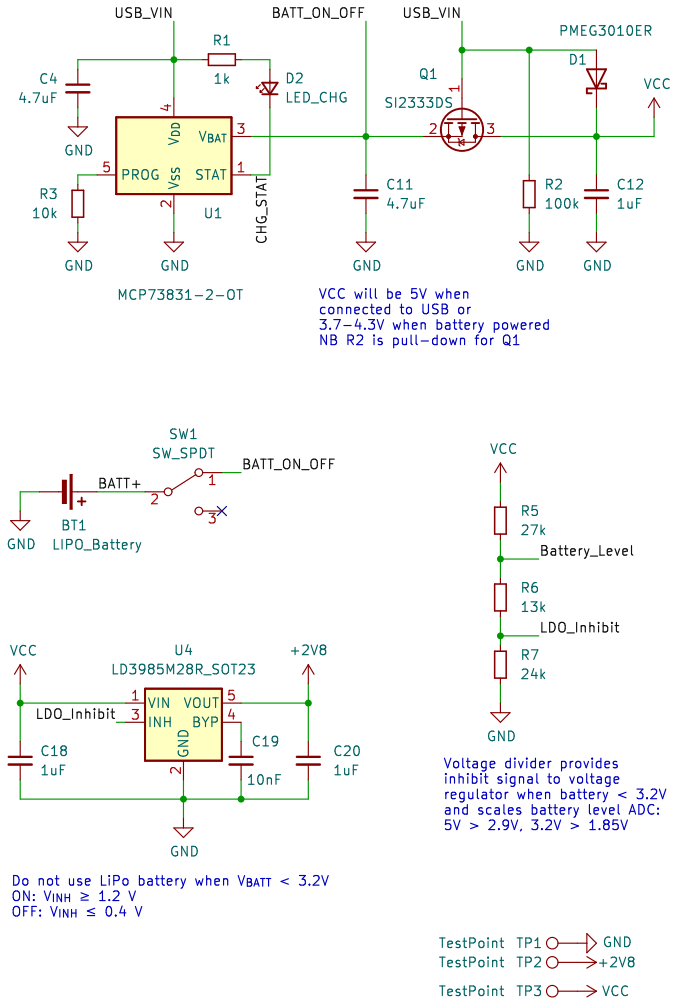

Power

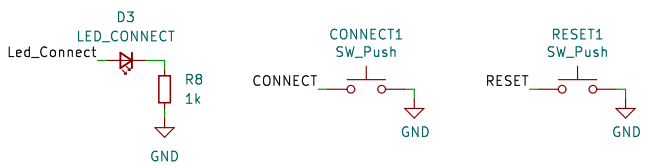

LED/Buttons

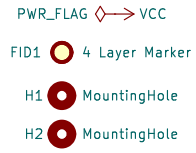

v1 Errata:
- IMU MOSI and MISO signals switched (see STM32F429 Discovery schematic)
- Connect PB9 (marked as 'I2C_SDA') to Gyroscope interrupt G_INT
- Connect PB8 (marked as 'I2C_CLK') to Gyroscope ready G_RDY
- PA0 and PA2 are only pins that can wake from shutdown – attach to Gyro?
- Mosfet Q1 source and drain reversed
- PA10 does not need to be connected to LDO_Inhibit

Mountjoy Modular

Sheet: /
File: Ball_Remote_Components.kicad_sch

Title: Ball Base Unit

Size: A4	Date:	Rev:
KiCad E.D.A. eeschema 7.0.8		Id: 1/1