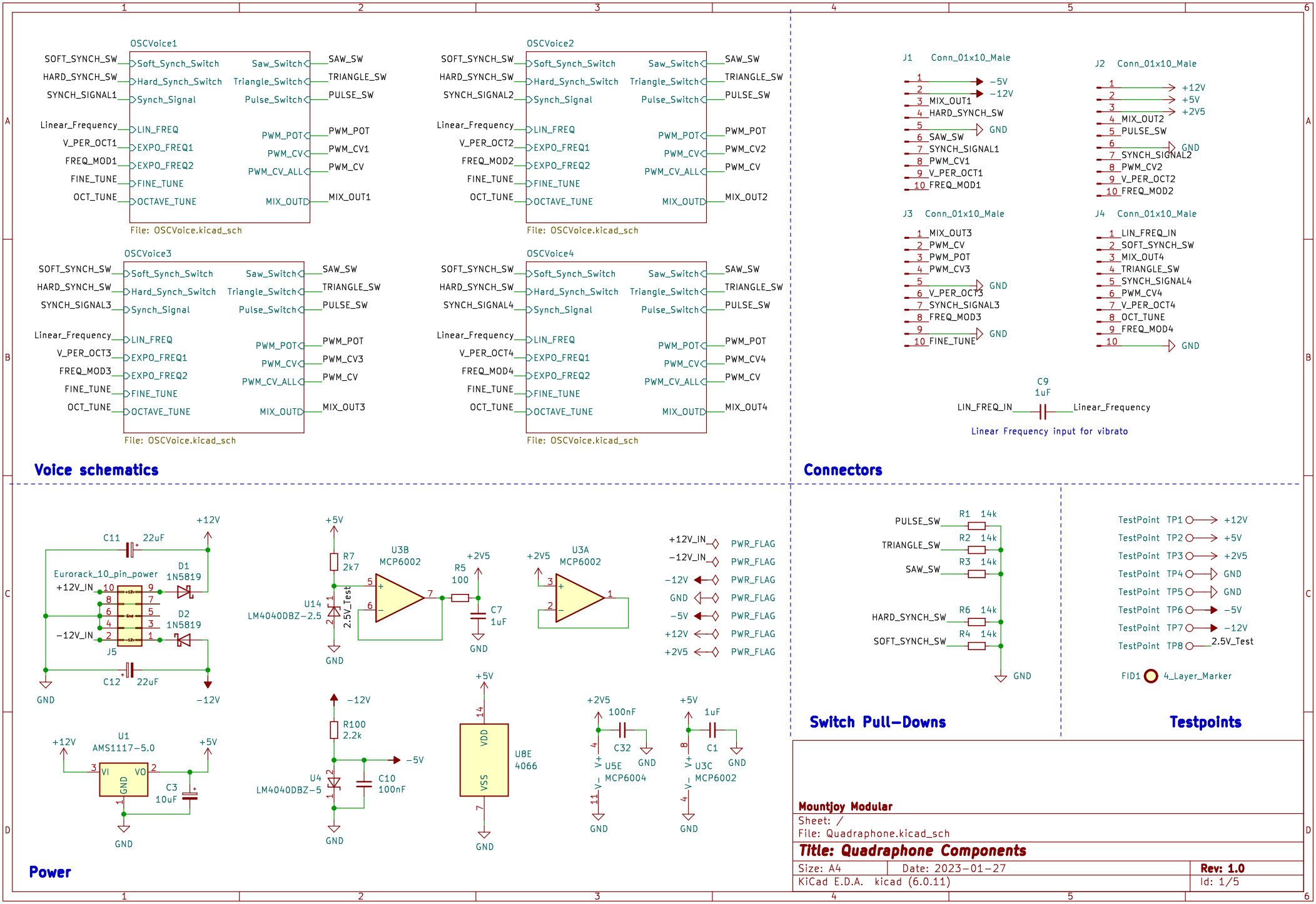
OSCVoice1
SOFT_SYNCH_SW
HARD_SYNCH_SW
SYNCH_SIGNAL1
Linear_Frequency
V_PER_OCT1
FREQ_MOD1
FINE_TUNE
OCT_TUNE
Soft_Synch_Switch
Hard_Synch_Switch
Synch_Signal
LIN_FREQ
EXPO_FREQ1
EXPO_FREQ2
FINE_TUNE
OCTAVE_TUNE
Saw_Switch
Triangle_Switch
Pulse_Switch
PWM_POT
PWM_CV
PWM_CV_ALL
MIX_OUT
SAW_SW
TRIANGLE_SW
PULSE_SW
PWM_POT
PWM_CV1
PWM_CV
MIX_OUT1
File: OSCVoice.kicad_sch
OSCVoice2
SYNCH_SIGNAL2
V_PER_OCT2
FREQ_MOD2
PWM_CV2
MIX_OUT2
OSCVoice3
SYNCH_SIGNAL3
V_PER_OCT3
FREQ_MOD3
PWM_CV3
MIX_OUT3
OSCVoice4
SYNCH_SIGNAL4
V_PER_OCT4
FREQ_MOD4
PWM_CV4
MIX_OUT4
Voice schematics
J1 Conn_01x10_Male
−5V
−12V
MIX_OUT1
HARD_SYNCH_SW
GND
SAW_SW
SYNCH_SIGNAL1
PWM_CV1
V_PER_OCT1
FREQ_MOD1
J2 Conn_01x10_Male
+12V
+5V
+2V5
MIX_OUT2
PULSE_SW
SYNCH_SIGNAL2
PWM_CV2
V_PER_OCT2
FREQ_MOD2
J3 Conn_01x10_Male
MIX_OUT3
PWM_CV
PWM_POT
PWM_CV3
V_PER_OCT3
SYNCH_SIGNAL3
FREQ_MOD3
FINE_TUNE
J4 Conn_01x10_Male
LIN_FREQ_IN
SOFT_SYNCH_SW
MIX_OUT4
TRIANGLE_SW
SYNCH_SIGNAL4
PWM_CV4
V_PER_OCT4
OCT_TUNE
FREQ_MOD4
C9
1uF
LIN_FREQ_IN
Linear_Frequency
Linear Frequency input for vibrato
Connectors
C11 22uF
+12V
Eurorack_10_pin_power
+12V_IN
−12V_IN
D1 1N5819
D2 1N5819
J5
C12 22uF
GND
−12V
+5V
R7 2k7
U3B MCP6002
U14 LM4040DBZ-2.5
2.5V_Test
R5 100
+2V5
C7 1uF
U3A MCP6002
+12V_IN PWR_FLAG
−12V_IN PWR_FLAG
−12V PWR_FLAG
GND PWR_FLAG
−5V PWR_FLAG
+12V PWR_FLAG
+2V5 PWR_FLAG
U1 AMS1117-5.0
VI
VO
GND
C3 10uF
R100 2.2k
U4 LM4040DBZ-5
C10 100nF
−5V
U8E 4066
VDD
VSS
100nF
C32
U5E MCP6004
1uF
C1
U3C MCP6002
V+
V−
Power
PULSE_SW
TRIANGLE_SW
SAW_SW
HARD_SYNCH_SW
SOFT_SYNCH_SW
R1 14k
R2 14k
R3 14k
R6 14k
R4 14k
Switch Pull-Downs
TestPoint TP1 +12V
TestPoint TP2 +5V
TestPoint TP3 +2V5
TestPoint TP4 GND
TestPoint TP5 GND
TestPoint TP6 −5V
TestPoint TP7 −12V
TestPoint TP8 2.5V_Test
FID1 4_Layer_Marker
Testpoints
Mountjoy Modular
Sheet: /
File: Quadraphone.kicad_sch
Title: Quadraphone Components
Size: A4
Date: 2023-01-27
Rev: 1.0
KiCad E.D.A. kicad (6.0.11)
Id: 1/5

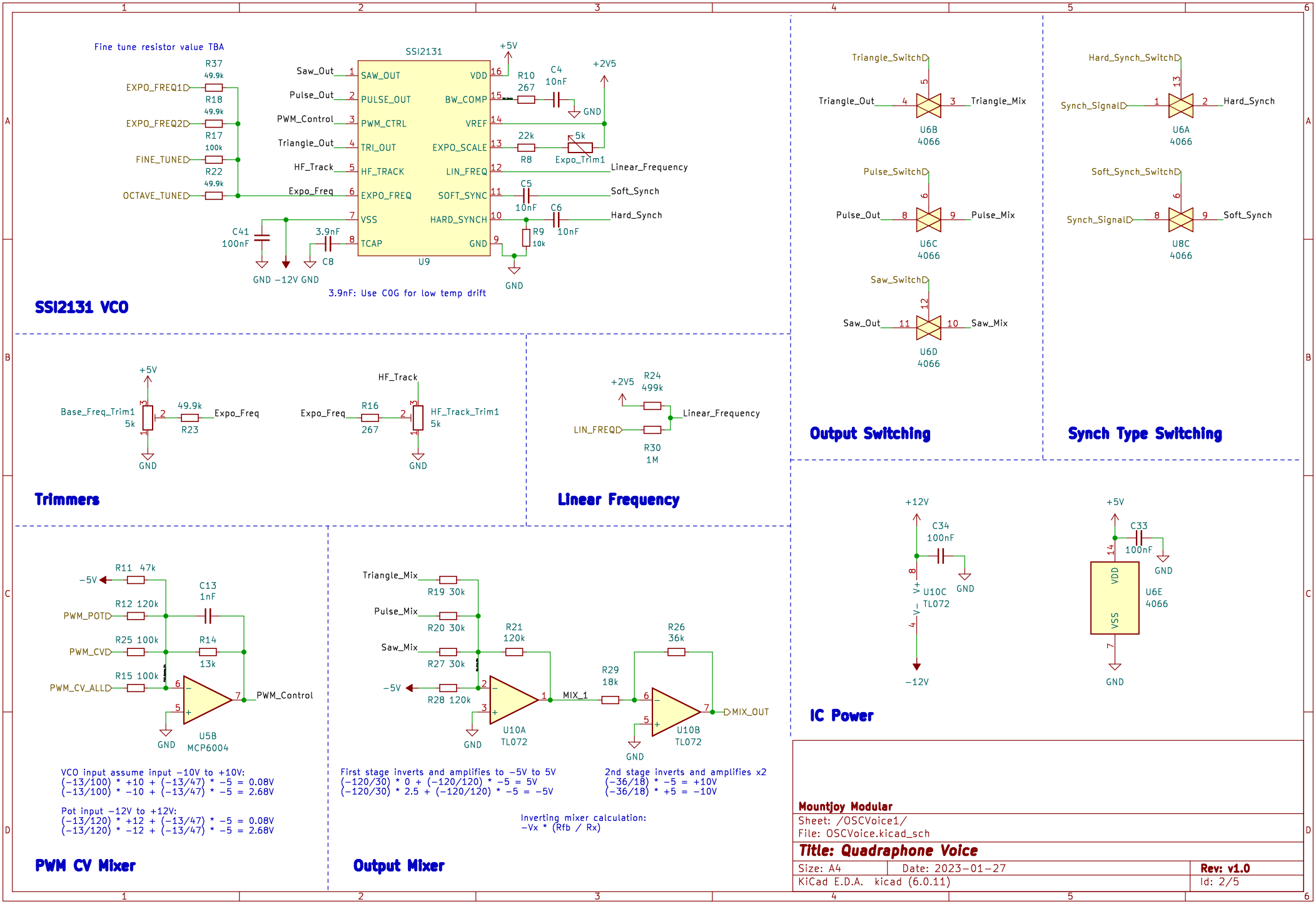
Fine tune resistor value TBA
SSI2131
U9
EXPO_FREQ1
EXPO_FREQ2
FINE_TUNE
OCTAVE_TUNE
R37 49.9k
R18 49.9k
R17 100k
R22 49.9k
Saw_Out
Pulse_Out
PWM_Control
Triangle_Out
HF_Track
Expo_Freq
SAW_OUT
PULSE_OUT
PWM_CTRL
TRI_OUT
HF_TRACK
EXPO_FREQ
VSS
TCAP
VDD
BW_COMP
VREF
EXPO_SCALE
LIN_FREQ
SOFT_SYNC
HARD_SYNCH
GND
+5V
R10 267
C4 10nF
+2V5
R8 22k
5k Expo_Trim1
Linear_Frequency
C5 10nF
Soft_Synch
C6 10nF
Hard_Synch
R9 10k
C41 100nF
3.9nF
C8
GND −12V GND
3.9nF: Use C0G for low temp drift
SSI2131 VCO
+5V
Base_Freq_Trim1 5k
49.9k R23
Expo_Freq
GND
HF_Track
Expo_Freq
R16 267
HF_Track_Trim1 5k
Trimmers
+2V5
R24 499k
Linear_Frequency
LIN_FREQ
R30 1M
Linear Frequency
Triangle_Switch
Triangle_Out
Triangle_Mix
U6B 4066
Pulse_Switch
Pulse_Out
Pulse_Mix
U6C 4066
Saw_Switch
Saw_Out
Saw_Mix
U6D 4066
Output Switching
Hard_Synch_Switch
Synch_Signal
Hard_Synch
U6A 4066
Soft_Synch_Switch
Synch_Signal
Soft_Synch
U8C 4066
Synch Type Switching
−5V
R11 47k
PWM_POT
R12 120k
C13 1nF
PWM_CV
R25 100k
R14 13k
PWM_CV_ALL
R15 100k
PWM_Control
GND
U5B MCP6004
VCO input assume input −10V to +10V:
(−13/100) * +10 + (−13/47) * −5 = 0.08V
(−13/100) * −10 + (−13/47) * −5 = 2.68V
Pot input −12V to +12V:
(−13/120) * +12 + (−13/47) * −5 = 0.08V
(−13/120) * −12 + (−13/47) * −5 = 2.68V
PWM CV Mixer
Triangle_Mix
R19 30k
Pulse_Mix
R20 30k
Saw_Mix
R27 30k
−5V
R28 120k
R21 120k
U10A TL072
MIX_1
R29 18k
R26 36k
U10B TL072
MIX_OUT
First stage inverts and amplifies to −5V to 5V
(−120/30) * 0 + (−120/120) * −5 = 5V
(−120/30) * 2.5 + (−120/120) * −5 = −5V
2nd stage inverts and amplifies x2
(−36/18) * −5 = +10V
(−36/18) * +5 = −10V
Inverting mixer calculation:
−Vx * (Rfb / Rx)
Output Mixer
+12V
C34 100nF
U10C TL072
−12V
+5V
C33 100nF
U6E 4066
VDD
VSS
IC Power
Mountjoy Modular
Sheet: /OSCVoice1/
File: OSCVoice.kicad_sch
Title: Quadraphone Voice
Size: A4
Date: 2023-01-27
Rev: v1.0
KiCad E.D.A. kicad (6.0.11)
Id: 2/5

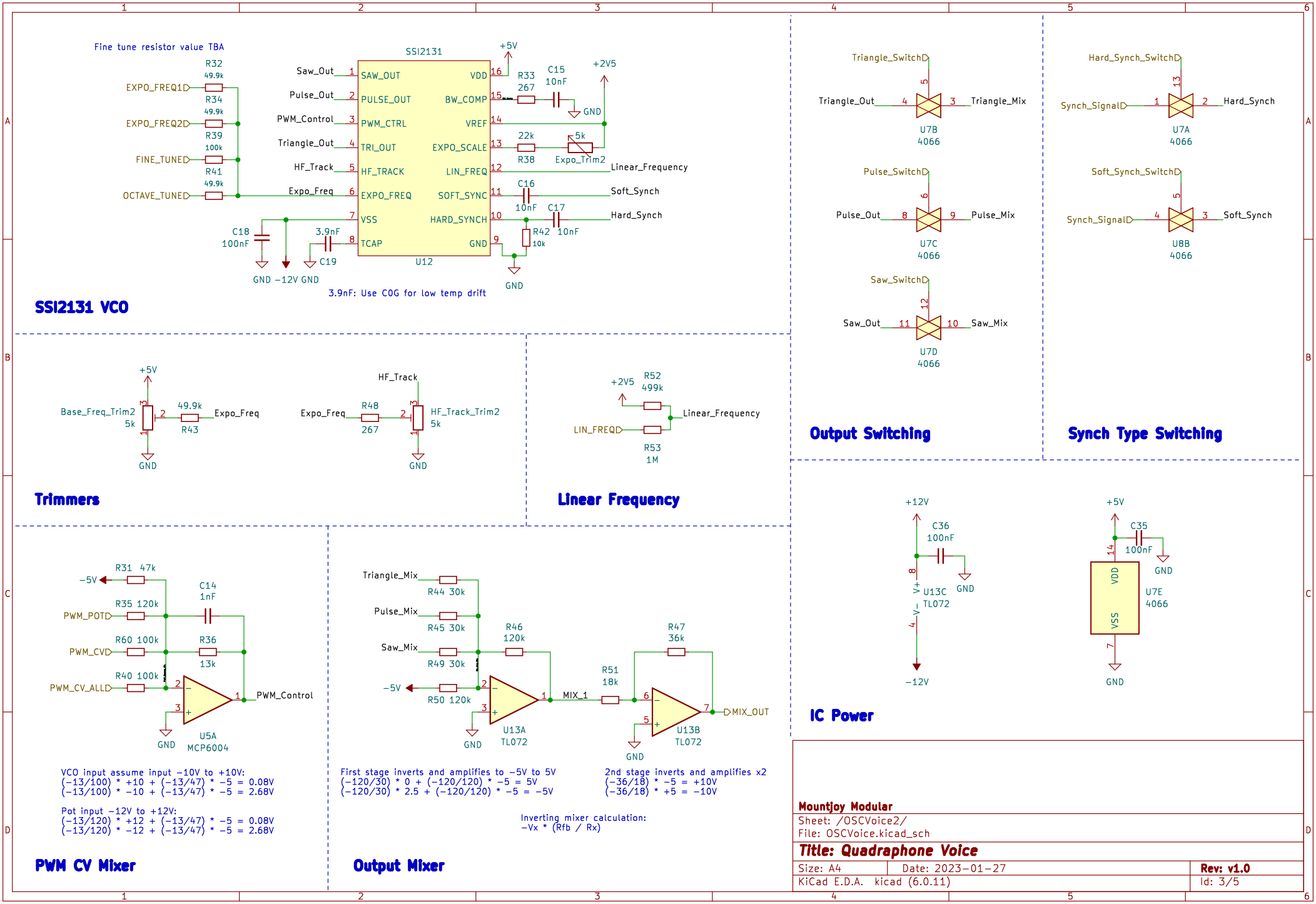
Fine tune resistor value TBA
SSI2131
EXPO_FREQ1
EXPO_FREQ2
FINE_TUNE
OCTAVE_TUNE
R32 49.9k
R34 49.9k
R39 100k
R41 49.9k
Saw_Out
Pulse_Out
PWM_Control
Triangle_Out
HF_Track
Expo_Freq
SAW_OUT
PULSE_OUT
PWM_CTRL
TRI_OUT
HF_TRACK
EXPO_FREQ
VSS
TCAP
VDD
BW_COMP
VREF
EXPO_SCALE
LIN_FREQ
SOFT_SYNC
HARD_SYNCH
GND
U12
+5V
R33 267
C15 10nF
+2V5
22k R38
5k Expo_Trim2
Linear_Frequency
C16 10nF
Soft_Synch
C17 10nF
Hard_Synch
R42 10k
C18 100nF
3.9nF C19
GND −12V GND
3.9nF: Use C0G for low temp drift
SSI2131 VCO
Triangle_Switch
Triangle_Out
Triangle_Mix
U7B 4066
Pulse_Switch
Pulse_Out
Pulse_Mix
U7C 4066
Saw_Switch
Saw_Out
Saw_Mix
U7D 4066
Output Switching
Hard_Synch_Switch
Synch_Signal
Hard_Synch
U7A 4066
Soft_Synch_Switch
Soft_Synch
U8B 4066
Synch Type Switching
Base_Freq_Trim2 5k
49.9k R43
Expo_Freq
HF_Track
R48 267
HF_Track_Trim2 5k
Trimmers
+2V5
R52 499k
LIN_FREQ
R53 1M
Linear_Frequency
+12V
C36 100nF
U13C TL072
−12V
+5V
C35 100nF
U7E 4066
VDD
VSS
R31 47k
−5V
C14 1nF
PWM_POT
R35 120k
PWM_CV
R60 100k
R36 13k
PWM_CV_ALL
R40 100k
U5A MCP6004
PWM_Control
VCO input assume input −10V to +10V:
(−13/100) * +10 + (−13/47) * −5 = 0.08V
(−13/100) * −10 + (−13/47) * −5 = 2.68V
Pot input −12V to +12V:
(−13/120) * +12 + (−13/47) * −5 = 0.08V
(−13/120) * −12 + (−13/47) * −5 = 2.68V
PWM CV Mixer
Triangle_Mix
R44 30k
Pulse_Mix
R45 30k
Saw_Mix
R49 30k
−5V
R50 120k
R46 120k
U13A TL072
MIX_1
R51 18k
R47 36k
U13B TL072
MIX_OUT
First stage inverts and amplifies to −5V to 5V
(−120/30) * 0 + (−120/120) * −5 = 5V
(−120/30) * 2.5 + (−120/120) * −5 = −5V
2nd stage inverts and amplifies x2
(−36/18) * −5 = +10V
(−36/18) * +5 = −10V
Inverting mixer calculation:
−Vx * (Rfb / Rx)
Output Mixer
IC Power
Mountjoy Modular
Sheet: /OSCVoice2/
File: OSCVoice.kicad_sch
Title: Quadraphone Voice
Size: A4
Date: 2023-01-27
Rev: v1.0
KiCad E.D.A. kicad (6.0.11)
Id: 3/5

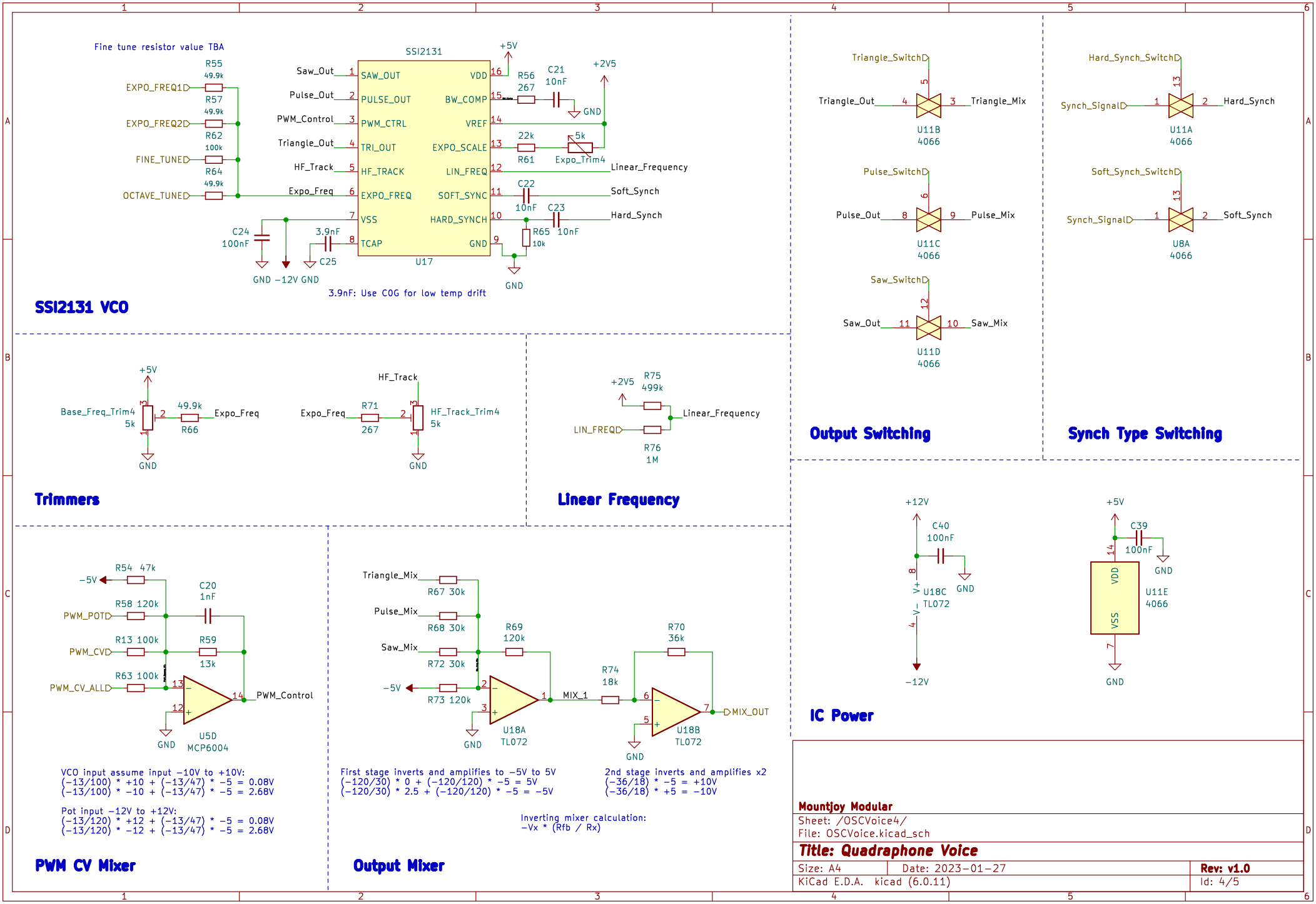
Fine tune resistor value TBA
SSI2131
U17
SAW_OUT
PULSE_OUT
PWM_CTRL
TRI_OUT
HF_TRACK
EXPO_FREQ
VSS
TCAP
VDD
BW_COMP
VREF
EXPO_SCALE
LIN_FREQ
SOFT_SYNC
HARD_SYNCH
GND
Saw_Out
Pulse_Out
PWM_Control
Triangle_Out
HF_Track
Expo_Freq
EXPO_FREQ1
EXPO_FREQ2
FINE_TUNE
OCTAVE_TUNE
R55 49.9k
R57 49.9k
R62 100k
R64 49.9k
+5V
+2V5
R56 267
C21 10nF
R61 22k
Expo_Trim4 5k
Linear_Frequency
C22 10nF
Soft_Synch
C23 10nF
Hard_Synch
R65 10k
C24 100nF
3.9nF
C25
GND −12V GND
3.9nF: Use C0G for low temp drift
SSI2131 VCO
Triangle_Switch
Triangle_Out
Triangle_Mix
U11B 4066
Pulse_Switch
Pulse_Out
Pulse_Mix
U11C 4066
Saw_Switch
Saw_Out
Saw_Mix
U11D 4066
Output Switching
Hard_Synch_Switch
Synch_Signal
Hard_Synch
U11A 4066
Soft_Synch_Switch
Soft_Synch
U8A 4066
Synch Type Switching
Base_Freq_Trim4 5k
49.9k R66
Expo_Freq
HF_Track
R71 267
HF_Track_Trim4 5k
Trimmers
+2V5
R75 499k
LIN_FREQ
R76 1M
Linear_Frequency
+12V
C40 100nF
U18C TL072
−12V
+5V
C39 100nF
U11E 4066
VDD
VSS
IC Power
−5V
R54 47k
R58 120k
PWM_POT
C20 1nF
R13 100k
PWM_CV
R59 13k
R63 100k
PWM_CV_ALL
PWM_Control
U5D MCP6004
VCO input assume input −10V to +10V:
(−13/100) * +10 + (−13/47) * −5 = 0.08V
(−13/100) * −10 + (−13/47) * −5 = 2.68V
Pot input −12V to +12V:
(−13/120) * +12 + (−13/47) * −5 = 0.08V
(−13/120) * −12 + (−13/47) * −5 = 2.68V
PWM CV Mixer
Triangle_Mix
R67 30k
Pulse_Mix
R68 30k
Saw_Mix
R72 30k
R69 120k
R73 120k
U18A TL072
MIX_1
R74 18k
R70 36k
U18B TL072
MIX_OUT
First stage inverts and amplifies to −5V to 5V
(−120/30) * 0 + (−120/120) * −5 = 5V
(−120/30) * 2.5 + (−120/120) * −5 = −5V
2nd stage inverts and amplifies x2
(−36/18) * −5 = +10V
(−36/18) * +5 = −10V
Inverting mixer calculation:
−Vx * (Rfb / Rx)
Output Mixer
Mountjoy Modular
Sheet: /OSCVoice4/
File: OSCVoice.kicad_sch
Title: Quadraphone Voice
Size: A4
Date: 2023-01-27
Rev: v1.0
KiCad E.D.A. kicad (6.0.11)
Id: 4/5

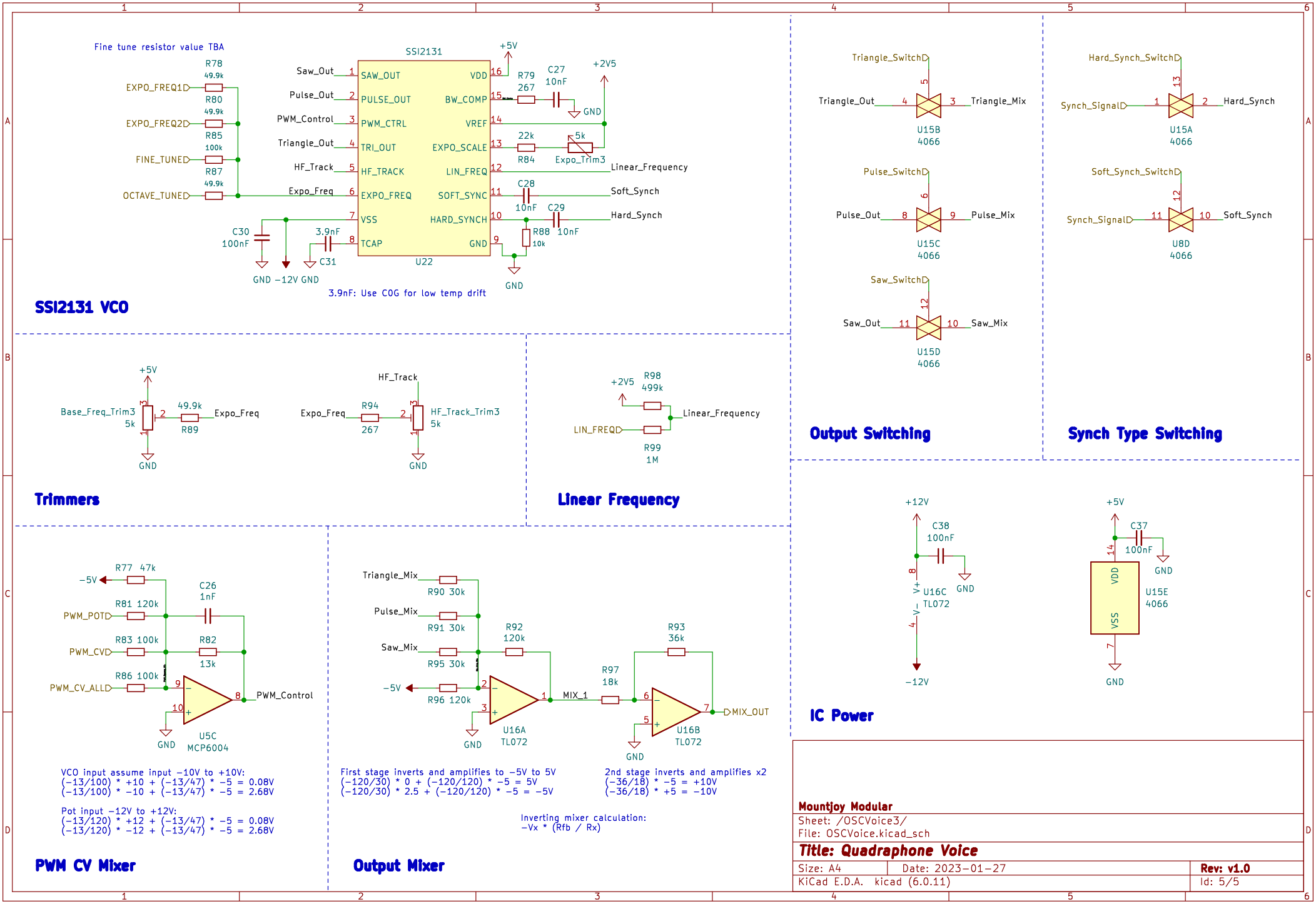
Fine tune resistor value TBA
SSI2131
R78 49.9k
R80 49.9k
R85 100k
R87 49.9k
EXPO_FREQ1
EXPO_FREQ2
FINE_TUNE
OCTAVE_TUNE
Saw_Out
Pulse_Out
PWM_Control
Triangle_Out
HF_Track
Expo_Freq
SAW_OUT
PULSE_OUT
PWM_CTRL
TRI_OUT
HF_TRACK
EXPO_FREQ
VSS
TCAP
VDD
BW_COMP
VREF
EXPO_SCALE
LIN_FREQ
SOFT_SYNC
HARD_SYNCH
GND
U22
+5V
R79 267
C27 10nF
+2V5
22k R84
5k Expo_Trim3
Linear_Frequency
C28 10nF
Soft_Synch
C29 10nF
Hard_Synch
R88 10k
C30 100nF
3.9nF C31
GND −12V GND
3.9nF: Use C0G for low temp drift
SSI2131 VCO
Triangle_Switch
Triangle_Out
Triangle_Mix
U15B 4066
Pulse_Switch
Pulse_Out
Pulse_Mix
U15C 4066
Saw_Switch
Saw_Out
Saw_Mix
U15D 4066
Output Switching
Hard_Synch_Switch
Synch_Signal
Hard_Synch
U15A 4066
Soft_Synch_Switch
Soft_Synch
U8D 4066
Synch Type Switching
Base_Freq_Trim3 5k
49.9k R89
Expo_Freq
HF_Track
R94 267
HF_Track_Trim3 5k
Trimmers
+2V5
R98 499k
LIN_FREQ
R99 1M
Linear_Frequency
Linear Frequency
+12V
C38 100nF
U16C TL072
−12V
+5V
C37 100nF
U15E 4066
VDD
VSS
IC Power
R77 47k
−5V
C26 1nF
R81 120k
PWM_POT
R83 100k
PWM_CV
R82 13k
R86 100k
PWM_CV_ALL
PWM_Control
U5C MCP6004
VCO input assume input −10V to +10V:
(−13/100) * +10 + (−13/47) * −5 = 0.08V
(−13/100) * −10 + (−13/47) * −5 = 2.68V
Pot input −12V to +12V:
(−13/120) * +12 + (−13/47) * −5 = 0.08V
(−13/120) * −12 + (−13/47) * −5 = 2.68V
PWM CV Mixer
Triangle_Mix
R90 30k
Pulse_Mix
R91 30k
Saw_Mix
R95 30k
−5V
R96 120k
R92 120k
U16A TL072
MIX_1
R97 18k
R93 36k
U16B TL072
MIX_OUT
First stage inverts and amplifies to −5V to 5V
(−120/30) * 0 + (−120/120) * −5 = 5V
(−120/30) * 2.5 + (−120/120) * −5 = −5V
2nd stage inverts and amplifies x2
(−36/18) * −5 = +10V
(−36/18) * +5 = −10V
Inverting mixer calculation:
−Vx * (Rfb / Rx)
Output Mixer
Mountjoy Modular
Sheet: /OSCVoice3/
File: OSCVoice.kicad_sch
Title: Quadraphone Voice
Size: A4
Date: 2023-01-27
Rev: v1.0
KiCad E.D.A. kicad (6.0.11)
Id: 5/5