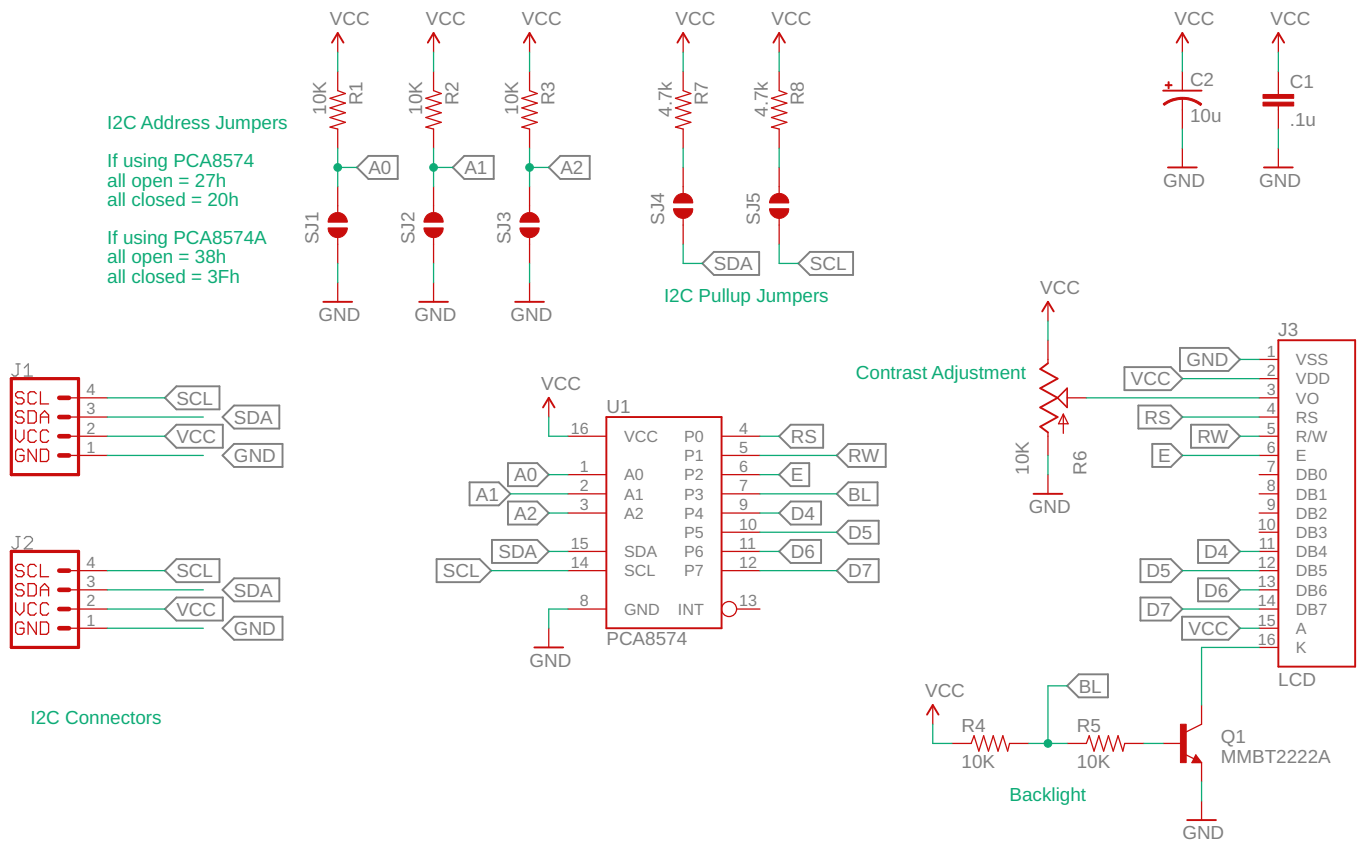

Released under the Creative Commons
Attribution Share-Alike 4.0 License
http://creativecommons.org/licenses/by-sa/4.0

open hardware

DCITY
http://dcity.org

Title: I2C LCD Backpack

Drawn by: Gary Muhonen

REV: E

Date: 9/6/2020

Sheet: 1/1