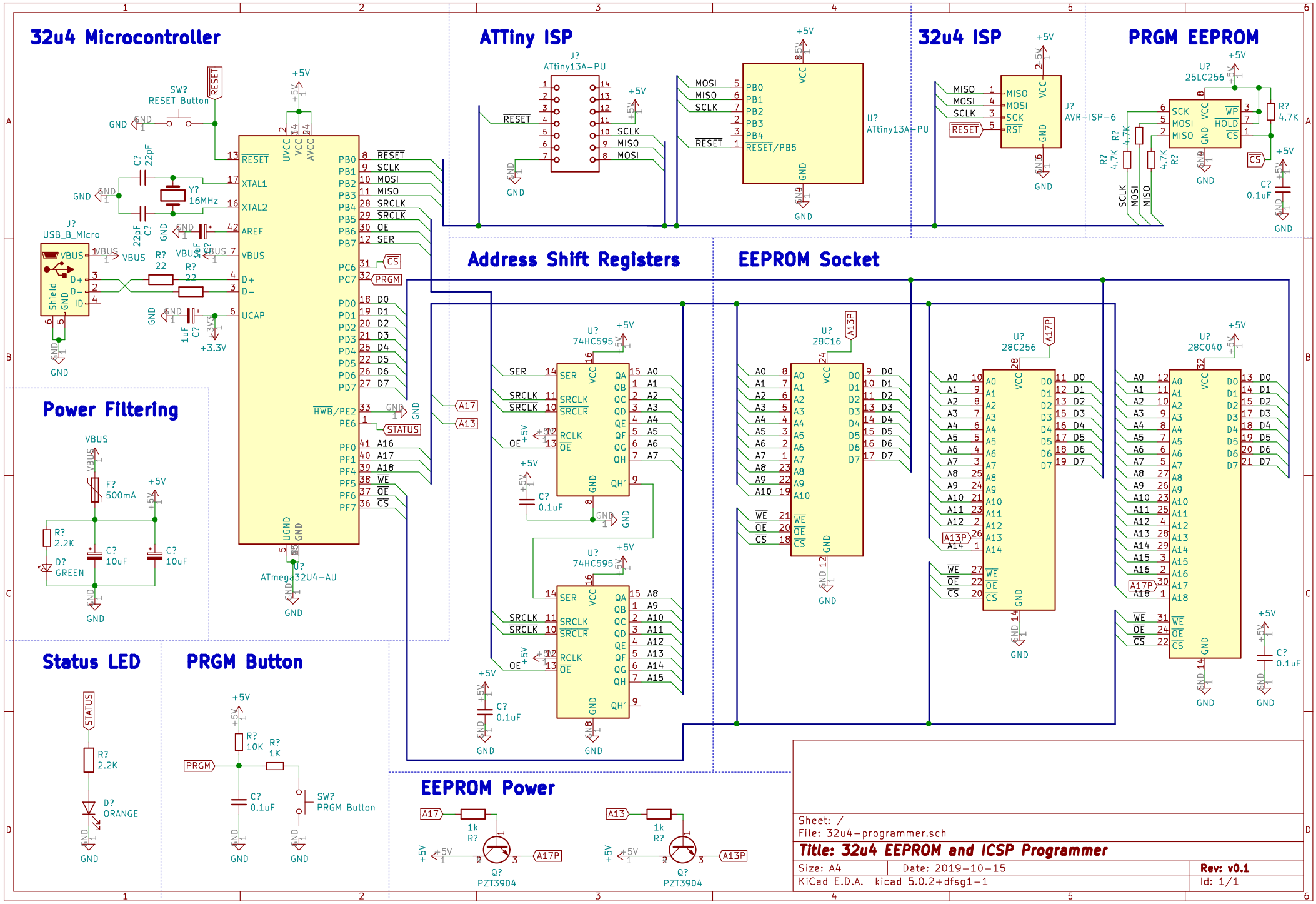
32u4 Microcontroller
ATTiny ISP
32u4 ISP
PRGM EEPROM
Address Shift Registers
EEPROM Socket
Power Filtering
Status LED
PRGM Button
EEPROM Power
SW? RESET Button
J? USB_B_Micro
Y? 16MHz
U? ATmega32U4-AU
J? ATtiny13A-PU
U? ATtiny13A-PU
J? AVR-ISP-6
U? 25LC256
U? 74HC595
U? 28C16
U? 28C256
U? 28C040
F? 500mA
D? GREEN
D? ORANGE
SW? PRGM Button
Q? PZT3904
Sheet: /
File: 32u4-programmer.sch
Title: 32u4 EEPROM and ICSP Programmer
Size: A4
Date: 2019-10-15
Rev: v0.1
KiCad E.D.A. kicad 5.0.2+dfsg1-1
Id: 1/1