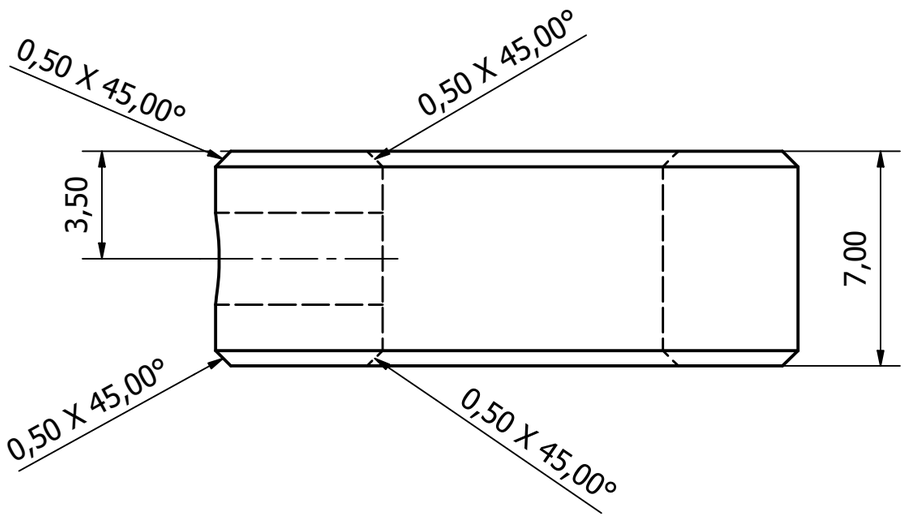

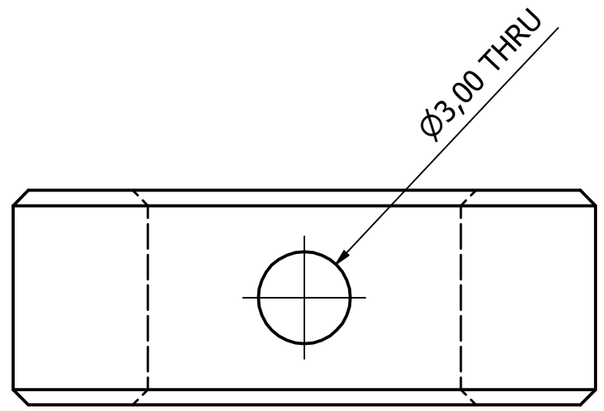

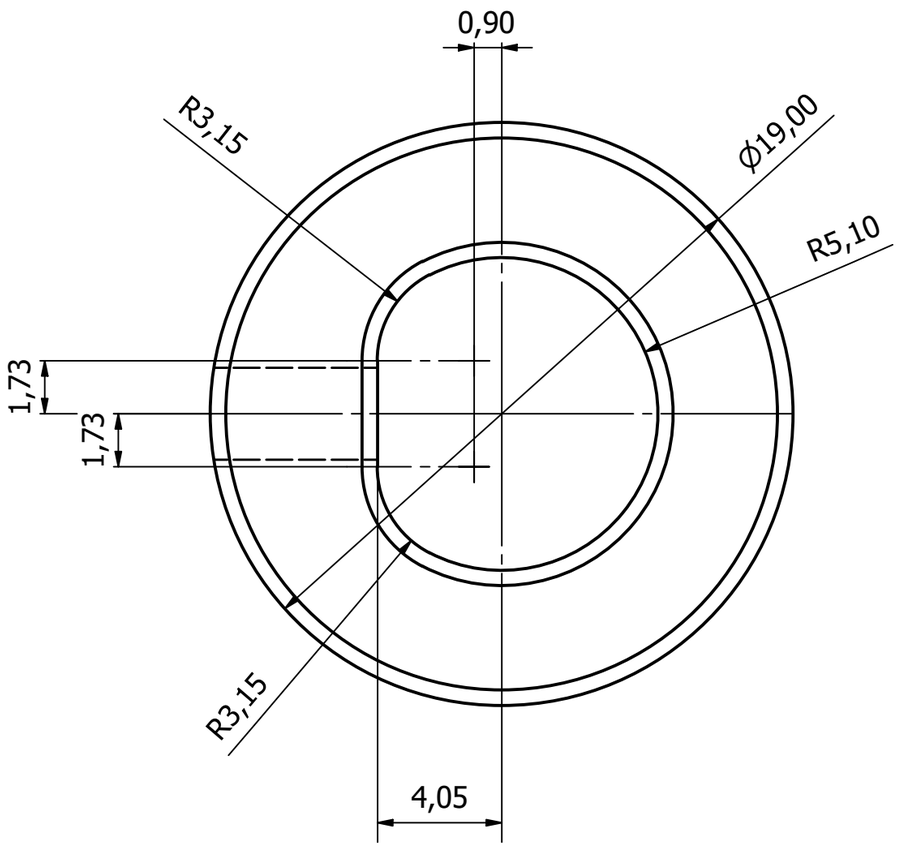

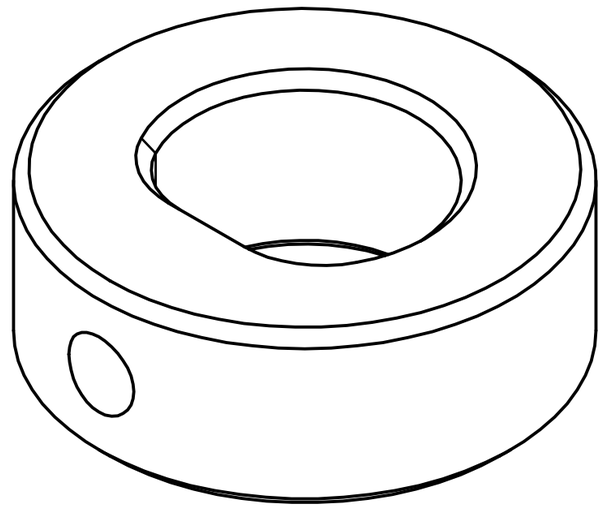

Designed by	Checked by	Approved by	Date		Date 4/18/2016	
general tolerance ISO 2768 fine all dimensions in mm				Spacer - Scale 5:1		
				Spacer	Edition	Sheet 1 / 1