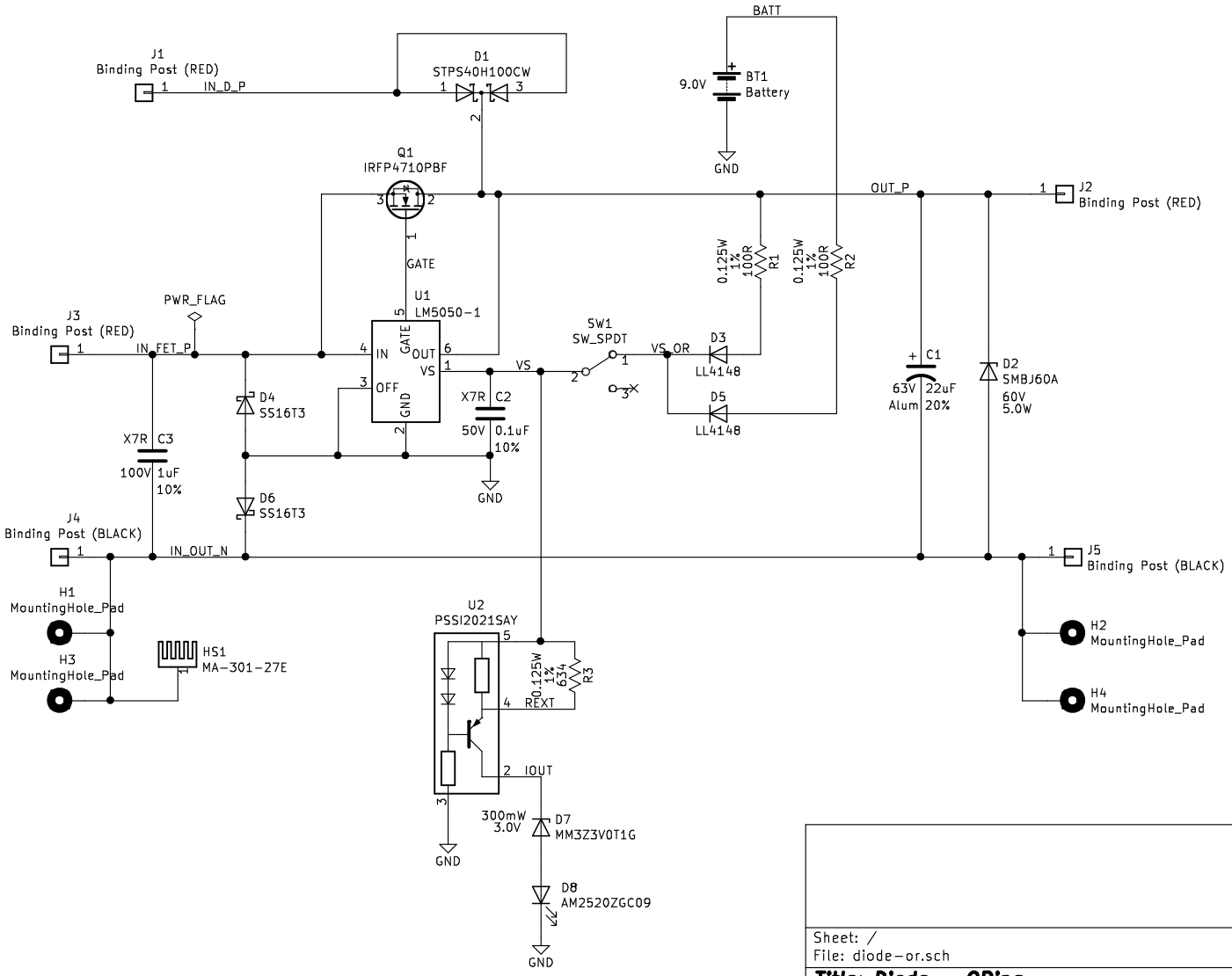

Sheet: /
File: diode-or.sch

Title: Diode - ORing

Size: A4	Date: 2020-01-07	**Rev: v1.0.0**
KiCad E.D.A. kicad (5.1.5-1-g2528d3844)		Id: 1/1