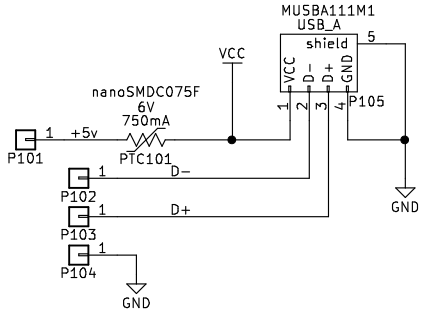

Sheet: /
File: usbabrkout.sch

Title: USB-A panel mount breakout

Size: A4	Date: 2018-04-23	**Rev: v1.0.0**
KiCad E.D.A. kicad (5.1.5)		Id: 1/1