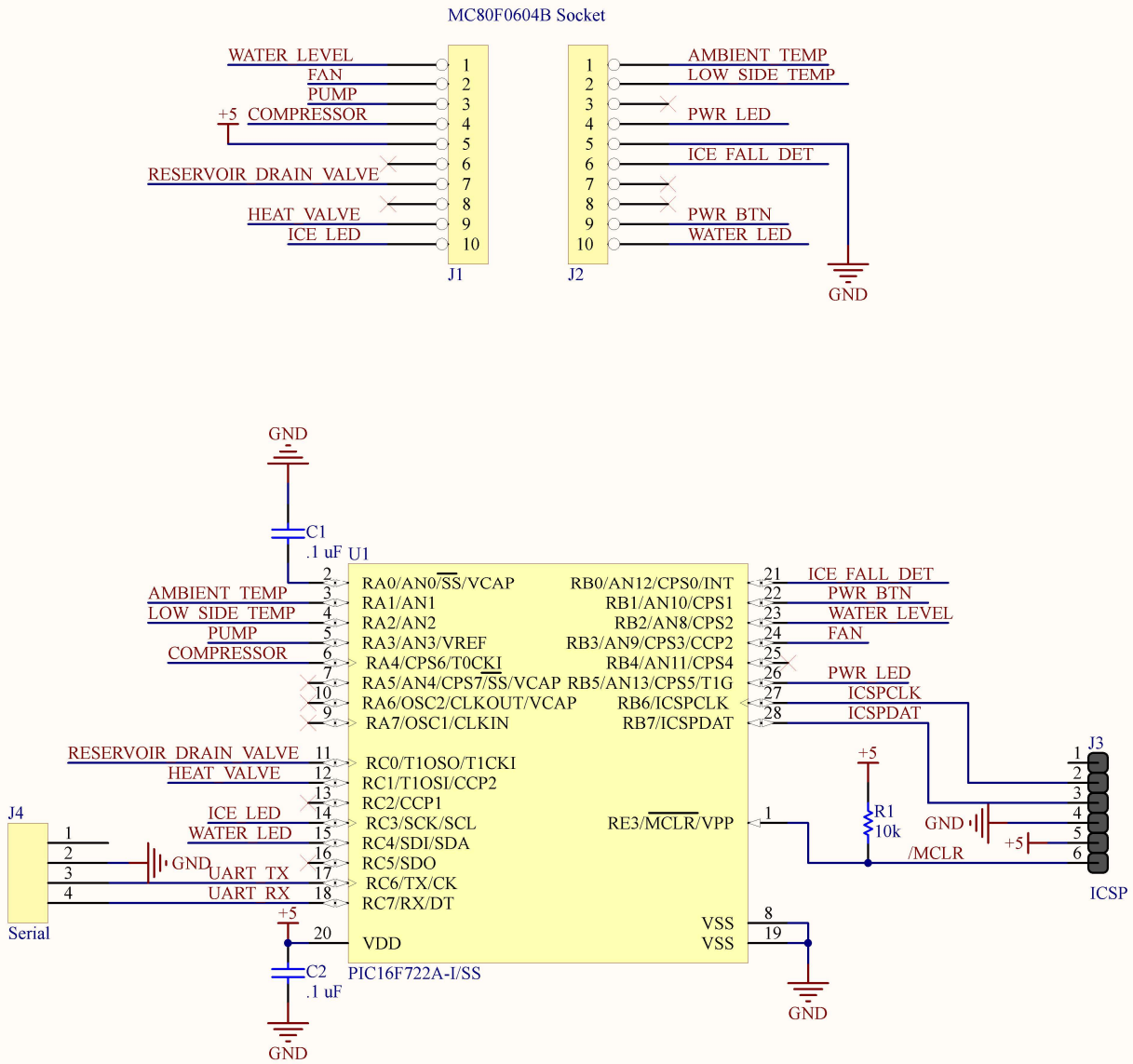

Title		
Size A	Number	Revision
Date: 2/14/2016		Sheet of
File: Sheet1.SchDoc		Drawn By: