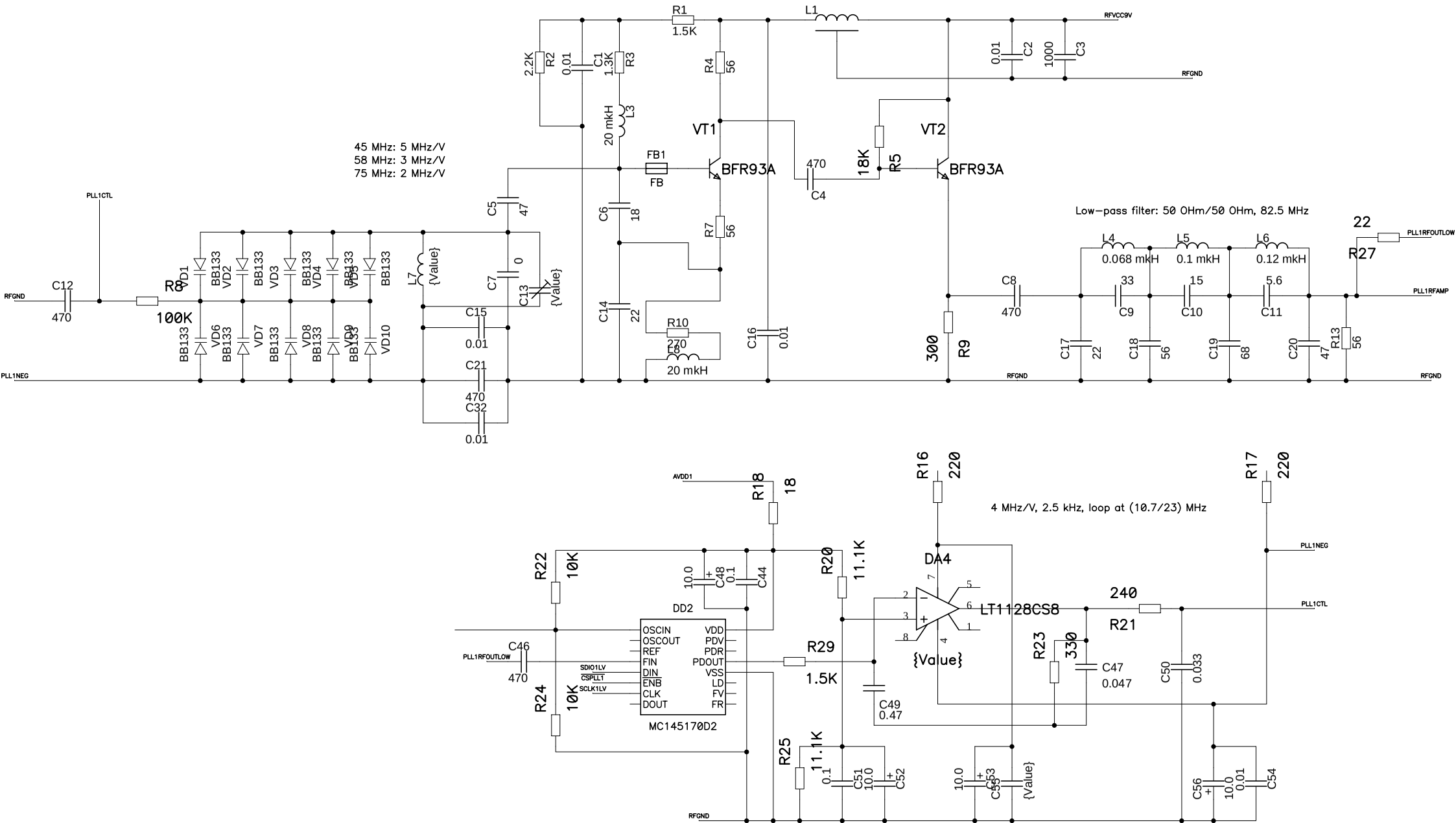
45 MHz: 5 MHz/V
58 MHz: 3 MHz/V
75 MHz: 2 MHz/V
Low-pass filter: 50 OHm/50 OHm, 82.5 MHz
4 MHz/V, 2.5 kHz, loop at (10.7/23) MHz
RFVCC9V
RFGND
PLL1CTL
PLL1NEG
PLL1RFOUTLOW
PLL1RFAMP
AVDD1
VT1
VT2
BFR93A
DA4
LT1128CS8
DD2
MC145170D2
OSCIN
OSCOUT
REF
FIN
DIN
ENB
CLK
DOUT
VDD
PDV
PDR
PDOUT
VSS
LD
FV
FR
SDIO1LV
CSPLL1
SCLK1LV
R8
100K
R1
1.5K
R2
2.2K
R3
1.3K
R4
56
R5
18K
R7
56
R9
300
R10
270
R13
56
R16
220
R17
220
R18
18
R20
11.1K
R21
240
R22
10K
R23
330
R24
10K
R25
11.1K
R27
22
R29
1.5K
L1
L3
20 mkH
L4
0.068 mkH
L5
0.1 mkH
L6
0.12 mkH
L7
{Value}
FB1
FB
C1
C2
C3
C4
C5
C6
C7
C8
C9
C10
C11
C12
C13
C14
C15
C16
C17
C18
C19
C20
C21
C32
C44
C46
C47
C48
C49
C50
C51
C52
C53
C54
C55
C56
VD1
VD2
VD3
VD4
VD5
VD6
VD7
VD8
VD9
VD10
BB133