AUO

Display Specification for B133EW07 V0

13.3” Wide (1280x800) TFT-LCD

LED Backlight with High Color Gamut

Revision History

DATE	REV #	Section #	CHANGE DESCRIPTION

Table of Content

Revision History 2

1. General Description 6

2. ORDER OF PRECEDENCE OF DOCUMENTATION AUTHORITY 7

2.1. The Purchase Order 7

2.2. This Specification 7

2.3. Reference Documents 7

3. PHYSICAL DESCRIPTION 8

4. MECHANICAL REQUIREMENTS 9

5. ELECTRICAL REQUIREMENTS 11

5.1. *Block Diagram* 11

5.2. Display PCB Schematics 12

5.3. Display PCB Layout 13

5.4. Display Subsystem (PCB & TFT Panel) 13

5.4.1. Pin-Out (Single Channel LVDS Interface) 13

5.4.2. Connector Diagram 14

5.4.3. Color Input Data Reference 15

5.4.4. EDID Interface (Per Vesa EDID 1.x standard requirements) 17

5.4.5. Electrical Ratings 20

5.4.6. Signal Timing 22

5.4.6.1. Signal Impedance 22

5.4.6.2. Timing Data 22

5.4.6.3. Video Timing Diagram 23

5.4.7. Power Measurements (W/O backlight) 25

5.4.8. Power on-off sequence 26

5.4.9. Vcc Dip Condition 26

5.5. Near-Field Noise 27

5.6. Backlight Subsystem 27

6. OPTICAL REQUIREMENTS 30

6.1. Optical Specifications 30

6.2. Measuring Conditions 31

6.3. Definition 33
6.3.1. Center Point Luminance 33
6.3.2. Average Luminance 33
6.3.3. Luminance Uniformity 33
6.3.3.1. Global Luminance Uniformity: 33
6.3.3.2. Worst Neighbor Luminance Uniformity (The 4 points that are closest to the test point) 34
6.3.4. Contrast Ratio 34
6.3.5. White Color Uniformity 34
6.3.5.1. Panel to Panel White Color Uniformity 34
6.3.5.2. Max Color Difference with respect to the center within a panel 35
6.3.5.3. Max Color Difference between any two points within the panel 35
6.3.5.4. Max Color Difference between two neighbors 35
6.3.6. RGB Color Chromaticity 35
6.3.7. Viewing Angle 35
6.3.8. Gray Scale Inversion 36
6.3.9. Response Time 36
6.3.9.1. On and Off Response Time 36
6.3.9.2. Gray to Gray Response Time 36
6.3.10. Gray Scale Linearity or Gamma Value 37
6.3.11. Flicker 37
6.3.12. Cross-talk 38
6.4. Hot Spot Specifications: 38
7. ENVIRONMENTAL 40
7.1. Shock and Vibration 40
7.2. Temperature and Humidity 41
7.2.1. General Performance Requirements 41
7.2.2. Non-operational Testing 42
7.2.2.1. Low Temperature 42
7.2.2.2. High Temperature 42
7.2.2.3. High Temperature and High Humidity 42
7.2.2.4. Thermal Shock 42
7.2.3. Operational Testing 42

7.2.3.1. Low Temperature 42
7.2.3.2. High Temperature 42
7.2.3.3. High Temperature and High Humidity 42
7.2.3.4. Four Corner Test (72 hrs – operating) 42
7.3. Altitude 43
8. RELIABILITY 43
8.1. Resistance to Normal Abuse 43
8.1.1. Torsion Test 43
8.1.2. Test Conditions: 43
8.1.3. Test Set-up 44
8.1.4. Static Load Deflection and Breakage 44
8.2. Electrostatic Discharge (ESD) 44
8.3. MTBF 44
8.4. LCD Glass Strength 45
9. COSMETIC REQUIREMENTS 50
10. REGULATORY 51
10.1. Product Safety (Environmental, Ergonomics, Safety and Health) 51
10.2. RoHS Compliance and other Substance Regulations 51
10.3 Halogen Free 51
10.3. Environmental Markings and Recycling 51
10.4. Product Safety 52
10.5. Ergonomics 52
10.6. Electromagnetic Compatibility (EMC) 52
11 FACTORY/SERVICE REQUIREMENTS 54
12 REFERENCE DOCUMENTS 55

1. General Description

This document establishes the requirements for the display device for the B133EW07 V0

Category	***Parameter***	***Specification***
General	Manufacturer	AUO
	Mfg. P/N	B133EW07 V0
	LCD TYPE	Normally-White, Transmissive TN TFT-LCD
	Diagonal	13.282” (33.74cm)
	Pixel Format	1280 (RGB stripe, H) x 800 (V)
	Pixel Pitch	0.2235(V) x 3x0.0745(H) mm
	Color Depth	18-bits (6R, 6G, 6B), 262144 colors
	Pooling requirement	Rigid Post Spacer with strong pooling resistance
	Packaging	Protective film on front polarizer. Displays packaged and air-tight sealed in anti-static bags.
Electrical	Interface	3.3V single-channel LVDS
	Power Consumption	4.36 W @ Black (typical, the logic plus the backlight @94% duty cycle @23mA, 3.3V forward bias voltage)
Optical	Luminance	275 nits @ 94% duty cycle @23 mA (typical center)
	White LED Backlight	6 strings, 9 LED per string. Nichia NNSW208
	Hot Spots	No visible hot spot at any angle
	Viewing Direction	6:00 for worst dark inversion (pcb driver on the bottom)
	Contrast	500 typical
	Top Polarizer	Glossy Surface, 3H Hard Coating, LT4/ARC7 AR coating
	Diffuser Sheet	Tsujiden D153GS (top) & Tsujiden D120 (Bottom)
	BEF Sheet	2 X BEF2-G2 MR (Halogen free)
	Reflector	E6SR or equivalent (sulfur free)
	LGP	PMMA
Mechanical	Active Area	286.08 mm (H) x 178.80 mm (V)

	Minimum Viewing Area	288.08 mm (H) x 180.80 mm (V)
	Module Outline Size	297.150 mm (H) x 192.150 mm (V)
	Connector	IPEX 20474-030E-12
	Mating Connector	IPEX 20472-030T-10
	Weight	300 grams typical
Environmental	Operating Temperature	0°C ~ +50°C
	Storage Temperature	-25°C ~ +65°C
Pre-Aging	Before shipment	Minimum 2 hours at 50°C, panel on

2. ORDER OF PRECEDENCE OF DOCUMENTATION AUTHORITY

In the case of any conflict in any specification related to these parts, this order of precedence of authority shall apply:

2.1. The Purchase Order

2.2. This Specification

2.3. Reference Documents

3. PHYSICAL DESCRIPTION

3.1. Display Mode

Normally White, Transmissive, Twisted Nematic Liquid Crystal Displays

3.2. Pixel Configuration

RGB Vertical Stripe

3.3. Pixel Pitch

0.2235 mm x 0.2235 mm

3.4. Resolution

1280 (RGB stripe, H) x 800 (V)

3.5. Aperture Ratio

Minimum > 50%

3.6. Optimum Viewing Cone

6 o'clock worst dark inversion direction (PCB on the bottom)

3.7. Interface & Driving Scheme

3.3V single-channel LVDS (Flat Link) interface, requiring Hsync and Vsync signals, along with DE (Data Enable) mode, 2-dot inversion

3.8. Front Surface Treatment

Low-reflection gloss surface, ~1% Reflectance, ≥3H hardness (Sumitomo LT4, or Nitto Denko ARC7)

3.9 Environmental Requirements:

Any homogeneous component must meet Halogen-Free Specification, 069-1857.

刪除:

4. MECHANICAL REQUIREMENTS

4.1. Dimensions and Tolerances

The LCD module outline is described in the following table.

Dimension	Min	Typ	Max	Unit
Horizontal (H)	296.85	297.15	297.45	mm
Vertical (V)	191.85	192.15	192.45	mm
Depth (D)	3.08	3.38	3.68	mm

4.2. Weight

300 g (typical), 310 g (max)

4.3. Stack-up (tentative)

Mechanical Stack-up	Part #	Thickness /mm
Top Polarizer (glossy, LT4 or ARC7)	Sumika, SRW862APK-LT4	0.215
LCD Glass CF		0.5
LCD Glass TFT		0.5
Bottom Polarizer		0.215
Total Design Gap	-	0.135
Upper Diffuser	Tsujiden D131S	0.095
Upper BEF (Halogen Free)	BEF II-GII MR	0.155
Lower BEF (Halogen Free)	BEF II-GII MR	0.155
Lower Diffuser	Tsujiden D120	0.12
Light Guide	PMMA	0.72
White Reflector (Sulfur-free reflector for PMMA backlight)	E6SR	0.188
Rear Bezel	SUS 304	0.3
Tape		0.1
Total Typical Thickness	w/o PCB	3.38
Maximum Tolerance		0.3
Total Maximum Thickness	(w/o PCB)	3.68
PCB Thickness (8 Layer PCB)		0.8
Maximum Component - 1 side (include Solder)		1.15

Maximum Component - 2 side (include Solder)		0.2
Total Maximum PCB Thickness		2.15

4.4. Exposed Areas and Restrictions

The display module shall not have exposed edges or components, which may cause injury or damage during handling, inspection, assembly, and service. Exposed areas of the display module (those not protected or shielded by construction) must be insulated and otherwise protected to eliminate the possibility of electrical shorting or destructive ESD discharges (per Section 7.2) during handling, inspection, assembly, and service.

4.5. Block Diagram

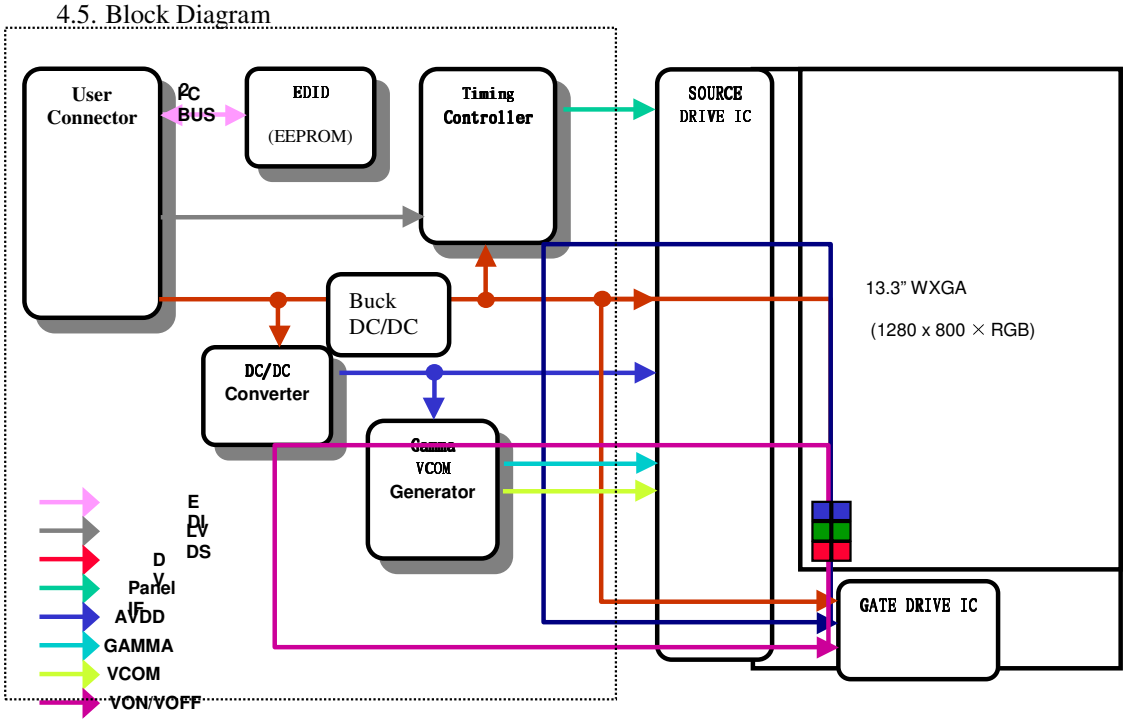

Backlight Driving Architecture

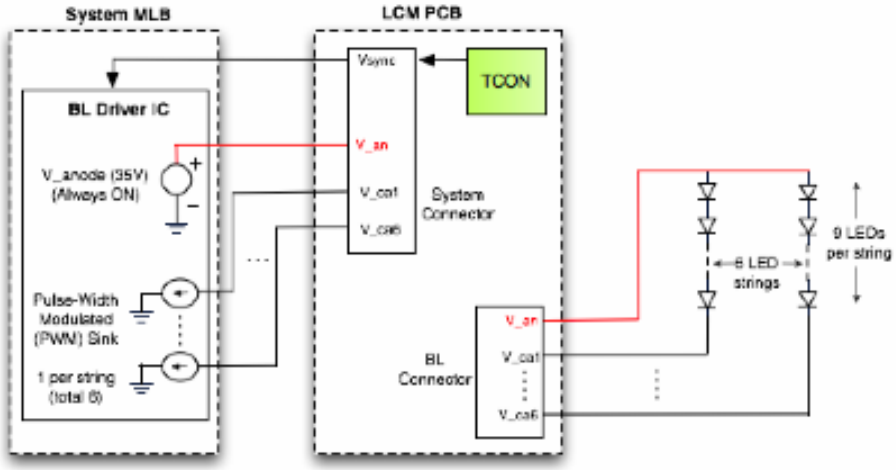

4.6. Display PCB Schematics

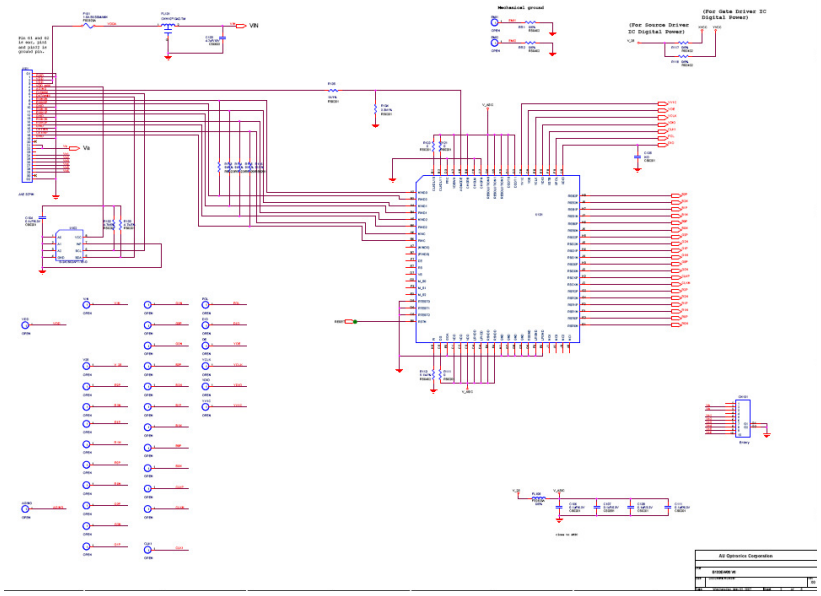

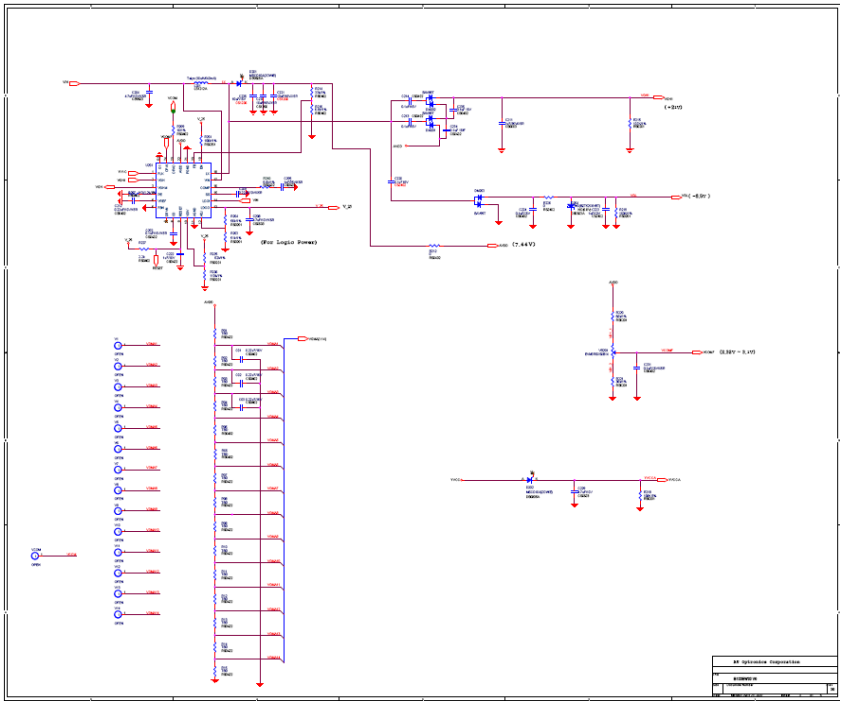

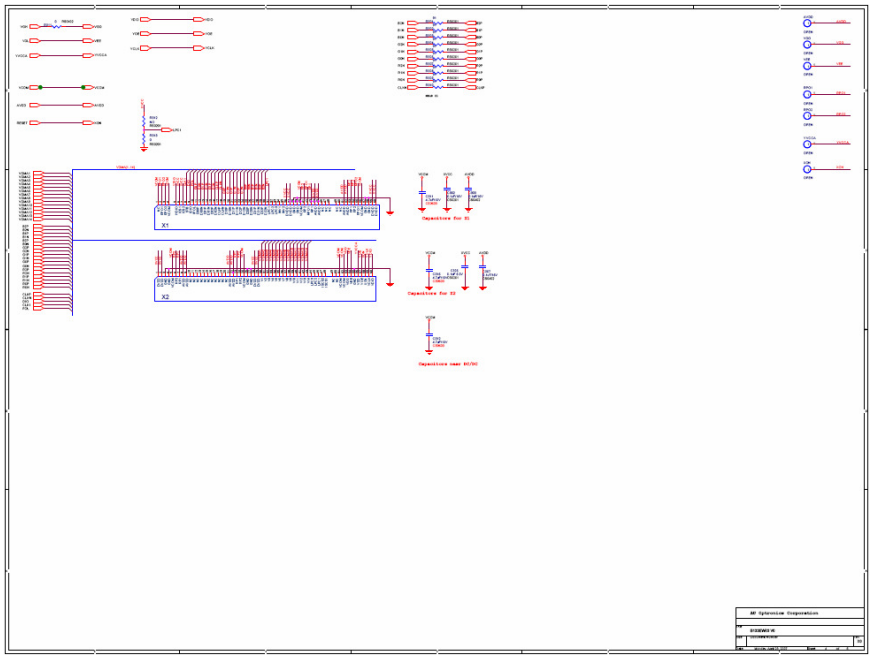

4.7. Display PCB Layout

Display Subsystem (PCB & TFT Panel)

4.7.1. Pin-Out (Single Channel LVDS Interface)

Connector: IPEX 20474-030E-12 or equivalent (1.0 mm thickness, lock-in type, pin 1 starts from left on the front)

Matching Connector: IPEX 20472-030T-10 or equivalent (micro-coax type)

Interface Chips: (need update according the latest Configuration Sheet), integrated LVDS and timing controller)

Single Channel LVDS Configuration			
Pin	Symbol	Description	Micro-coax cable gauge (AWG)
1	GND	Ground	40
2	Vcc	Power Supply (+3.3V)	**36**
3	V_{analog}	Power Supply (+3.3V)	**36**
4	V_{EDID}	DDC Power +3.3V	40

5	Vsync	Vsync	40
6	Clk_{EDID}	DDC Clock	40
7	$DATA_{EDID}$	DDC Data	40
8	Rin0-	Differential Data Input	40
9	Rin0+	Differential Data Input	40
10	GND	Ground	40
11	Rin1-	Differential Data Input	40
12	Rin1+	Differential Data Input	40
13	GND	Ground	40
14	Rin2-	Differential Data Input	40
15	Rin2+	Differential Data Input	40
16	GND	Ground	40
17	Clkin-	Differential Clock Input	40
18	Clkin+	Differential Clock Input	40
19	GND	Ground	40
20	NC	NC	40
21	Vdc(1 &2)	LED Annold (Positive)	40
22	Vdc(3&4)	LED Annold (Positive)	40
23	NC	NC	40
24	Vdc1	LED Cathode (Negative)	40
25	Vdc2	LED Cathode (Negative)	40
26	Vdc3	LED Cathode (Negative)	40
27	Vdc4	LED Cathode (Negative)	40
28	Vdc5	LED Cathode (Negative)	40
29	Vdc6	LED Cathode (Negative)	40
30	NC	NC	40

格式化：項目符號及編號

4.7.2. Connector Diagram

格式化：項目符號及編號

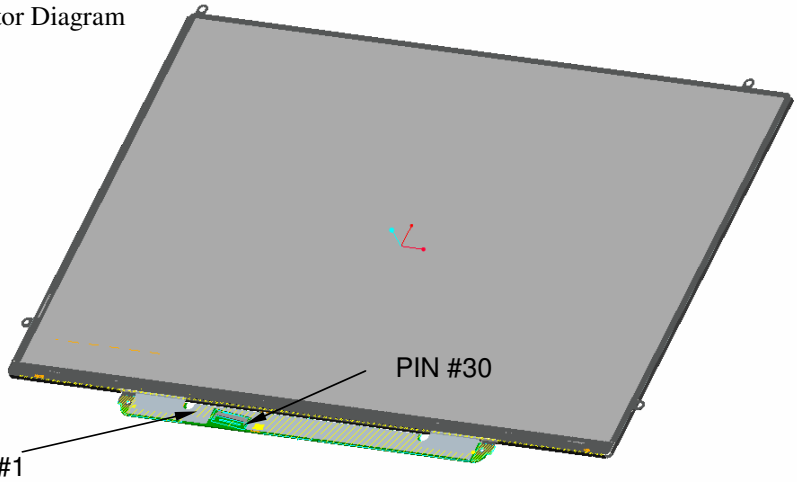

N
□.| Size: **A** | **METRIC**
Title: **Spec, Elec., Dspl.,**

4.7.3. Color Input Data Reference

The brightness of each primary color (red, green and blue) is based on the 6-bit gray scale data input for the color. The higher the binary input, the brighter the color. The table below provides a reference for color versus data input.

COLOR DATA REFERENCE

Color		Input Color Data																	
		Red						Green						Blue					
		MSB					LSB	MSB					LSB	MSB					LSB
		R5	R4	R3	R2	R1	R0	G5	G4	G3	G2	G1	G0	B5	B4	B3	B2	B1	B0
Basic Colors	Black	0	0	0	0	0	0	0	0	0	0	0	0	0	0	0	0	0	0
	Red(63)	1	1	1	1	1	1	0	0	0	0	0	0	0	0	0	0	0	0
	Green(63)	0	0	0	0	0	0	1	1	1	1	1	1	0	0	0	0	0	0
	Blue(63)	0	0	0	0	0	0	0	0	0	0	0	0	1	1	1	1	1	1
	Cyan	0	0	0	0	0	0	1	1	1	1	1	1	1	1	1	1	1	1
	Magenta	1	1	1	1	1	1	0	0	0	0	0	0	1	1	1	1	1	1
	Yellow	1	1	1	1	1	1	1	1	1	1	1	1	0	0	0	0	0	0
	White	1	1	1	1	1	1	1	1	1	1	1	1	1	1	1	1	1	1
Red	Red(00) Dark	0	0	0	0	0	0	0	0	0	0	0	0	0	0	0	0	0	0
	Red(01)	0	0	0	0	0	1	0	0	0	0	0	0	0	0	0	0	0	0
	Red(02)	0	0	0	0	1	0	0	0	0	0	0	0	0	0	0	0	0	0
		:	:	:	:	:	:	:	:	:	:	:	:	:	:	:	:	:	:
	Red(61)	1	1	1	1	0	1	0	0	0	0	0	0	0	0	0	0	0	0
	Red(62)	1	1	1	1	1	0	0	0	0	0	0	0	0	0	0	0	0	0
	Red(63) Bright	1	1	1	1	1	1	0	0	0	0	0	0	0	0	0	0	0	0
Green	Green(00)Dark	0	0	0	0	0	0	0	0	0	0	0	0	0	0	0	0	0	0
	Green(01)	0	0	0	0	0	0	0	0	0	0	0	1	0	0	0	0	0	0
	Green(02)	0	0	0	0	0	0	0	0	0	0	1	0	0	0	0	0	0	0
		:	:	:	:	:	:	:	:	:	:	:	:	:	:	:	:	:	:
	Green(61)	0	0	0	0	0	0	1	1	1	1	0	1	0	0	0	0	0	0
	Green(62)	0	0	0	0	0	0	1	1	1	1	1	0	0	0	0	0	0	0
	Green(63)Bright	0	0	0	0	0	0	1	1	1	1	1	1	0	0	0	0	0	0

Blue	Blue(00) Dark	0	0	0	0	0	0	0	0	0	0	0	0	0	0	0	0	0	0
	Blue(01)	0	0	0	0	0	0	0	0	0	0	0	0	0	0	0	0	0	1
	Blue(02)	0	0	0	0	0	0	0	0	0	0	0	0	0	0	0	0	1	0
		:	:	:	:	:	:	:	:	:	:	:	:	:	:	:	:	:	:
	Blue(61)	0	0	0	0	0	0	0	0	0	0	0	0	1	1	1	1	0	1
	Blue(62)	0	0	0	0	0	0	0	0	0	0	0	0	1	1	1	1	1	0
	Blue(63) Bright	0	0	0	0	0	0	0	0	0	0	0	0	1	1	1	1	1	1

Pixel Format on the Display

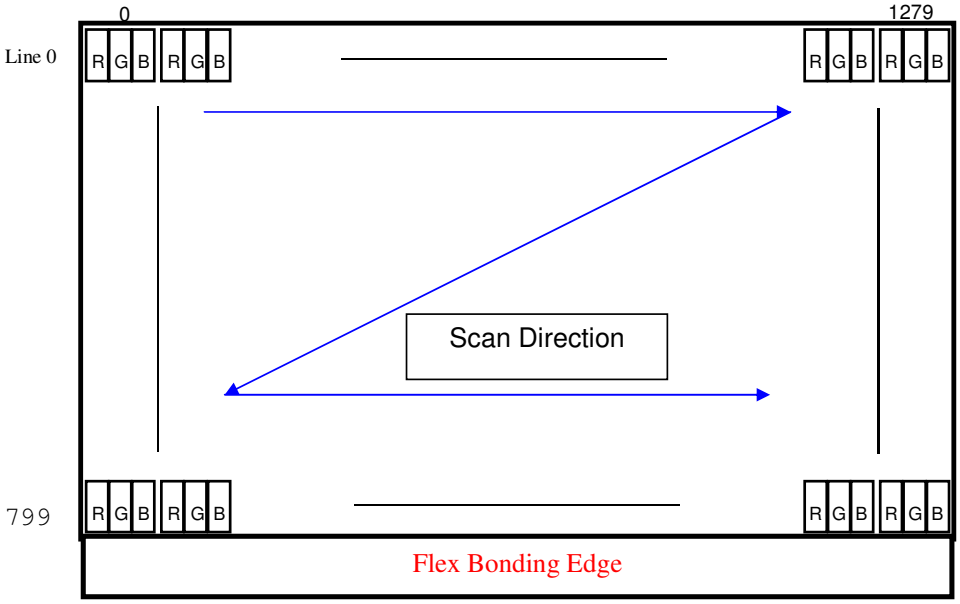

格式化: 項目符號及編號

4.7.4. EDID Interface (Per Vesa EDID 1.x standard requirements)

				Release time	7/11/08 0:00
Address	FUNCTION	B133EW04	Value	Value	Note
HEX	Header	HEX	BIN	DEC	
00		00	00000000	0	
01		FF	11111111	255	
02		FF	11111111	255	
03		FF	11111111	255	
04		FF	11111111	255	
05		FF	11111111	255	
06		FF	11111111	255	
07		00	00000000	0	
08	EISA Manuf. Code LSB	06	00000110	6	APP9CA1
09	Compressed ASCII	10	00010000	16	0 00001(A) 10000(P) 10000(P)
0A	Product Code	A1	10100001	161	9CA1 (assigned code)
0B	hex, LSB first	9C	10011100	156	
0C	32-bit ser #	01	00000001	1	unused
0D		01	00000001	1	
0E		01	00000001	1	
0F		01	00000001	1	
10	Week of manufacture	01	00000001	1	Week 1
11	Year of manufacture	13	00010011	19	19(2009-1990=19)
12	EDID Structure Ver.	01	00000001	1	
13	EDID revision #	03	00000011	3	
14	Video input definition	80	10000000	128	Digital Input
15	Max H image size	1D	00011101	29	28.6cm
16	Max V image size	12	00010010	18	17.9cm
17	Display Gamma	78	01111000	120	Gamma 2.2
18	Feature support	0A	00001010	10	no DPMS,Active off,RGB color
19	Red/green low bits	50	01010000	80	
1A	Blue/white low bits	85	10000101	133	
1B	Red x/ high bits	97	10010111	151	Rx=0.640
1C	Red y	58	01011000	88	Ry=0.340
1D	Green x	50	01010000	80	Gx=0.310
1E	Green y	8E	10001110	142	Gy=0.610
1F	Blue x	27	00100111	39	Bx=0.150
20	Blue y	27	00100111	39	By=0.060
21	White x	50	01010000	80	Wx=0.313

22	White y	54	01010100	84	Wy=0.329
23	Established timing 1	00	00000000	0	unused
24	Established timing 2	00	00000000	0	
25	Manufacturer's Timing	00	00000000	0	
26	Standard timing #1	01	00000001	1	unused
27		01	00000001	1	
28	Standard timing #2	01	00000001	1	
29		01	00000001	1	
2A	Standard timing #3	01	00000001	1	
2B		01	00000001	1	
2C	Standard timing #4	01	00000001	1	
2D		01	00000001	1	
2E	Standard timing #5	01	00000001	1	
2F		01	00000001	1	
30	Standard timing #6	01	00000001	1	
31		01	00000001	1	
32	Standard timing #7	01	00000001	1	
33		01	00000001	1	
34	Standard timing #8	01	00000001	1	
35		01	00000001	1	
36	Pixel Clock/10,000 (LSB)	52	01010010	82	**Timing Descriptor #1**
37	Pixel Clock/10,000 (MSB)	1C	00011100	28	1280x800 @60_mode:pixel clock=72.5MHz
38	Horiz. Active pixels(Lower 8 bits)	00	00000000	0	Horiz active=1280 pixels
39	Horiz.Blanking (Lower 8 bits)	8F	10001111	143	Horiz blanking=143pixels
3A	Horiz. Active pixels:Horiz. Blanking (Upper4:4 bits)	50	01010000	80	
3B		20	00100000	32	Vertcal active=800 lines
3C		2E	00101110	46	Vertical blanking=46 lines
3D	Vert. Active pixels:Vert. Blanking (Upper4:4 bits)	30	00110000	48	
3E		30	00110000	48	Horiz sync. Offset=48 pixels
3F		20	00100000	32	Horiz sync. Pulse Width=32 pixels
40	Vert. Sync. Offset=xx lines, Sync Width=xx lines	36	00110110	54	Verti sync. Offset=3 lines,Sync Width=6 lines
41	Horz. Ver. Sync/Width (upper 2 bits)	00	00000000	0	

42	Hori. Image size (Lower 8 bits)	1E	00011110	30	Hori image size= 286 mm
43	Vert. Image size (Lower 8 bits)	B3	10110011	179	Verti image size = 179mm
44	Hori. Image size : Vert. Image size (Upper 4 bits)	10	00010000	16	
45		00	00000000	0	Horizontal Border = 0
46		00	00000000	0	Vertical Border = 0
47		18	00011000	24	
48	Detailed timing/monitor	00	00000000	0	
49	descriptor #2	00	00000000	0	
4A		00	00000000	0	
4B		01	00000001	1	
4C	Version	00	00000000	0	
4D	edid signature	06	00000110	6	
4E	edid signature	10	00010000	16	
4F	Link Type (LVDS Link,MSB justified)	20	00100000	32	
50	Pixel and link component format (6-bit panel interface)	00	00000000	0	
51	Panel features (No inverter)	00	00000000	0	
52		00	00000000	0	
53		00	00000000	0	
54		00	00000000	0	
55		00	00000000	0	
56		00	00000000	0	
57		00	00000000	0	
58		0A	00001010	10	
59		20	00100000	32	
5A	Detailed timing/monitor	00	00000000	0	ASCII Data String:B133EW07 V0
5B	descriptor #3	00	00000000	0	
5C		00	00000000	0	
5D		FE	11111110	254	
5E		00	00000000	0	
5F		42	01000010	66	B
60		31	00110001	49	1
61		33	00110011	51	3
62		33	00110011	51	3
63		45	01000101	69	E
64		57	01010111	87	W
65		30	00110000	48	0
66		37	00110111	55	7

67		20	00100000	32	
68		56	01010110	86	V
69		30	00110000	48	0
6A		0A	00001010	10	
6B		20	00100000	32	
6C	Detailed timing/monitor descriptor #4	00	00000000	0	Monitor Name: Color LCD
6D		00	00000000	0	
6E		00	00000000	0	
6F		FE	11111110	254	
70		00	00000000	0	
71		43	01000011	67	C
72		6F	01101111	111	o
73		6C	01101100	108	l
74		6F	01101111	111	o
75		72	01110010	114	r
76		20	00100000	32	
77		4C	01001100	76	L
78		43	01000011	67	C
79		44	01000100	68	D
7A		0A	00001010	10	
7B		20	00100000	32	
7C		20	00100000	32	
7D		20	00100000	32	
7E	Extension Flag	00	00000000	0	
7F	Checksum	13	00010011	19	

格式化: 項目符號及編號

4.7.5. Electrical Ratings

PARAMETER	SYMBOL	VALUES			UNIT	NOTES
		Min.	Typ.	Max.		
Power Supply Input Voltage	V_{CC}	3.0	3.3	3.6	V (DC)	

Power Supply Ripple			50		mV_{p-p}	1
Power Supply Input Current	I_{CC}	-	242	273	mA	2
Differential Impedance	Z_m	90	100	110	Ω	3
Power Consumption	P_c	-	0.8	0.9	W	2
Rush current	I_{RUSH}	-	-	1.5	A	4

Notes: (1) The power supply ripple is measured whereas a black pattern is displayed;

(2) The specified current and power consumption are under the conditions at V_{cc} = 3.3 V, T = 25ºC, and f_v = 60 Hz, f_{CLK}=72.5MHz, whereas a mosaic pattern (typical) is displayed;

(3) This impedance value is needed to a proper display and is measured from LVDS mating connector to LVDS Rx

(4) The following is a typical Vcc circuit on the system side

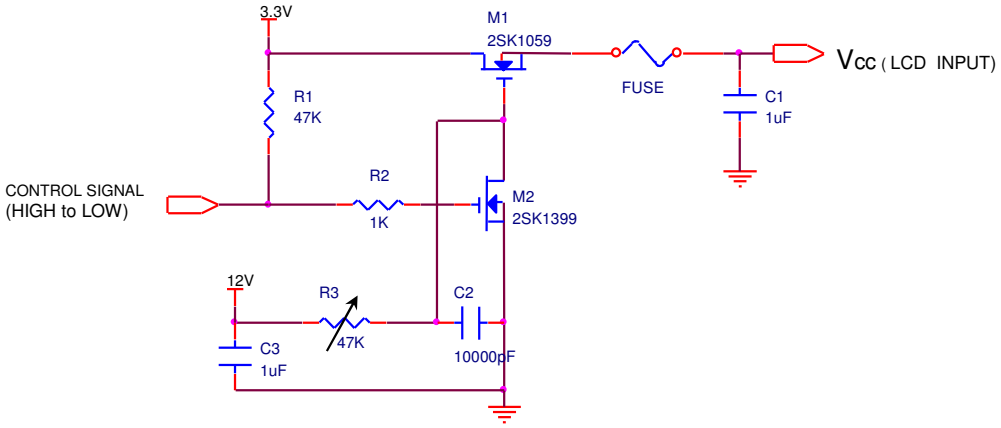

<u>V_{cc} rise time is about 470 µs</u>

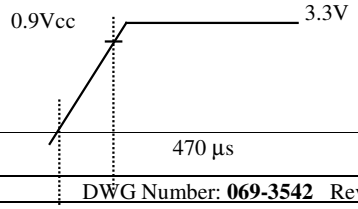

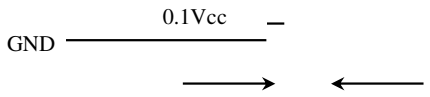

The duration of the rush current is about 20 ms.

格式化: 項目符號及編號

4.7.6. Signal Timing

4.7.6.1. Signal Impedance

Defined in VESA standard for LVDS FPDI 2

格式化: 項目符號及編號

4.7.6.2. Timing Data

This is the signal timing required at the input of the control ASIC concerned with LVDS as a FlatLink or equivalent. All of the interface signal timing should be satisfied with the following specifications based on the VESA timing guideline (1280x800 @ 60 Hz) for its proper operation.

Video Timing Data

Signal	Parameter	Symbol	Min	Typ	Max	Unit	Note
D_{CLK}	Clock Period	T_C		13.79		ns	1
	Clock Frequency	f_C		72.50		MHz	$1/T_C$
	Duty Ratio (% High)	K_{dr}	40	50	60	%	T_{Ch}/T_C
	Rise Time	$T_{R\ CLK}$	-	4.42	-	ns	
	Fall Time	$T_{F\ CLK}$	-	4.42	-	ns	
DE	DE Setup Time	T_{se}	4	-	-	ns	
(Data Enable	Data Setup Time	T_{sd}	4	-	-	ns	
Only)	Data Hold Time	T_{hd}	2	-	-	ns	
(DTMG)	Horizontal Period	T_H		1440		T_C	2
Data	Horizontal Blank Period	T_{ha}		160		T_C	
	Vertical Period	T_V		823		T_H	f_V=59.94 Hz, 3
	Vertical Blank Period	T_{wvb}		23		T_H	
H_{sync}	H_{sync} Back Porch	H_{bp}		80		T_C	
	H_{sync} Pulse Width	T_{WH}		32		T_C	
	H_{sync} Front Porch	H_{fp}		48		T_C	
	Horizontal Active Period	T_{HD}	1280	1280	1280	T_C	Display Period
V_{sync}	V_{sync} Back Porch	V_{bp}		14		T_H	
	V_{sync} Pulse Width	T_{WV}		6		T_H	
	V_{sync} Front Porch	V_{fp}		3		T_H	
	Vertical Active Period	T_{VD}	800	800	800	T_H	Display Period

Note: (1) When the WXGA+ controller sets DE Mode, and H_{sync} and V_{sync} are required. The duration of DE (DTMG) signal must be longer than 1 clock period (T_C) at every horizontal sync period;

(2) Horizontal Period = One Line Scanning Time;

(3) The vertical period T_V is related to the frame frequency f_V, *i.e.*, 60 Hz.

格式化：項目符號及編號

4.7.6.3. Video Timing Diagram

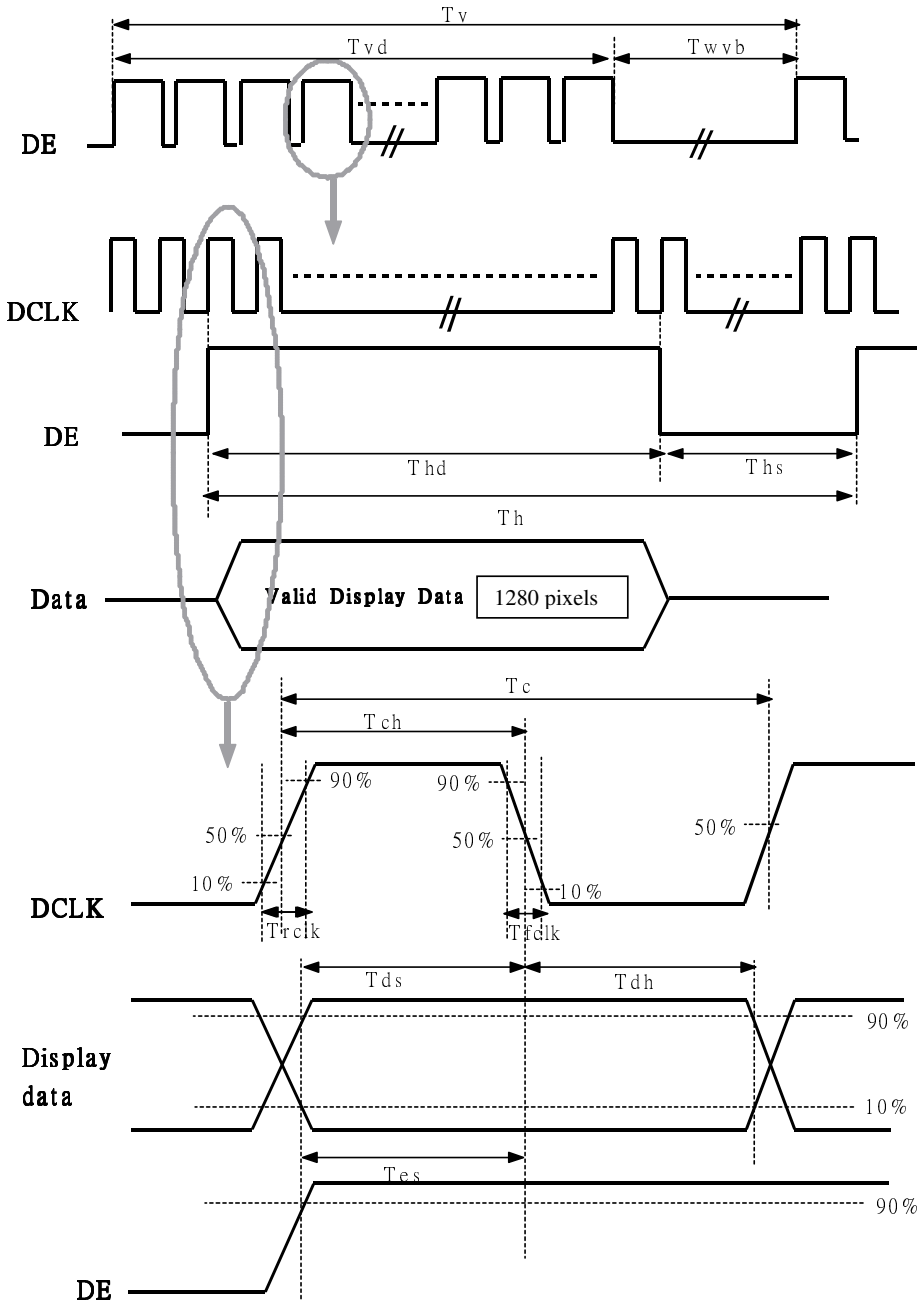
Tv
Tvd
Twvb
DE
DCLK
DE
Thd
Ths
Th
Data
Valid Display Data
1280 pixels
Tc
Tch
90%
90%
50%
50%
50%
10%
10%
DCLK
Trclk
Tfclk
Tds
Tdh
90%
Display
data
10%
Tes
90%
DE

格式化: 項目符號及編號

4.7.7. Power Measurements (W/O backlight)

Pattern	Min	Typ	Max	Unit
White	To be updated			mA
Mosaic		242	273	mA
V. Stripe	To be updated			mA
Black		273	303	mA

Note: (1) Display data pins and timing signal pins should be connected (GND = 0V);

(2) Operation conditions: f_V = 60 Hz, f_{CLK} = 72.5 MHz, V_{cc} = 3.3 V;

(3) Power dissipation patterns are as follows.

(a) White screen

(b) Mosaic (or checker) pattern

20x20 pixel black and white boxes

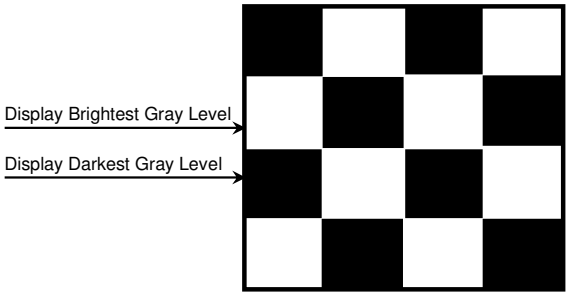

(c) Vertical Stripe Pattern

sub-pixel vertical line on/off alternation,

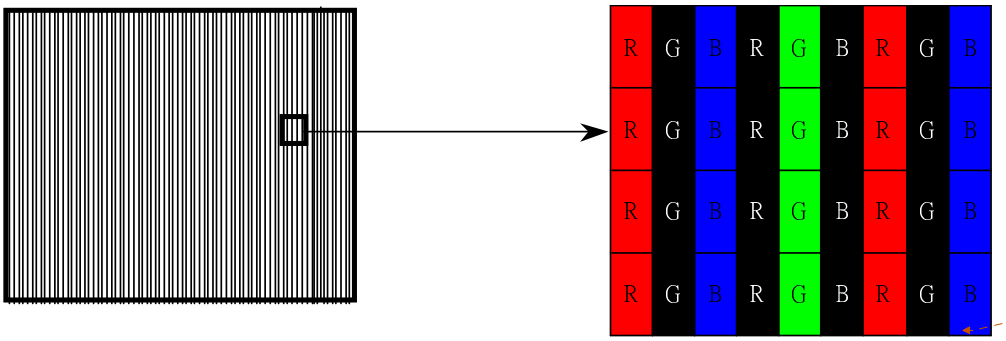

格式化: 項目符號及編號

4.7.8. Power on-off sequence

Power-on includes both system starting from power-off state and wake from sleep state; power-off includes both system shutdown and entering sleep state.

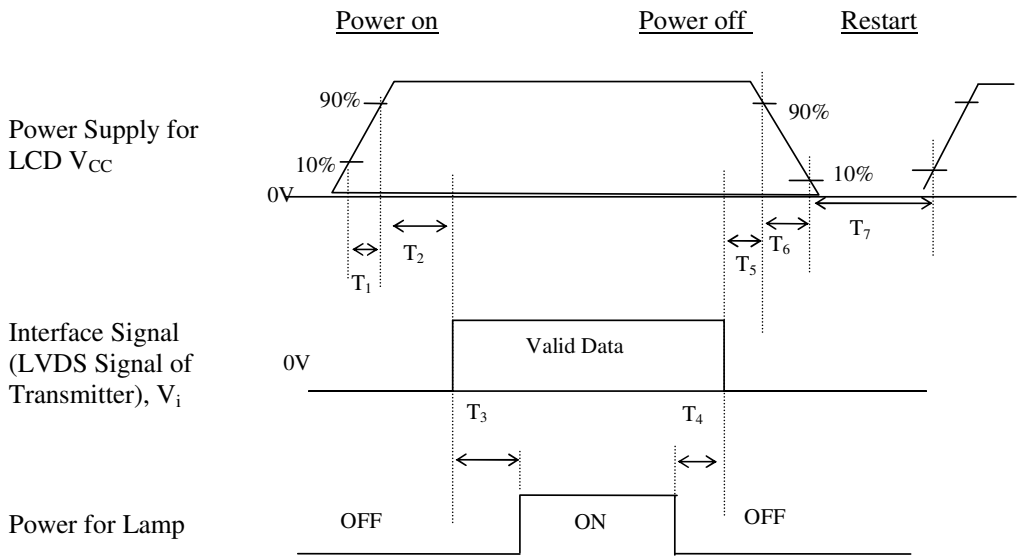

Parameter	Values			Unit
	Min.	Typ.	Max.	
T_1	0.15	-	10	ms
T_2	1	20	50	ms
T_3	200	250	-	ms
T_4	200	250	-	ms
T_5	0	20	50	ms
T_6	5	-	20	ms
T_7	500	-	-	ms

4.7.9. Vcc Dip Condition

The V_{cc} dip is the Vcc voltage drop during panel start-up.

(1) 2.5V ≤ V_{cc} < 3.0 V, T_d ≤ 20 ms;

(2) For V_{cc} < 2.5V, V_{cc} should follow the power on-off sequence defined in 4.7.8

刪除: 5.4.8

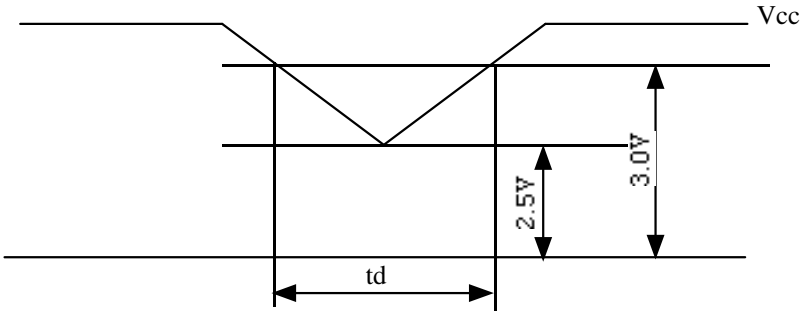

格式化: 項目符號及編號

4.8. Near-Field Noise

The RF emissions from the panel (especially the LVDS input and Tcon) interfere with Wifi operation.

Note that this spec compliance requirement is in addition to the legal EMI compliance requirements.

格式化: 項目符號及編號

4.9. Backlight Subsystem

4.9.1. General Information

LED Manufacturer	Nichia
LED Manufacturer Assembly P/N	Nichia NNSW208
Number of LEDs	54
LED Ranks	V630 and up
LED Brightness Bin	50 mcd per bin
LED Vf Bin	Rank 1 (2.8-3.0 V) and 2 (3.0-3.2 V)
LED Forward Voltage Range for All 6 LED Series Lines	MAX: 28.8 V (Characterized at LVDS Connector for 23 mA)

格式化: 項目符號及編號

4.9.2. Backlight Synchronization Requirement (to avoid BL shimmering)

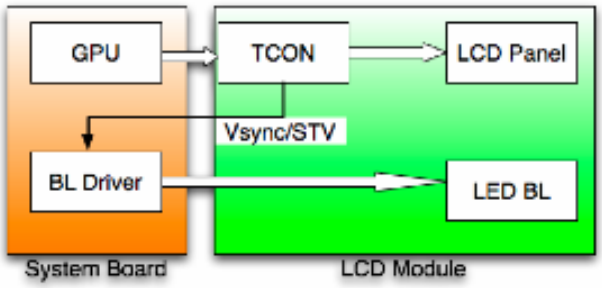

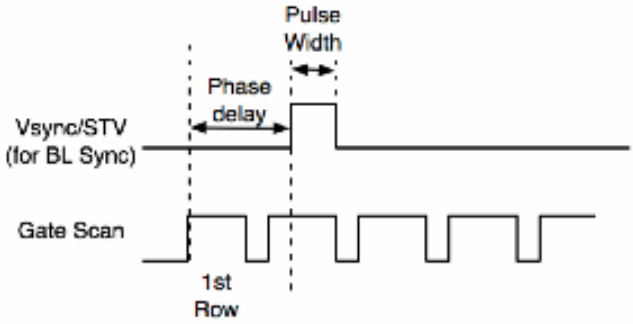

The Vsync/STV signal is a once-per-frame pulse that has a constant phase delay with respect to the start of the frame. This signal is used by the backlight LED driver to synchronize BL PWM with the frame update to avoid shimmering (waterfall) artifacts in the image.

The minimum pulse width is 1 us.

格式化: 項目符號及編號

4.9.3. Backlight Electrical Characteristics

The backlight brightness test shall be tested at 600Hz PWM 94% cycle & 23 mA peak current with following percentage duty cycle

LED Current (% duty cycle)	LED Forward Voltage for any LED string	Power (W) Assuming 3.2V max forward bias	Display Minimum Luminance (nits)	Display Typical Luminance (nits)	Display Maximum Luminance (nits)
94%	28.8 V	3.73	250	275	300

19%	28.8 V	0.75	50	55	60
5%	28.8 V	0.19	12	14	15

格式化：項目符號及編號

4.9.4. LED Connection

String	LED1	LED2	LED3	LED4	LED5	LED6	LED7	LED8	LED9
1	1	7	13	19	25	31	37	43	49
2	2	8	14	20	26	32	38	44	50
3	3	9	15	21	27	33	39	45	51
4	4	10	16	22	28	34	40	46	52
5	5	11	17	23	29	35	41	47	53
6	6	12	18	24	30	36	42	48	54

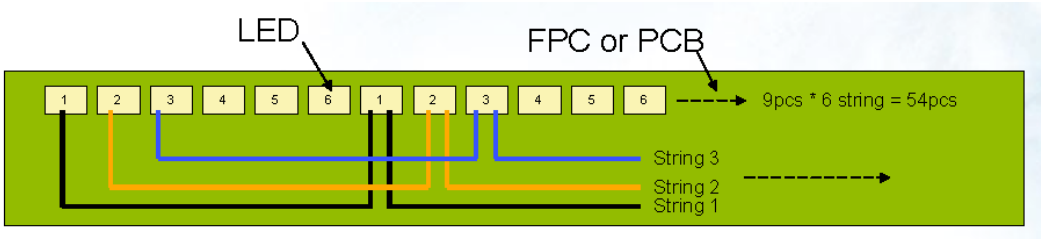

5. OPTICAL REQUIREMENTS

5.1. Optical Specifications

Supplier must submit optical measurement data from 20 samples for items marked critical in Table 6.1.1. The optical performance will be based on supplier's measurement data, visual inspection of the samples, verification measurements, and specification correlation.

Table 6.1.1: Optical Characteristics

Parameter	Symbol	Condition	Min.	Typ.	Max.	Unit	Note
Iso-Contrast Viewing Angle CR ≥ 10	θ	up	45	50	--	Degrees	1,2,3
		down	45	50			
		left/right	55/55	60/60			
Contrast ratio	CR	Optimal	400	600	--	--	1,2,3
Luminance	Y	I_{LED}=23 mA @94% duty cycle	220	250	--	cd/m^2	1,2,4
Global Luminance Uniformity		Optimal	50		--	%	1,2
Worst Neighbor Luminance Uniformity		Optimal	80		--	%	1,2
Gamma	γ	--	--	2.2	--	--	1,2,3
Flicker	F	No Visual Flicker	--	--	-30	dB	1,2,3
Cross Talk	D_{SHA}	Optimal	--		2.0	%	1,2,3
Worst Low Level (dark) Inversion Viewing Direction		PCB on the bottom	--	6:00	--	o'clock	1,2
Response (rise+fall time)	τ_{on+off}	θ = 0°, Ta=25°C	--	16	25	ms	1,2,3
Gray to Gray Response time	τ_{G2G}	θ = 0°, Ta=25°C	--		40	ms	1,2,3
White Chromaticity (all panels)	x	CIE 1931	0.297	0.313	0.329	--	1,2,3
	y		0.313	0.329	0.345	--	1,2,3
White Chromaticity (Within one panel)	delta x				0.005		
	delta y				0.008		
Red Chromaticity	x	CIE 1931	0.620	0.640	0.660	--	1,2,3
	y		0.315	0.330	0.345	--	1,2,3

Parameter	Symbol	Condition	Min.	Typ.	Max.	Unit	Note
Green Chromaticity	x	CIE 1931	0.290	0.310	0.330	--	1,2,3
	Y		0.590	0.610	0.630	--	1,2,3
Blue Chromaticity	X	CIE 1931	0.120	0.150	0.170	--	1,2,3
	Y		0.040	0.060	0.080	--	1,2,3
Max color difference within one panel	du'v'	white			0.005		1,2
Max color difference w.r.t. Center within one panel	du'v'	white			0.003		1,2
Max color difference from panel to panel	du'v'	white			0.008		
Max color difference between neigbors	du'v'	white			0.0025		1,2

Note 1: The testing conditions are specified in 6.2.

Note 2: The definitions of optical characteristics are shown in 6.3.

Note 3: Measured at center point. Equivalent performance over the entire panel required.

Note 4: Both center point and average of 160 points.

5.2. Measuring Conditions

The optical characteristics are determined after the unit has been 'ON' and stable for approximately 30 minutes at the maximum brightness, in a dark environment at an ambient temperature at 25°C ± 2°C. The electrical conditions include V_{cc} = 3.3 V, f_v = 60 Hz, f_{CLK} = 72.5 MHz, I_{BL} = 23 mA @94% duty cycle with 600Hz. Recommended measuring equipments for luminance and color are CCD based imaging systems such as Radiant Imaging Prometric 1400 system, or Colorimeter such as Photo Research PR650, TOPCON BM-5A or similar. The measuring distance should be about 50 cm from the LCD surface at normal unless otherwise specified. Measurements should be done on the 160 grid points as shown in the following figures. The measurement spot at the center is approximately 12 mm in diameter from a distance of 400 mm by TOPCON BM-5A or 15 mm in diameter from a distance of 500 mm by PR 650.

Viewing angle measurements should be done by an Eldim EZ Color system or similar.

The CIE 1931 or 1976 Standards will be used.

Luminance and Color Measurement

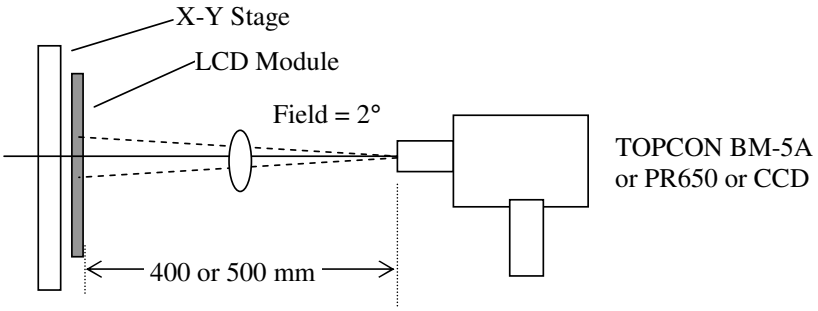

Viewing Angle Measurement

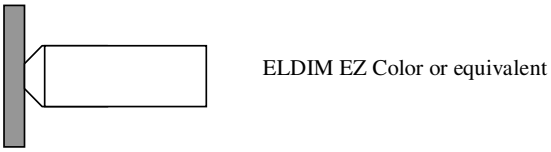

Figure 6-1: Optical Measurement Set-up

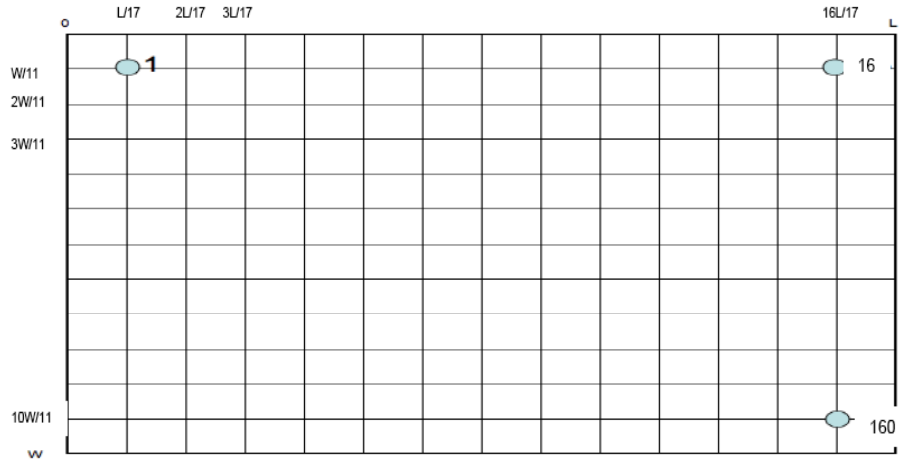

Figure 6-2: Measurement point location. L and W are the length and width of Active Area respectively.

5.3. Definition

5.3.1. Center Point Luminance

L_{ct} =(L_{72+} L_{73+} L_{88+} L_{89})/4{Average Luminance value at point #72, 73, 88, 89}

5.3.2. Average Luminance

L_{Ave} = SUM(L_1:L_{160}) / 160

where L_1 to L_{160} are the luminance values measured at point #1 to #160.

5.3.3. Luminance Uniformity

The entire display active area shall be scanned with the luminance measurement with white screen set full brightness.

two kinds of data for brightness uniformity: Luminance Uniformity, and Worst Neighbor Luminance Uniformity. The definitions are shown in below:

5.3.3.1. Global Luminance Uniformity:

U = 100% - (L_{max}-L_{min})/L_{max}

where, L_{max} = max {Luminance values at 160 points},

L_{min} = min {Luminance values at 160 points}

5.3.3.2. Worst Neighbor Luminance Uniformity (The 4 points that are closest to the test point)

WNU=100%-Max(ΔL1, ΔL2, ΔL3, ΔL4)/L0

Global WNU = min (WNU1, …WNU160)

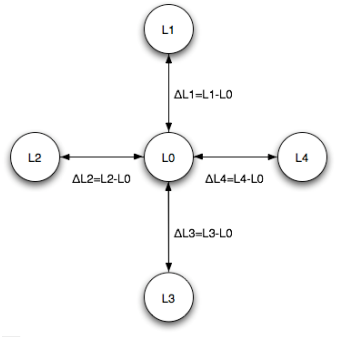

5.3.4. Contrast Ratio

CR = Luminance at G_{max} / Luminance at G_{min} {Average contrast value at point #72, 73, 88, 89}

5.3.5. White Color Uniformity

The entire display active area shall be scanned with the color coordinate measurement with white screen set full brightness.

5.3.5.1. Panel to Panel White Color Uniformity

The center point (as defined by the average value at point #72, 73, 88, 89) white color coordinate of any panel shall be within the box with 4 corners coordination boundary listed in Table 6.1.

5.3.5.2. Max Color Difference with respect to the center within a panel

On each panel, the maximum color difference between any of the 160 points and the center point (defined as the average value at point #72, 73, 88, 89), represented in delta u'v'.

5.3.5.3. Max Color Difference between any two points within the panel

On each panel, the maximum color difference between any two of the 143 points , represented in delta u'v'.

5.3.5.4. Max Color Difference between two neighbors

On each panel, the maximum color difference between any two neighboring points on the panel, represented in delta u'v'

5.3.6. RGB Color Chromaticity

The entire display active area shall be scanned with the color coordinate measurement with screen set to full brightness and solid R, G, B color respectively. The measured color coordinate of any panel shall be within the box with 4 corners coordination boundary listed in Table 6.1.

5.3.7. Viewing Angle

The viewing angle is defined as the viewing angle range under the condition at CR $\geq$ 10:1 .

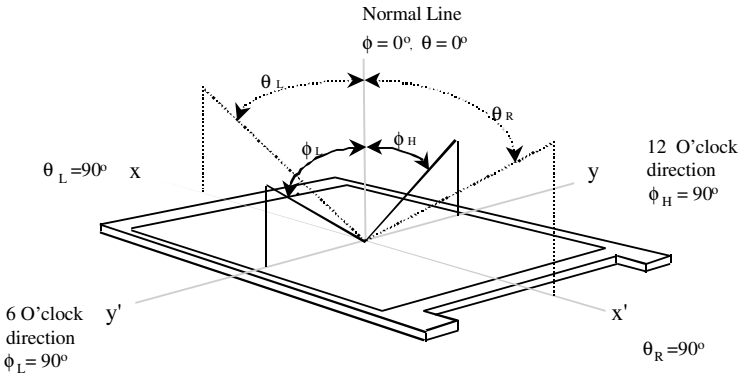

Figure 6-4: Viewing angle definition

5.3.8. Gray Scale Inversion

Luminance vs. viewing angle curves are measured based on gray level 255, 223, 191, 159, 127, 95, 63, 32 and 0, in the viewing angle of left, right, up, down, with PCB on the bottom side. Gray scale inversion happens when a higher gray scale measures the same luminance or lower luminance than any of the lower gray scale.

5.3.9. Response Time

5.3.9.1. On and Off Response Time

The On/Off response time, $t_R + t_F$, is defined in the following figure and shall be measured by switching the input signal for "black" and "white".

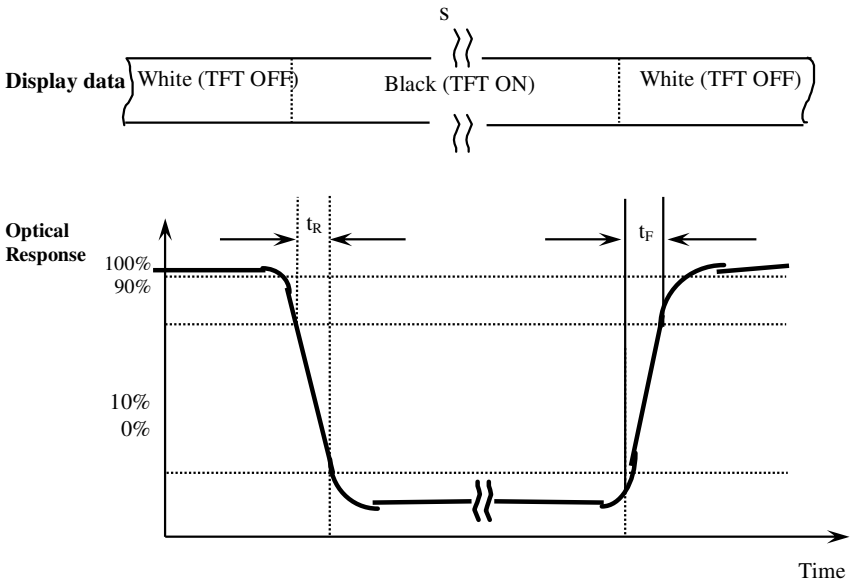

Figure 6-5: Response Time Measurement

5.3.9.2. Gray to Gray Response Time

Gray to Gray Response Time is measured in a similar method. But instead of switching display between black and white, panel is switched between two gray scales. The maximum gray-to-gray response time is based on 9 levels of gray

scales. The 9 levels are: gray level 255, 223, 191, 159, 127, 95, 63, 32 and 0. Figure 6-6 shows an example of Gray to Gray Response Time measurement data.

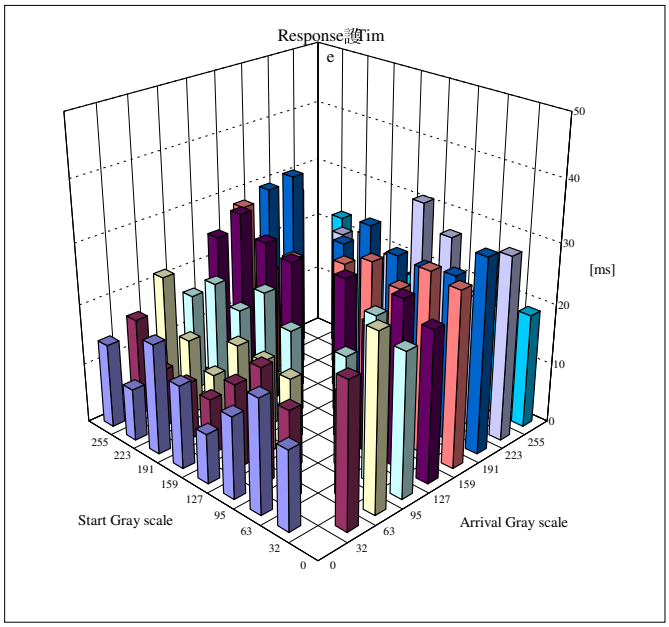

Figure 6-6: Gray to Gray Response Time

5.3.10. Gray Scale Linearity or Gamma Value

The display luminance, L_G, is measured at the different gray scales, G_{min}, …, G_{max}. The exponential fitting is used to determine the gamma (γ) value, which should be an intrinsic or uncorrected characteristic.

$$L_G \sim G^{\gamma}.$$

5.3.11. Flicker

No visual flicker will be allowed. The flicker level should be measured with either vertical stripes or a checker pattern, defined in Sec. 5.3.6. The output signal of a photometer is sent to an FFT analyzer. The flicker is essentially a ratio of the powers in the frequency spectrum at 30 Hz (P_x) and 0 Hz (P_0), *i.e.*,

$$F = 10 \text{ Log } (P_x / P_0).$$

5.3.12. Cross-talk

No visual cross-talk will be allowed. Two luminance values are measured at center spot with 50 x 50 pixels. The cross-talk, D_{SHA}, is defined as,

$$D_{SHA} = (L_B - L_A)/L_B \bullet 100\%,$$

Where, L_A = Luminance in Pattern A

L_B = Luminance in Pattern B.

Pattern A

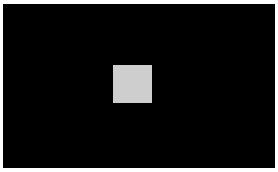

Gray Scale = 127/255 in center
Black in surrounding

Pattern B

Gray Scale = 127/255 full screen

5.4. Hot Spot Specifications:

The LED hot spot shall be inspected from 70 degree to -40 degree per the drawing below. There shall be no visible hot spot or no worse than “limited sample” hot spot (if there is a “limited sample” set up.

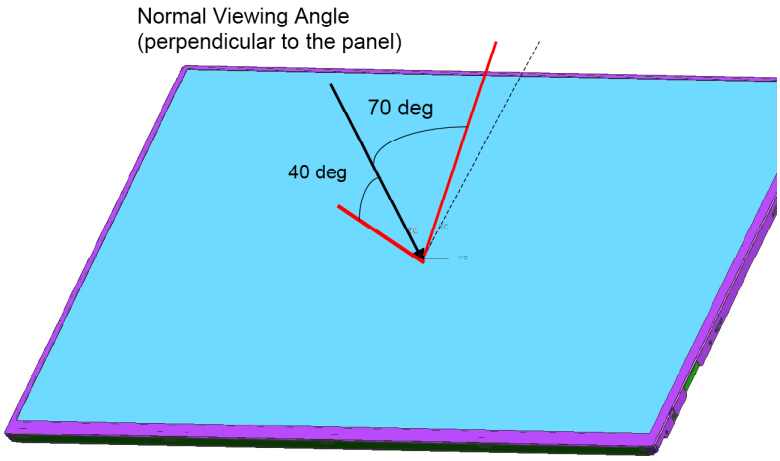
Normal Viewing Angle
(perpendicular to the panel)
70 deg
40 deg

6. ENVIRONMENTAL

The display modules shall meet all functional and cosmetic specifications after testing to the nvironmental quality standards listed in this section. Additionally, the LCD modules in products shall pass all the system testing requirements listed in the end of this document.

删除： e

6.1. Shock and Vibration

7.1.1 There will be no functional or cosmetic defects following a shock to all 6 sides delivering at least 200 G in a half sine pulse no longer than 2 ms to the display module, secured by its designated mounting details, in accordance with MIL-STD-202F Method 213B, test condition A.

7.1.2 There will be no functional defects following a shock delivering at least 260 g in a half sine pulse no longer than 2 ms to each of 6 sides. Each of the 6 sides will be shock tested with one each display, for a total of 6 displays. The displays are secured by designated mounting details, in accordance with MIL-STD-202F Method 213B, test condition A.

7.1.3 There will be no functional or cosmetic defects following a shock delivering at least 60 G in a pulse 11 msec or longer to the display module, secured by its designated mounting details, in accordance with MIL-STD-202F Method 213B, test condition A.

7.1.4 There shall be no functional or cosmetic defects following a vibration test, conducted at **3.0** G from 5–150 Hz, 0.37 Oct/min with sine wave for 30 min./axis, with the display secured by its designated mounting details, and conducted in accordance with MIL-STD-202F, method 201A.

6.2. Temperature and Humidity

Unless otherwise stated in this specification, the display module must meet functional and cosmetic requirements after testing in accordance with Spec. # 080-0859, non-operating and operating conditions.

For these tests, the following limits set forth in Specification #080-0859 shall be altered to read.

6.2.1. General Performance Requirements

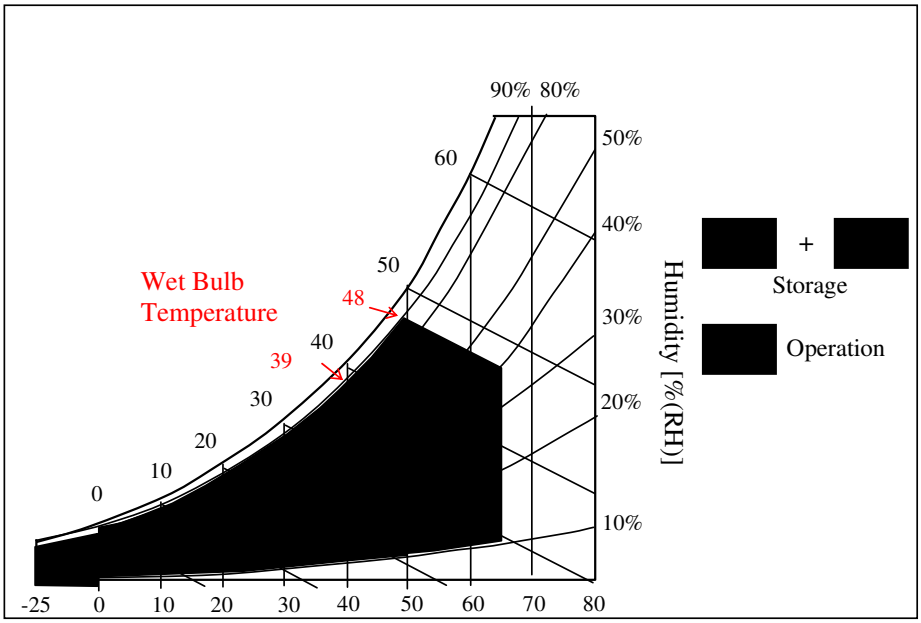

Note:

1) Maximum wet bulb temp operating temperature is 39° C.

2) Maximum wet bulb temp storage temperature is 48°C.

6.2.2. Non-operational Testing

6.2.2.1. Low Temperature

-25°C @ 500 hrs

6.2.2.2. High Temperature

65°C @ 500 hrs

6.2.2.3. High Temperature and High Humidity

60°C @ 500 hrs, R.H. = 75% ± 10%

6.2.2.4. Thermal Shock

Cycle display from -25°C to 65°C with 5-minute transfer time,

100 cycles at -25°C/65°C/-25°C.

6.2.3. Operational Testing

6.2.3.1. Low Temperature

0°C for 500 hours

6.2.3.2. High Temperature

50°C for 500 hours

6.2.3.3. High Temperature and High Humidity

50°C and 90% R.H. for 240 hours (Functional Check)
Maximum wet-bulb temperature at 39°C or lower without condensation.

6.2.3.4. Four Corner Test (72 hrs – operating)

40°C @ 10% RH
40°C @ 90% RH

10°C @10% RH

10°C @ 90% RH

6.3. Altitude

72 hour storage

Operational:	15,000 Ft.
Non-Operational:	40,000 Ft.

7. RELIABILITY

7.1. Resistance to Normal Abuse

7.1.1. Torsion Test

Module is fixed by 4 mounting holes (A, B, & C) on stable supports. Tester is connected to mounting hole on free floating module corner. Push/Pull test is conducted on all four corners.

7.1.2. Test Conditions:

Applied Force	20 N
Cycles	10 K
Frequency (F=push / pull)	1 Hz (1 cycle / sec.)

7.1.3. Test Set-up

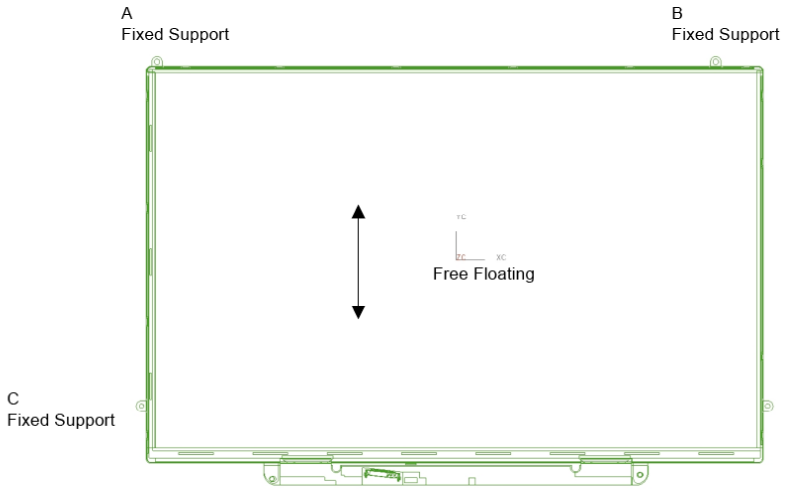

7.1.4. Static Load Deflection and Breakage

Supplier shall demonstrate compliance per Specification 062-2208 Static Breakage Test

7.2. Electrostatic Discharge (ESD)

Display modules are to be tested for ESD susceptibility per specification 062-0302. The display modules must meet the Level 1 for the bare module, and Level 1 through III test requirements stated in the above referenced specification, when assembled in a portable computer.

7.3. MTBF

Supplier to demonstrate display module meets minimum 50,000 Hrs.@90% Confidence Supplier to include any acceleration factors included in the calculations. Power cycling frequency during this test is to be approved.

7.4.LCD Glass Strength

The LCD glass strength (failure load) will be defined at a single 90% survival rate value on Weibull distribution. Please provide the optimized loading performance in the similar chart format below. The failure load of the 90% Weibull survival rate shall be higher than TBD N.

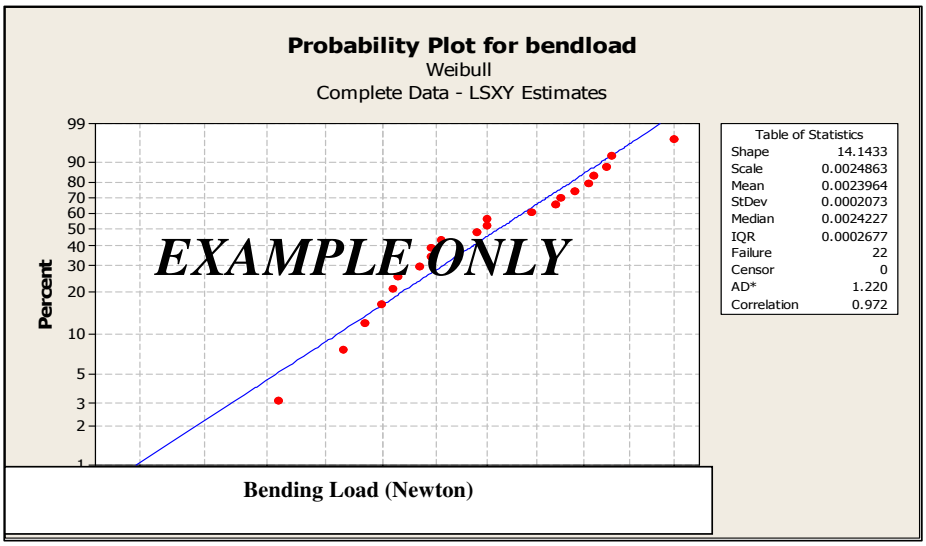

The 4 point bend test shall be used for the LCD glass strength test. The detailed fixture design/ shall follow the **ASTM standard C158-02**. The fixture is used in conduction with a load-displacement machine, commonly known as Instron.

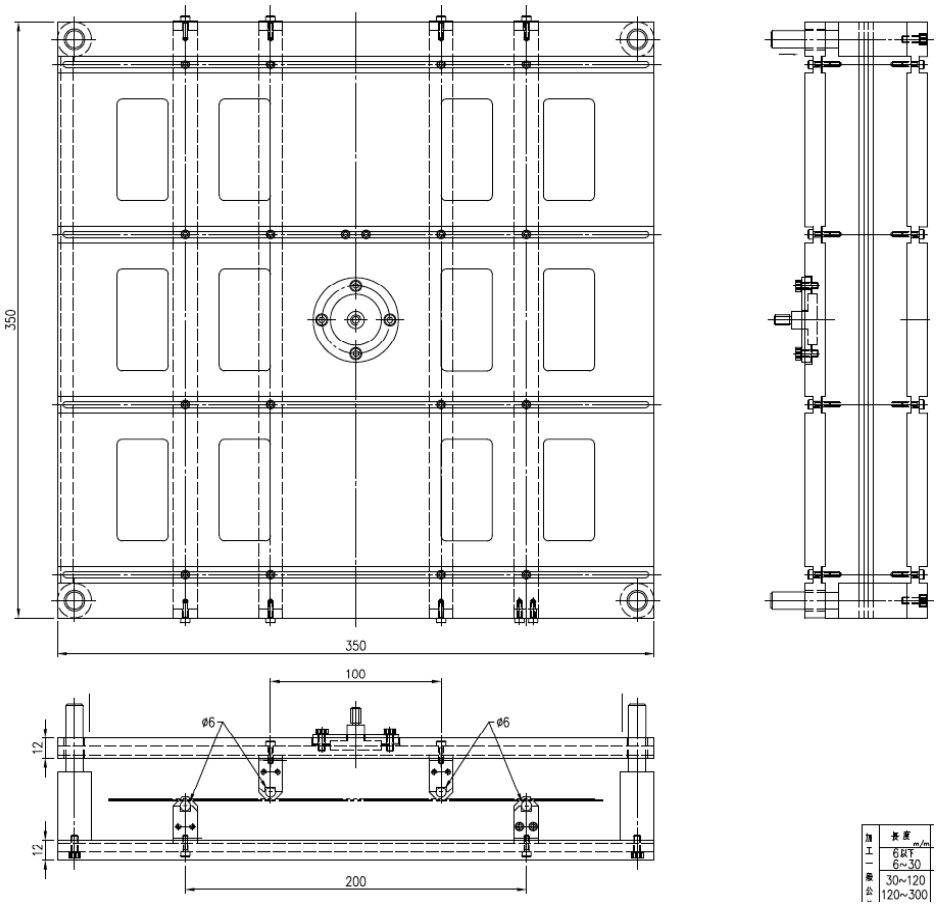

Two orientations must be tested for this specification: orientation A (Figure 2.A) and orientation B (Figure 2.B)

This test shall be performed on 30 samples, **WITH current POLARIZERS** laminated on both top and bottom of the LCD glass, per applicable orientation as a First Article Inspection and when settings, tooling, and equipment are modified. Supplier is responsible for monitoring glass strength on an ongoing production basis. The test shall be conducted with a top rollers velocity of 1 mm/min. As soon as the first plane breaks, the test shall be stopped to prevent the second plane from breaking.

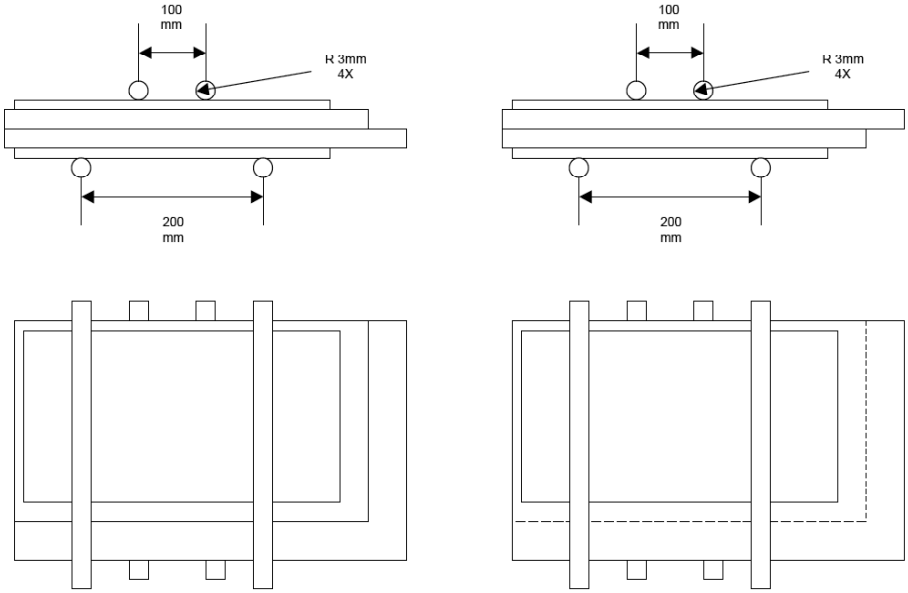

Orientation A. Longer plane parallel to ledge

Orientation B. Shorter plane parallel to ledge

Figure 2. Display orientations measuring strength at edges

LCD glass strength data collection

Failure initiation site must be determined by visual inspection by selecting one of the different cases shown below (Figure 3).

Case A) If the failure is starting from the bottom edge or close to it, enter letter A.

Case B) If the failure is starting from the top edge or close it, enter letter B.

Case C) If the failure is starting from the surface of glass, away from the edges and showing branching in both directions, enter letter C.

Case D) When testing in orientation D (Figure 1.D), if the failure is starting at the epoxy region between the panes, enter letter C edges of the glass (case D).

Case E) If during testing a snap is heard, but no crack is visible, enter letter E

Case O) If the failure does not match any of the above or cannot be easily recognized due to catastrophic breakage, enter letter O.

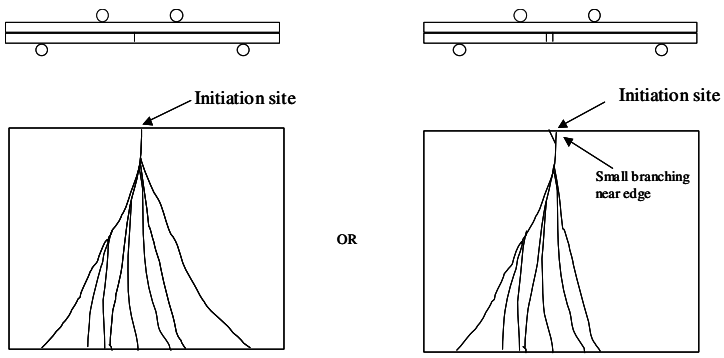

Case A. Failure from bottom edge (with or without slight branching near edge)

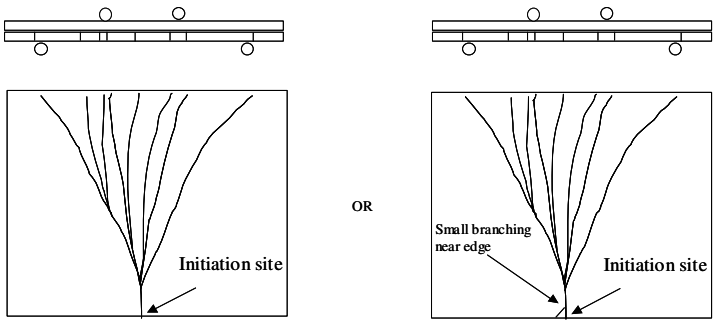

Case B. Failure from top edge (with or without slight branching near edge)

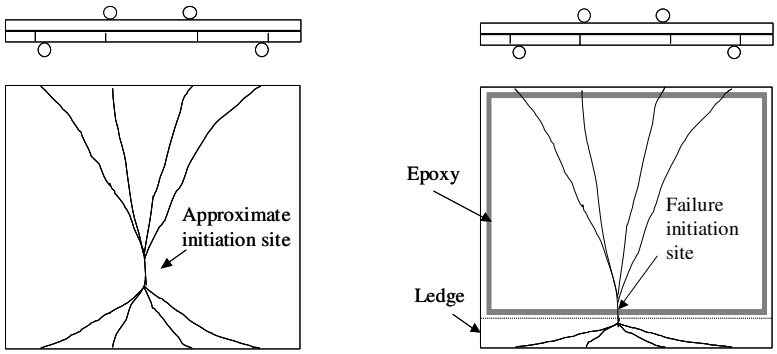

Case C. Initiation on surface of glass Case D. Failure at surface on epoxy region (Orientation D)

Figure 3 Surface crack initiation.

All failure loads and failure initiation sites will be entered in the following table below.

Orientation a b c d (Circle one)		
W [mm] =	Llong [mm] =	
Lshort [mm] =	t [mm] =	
a [mm] =		

Unit #	Failure Load [N]	Failure Initiation Site Case (A, B, C, D, E, or O)
1		
2		
3		
4		
5		
6		
7		
8		
9		
10		
11		
12		
13		
14		
15		
16		
17		
18		
19		
20		
21		
22		
23		
24		
25		
26		

8. COSMETIC REQUIREMENTS

Cosmetic Specification for Notebook Display, 062-7003E.

9. REGULATORY

9.1. Product Safety (Environmental, Ergonomics, Safety and Health)

Materials: specific chemical composition information or certifications necessary for the product to enter countries, markets, and/or for component(s) material identification, or for to respond to customer requests for information. The information may be in the form of, but is not limited to, Material Safety Data Sheets, material specification sheets, health hazard information, certifications, or other forms of documentation.

9.2. RoHS Compliance and other Substance Regulations

This product's components, parts, and packaging shall be manufactured or assembled based upon the following requirements.

10.2.1 The display module must comply with the European RoHS directive, As evidence of such compliance, the supplier must provide a declaration of conformity in accordance with RoHS Declaration of Conformity Procedure, 080-2153.

10.2.2 In addition to RoHS compliance, the display module and its manufacturing process shall comply with Regulated Substances Specification, 069-0135.

10.2.3 The vendor shall provide a written statement declaring the average and maximum amount of mercury in the display module.

10.3 Halogen Free

Flat panel display must be must be halogen-free in accordance with the Halogen-Free Specification, 069-1857

9.3. Environmental Markings and Recycling

10.3.1 Flat panel display must be modular in design so that parts can be easily separated, without any special tools, for ease of proper recycling/disposal at the product's end-of-life.

10.3.2 Flat panel display plastic parts >25 grams must be marked according to ISO 11469 (except for the LGP (light guide panel) and optical films in the backlight).

9.4. Product Safety

Flat panel display assembly shall comply with Specification, 069-0279, Product Safety Requirements for Component Flat Panel Display Assemblies.

9.5. Ergonomics

The flat panel display must comply with the ergonomic requirements of ISO 13406 parts 1 and 2. The vendor shall provide a written statement that the flat panel display, is certified to comply with ISO 13406, parts 1 and 2.

9.6. Electromagnetic Compatibility (EMC)

10.6 Emissions

The final product must meet Class B Emission Standards for home electronic device when configured within a system Spec. #062-0718. The display supplier must provide all necessary support as required to meet this requirement. EMI measurements are taken at the worst-case contrast setting.

10.6.1 Susceptibility

Performance degradation due to external noise or RF will be considered as specified in #062-0718 for Class B products.

10.6.2 Spectrum Spreading Compatibility (SSC)

10.6.2.1 Emissions

The final product must be compatible with spectrum spreading conditions specified in 1.2.2 of this document. No failure or degradation in electronic

functionality and optical performance is allowed with the spreading turned ON compared to that when it is turned OFF.

10.6.2.2 Conditions for Spectrum Spreading

Spreading %: 0% (min.), 0.75% (typical), and 1.5% (max.)

Spreading type: center or down

Modulation Rate: 40 to 80 kHz.

11 FACTORY/SERVICE REQUIREMENTS

11.1 SQBR

Factory requirements are outlined in Supplier Quality and Business Requirements, specification 070-1191.

11.6 SERVICE REQUIREMENTS

Service Requirements are outlined in specification 070-0385.

12 REFERENCE DOCUMENTS