PROPRIETARY NOTE
THIS SPECIFICATION IS THE PROPERTY OF BOE HF AND SHALL NOT BE REPRODUCED OR COPIED WITHOUT THE WRITTEN PERMISSION OF BOE BJ AND MUST BE RETURNED TO BOE HF UPON ITS REQUEST

EV121X0M-N10-Product Specification Rev.0

Buyer	
Supplier	**BEIJING BOE Optoelectronics Technology CO., LTD**
FG-Code	**EV121X0M-N10 (1.0T MDL)**

ITEM	SIGNATURE	DATE
Approved		
Reviewed		
Prepared		

BEIJING BOE OPTOELECTRONICS TECHNOLOGY

REVISION HISTORY

REV.	ECN NO.	PAGE	DESCRIPTION OF CHANGES	DATE	PREPARED
0		39	Initial Release	2019.3.20	王冰

Contents

NO.	ITEMS	PAGE
1.0	General Description	4
2.0	Absolute Maximum Ratings	6
3.0	Electrical Specifications	7
4.0	Optical Specifications	16
5.0	Reliability Test	20
6.0	FPC/IC Pin Assignment & Mechanical Characteristics	21
7.0	Packing Information	28
8.0	Mechanical Outline Dimension	34
9.0	Handling & Cautions	36

1.0 GENERAL DESCRIPTION

1.1 Introduction

EV121X0M-N10 is a color active matrix TFT LCD using amorphous silicon TFT's (Thin Film Transistors) as an active switching devices. This module has a 12.1 inch diagonally measured active area with XGA resolutions (1024 horizontal by 768 vertical pixel array). Each pixel is divided into RED, GREEN, BLUE dots which are arranged in vertical stripe and this module can display 16.7M colors.

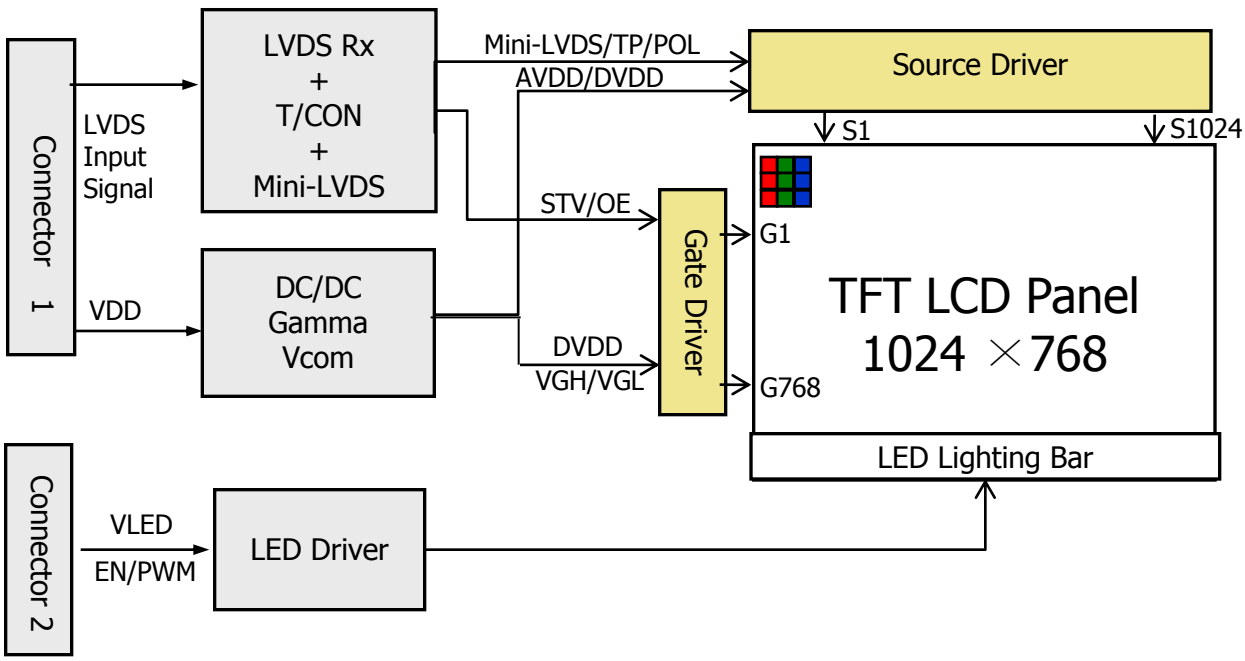

1.2 Features

- RoHS Compliant
- Display Mode: ADS
- Interface: LVDS, 1 port 4 pair
- Real 8 bit
- Normal type

1.3 Application

- Smart Large size vehicle mounted product

1.4 General Specification (H: horizontal length, V: vertical length)

The followings are general specifications at the EV121X0M-N10-1850

<Table 1. General Specifications>

Parameter	ITEMS	Unit	Remark
Active area	245.76(H) ×184.32(V)	mm	
Dimensional Outline	260.5(W)×204(V)×8.7(D)	mm	
Border(L/R/U/D)	3.25/3.35/3.7/3.5	mm	
Number of pixels	1024(H) x768 (V)	pixels	
Pixel pitch	80(H) x240 (V)	mm	
Pixel arrangement	1P2D		
Luminance	Typ 500 nit ; Min 400nit	nit	
Transmittance	Typ:4.5% ; Min:3.8%		without APF
Color Gamut	Type:72% ; Min:67%		
Display colors	16.7M		
Display mode	Normally Black		
Contrast Ratio	Typ:1200 ; Min:900		25℃
Response Time	Typ:25ms ; Max:35ms	ms	25℃
Optima Viewing Direction (Human Eye)	Typ:88/88/88/88	Deg.	CR>10
Driver IC	-		
Weight	450 Max.	gram	
Display Orientation	Landscape Only		

2.0 ABSOLUTE MAXIMUM RATINGS

The followings are maximum values which, if exceed, may cause faulty operation or damage to the unit. The operational and non-operational maximum voltage and current values are listed in Table 2.

<Table 2. Absolute Maximum Ratings >

Parameter	Symbol	Min.	Max.	Unit	Remarks
LC operating Voltage [Note1]	V_{OP}		6.0	V	Ta=25+/-5° C
Operating Temperature	T_{OP}	-20	+70	℃	[Note2]
Storage Temperature	T_{ST}	-30	+80	℃	

Note:

1. Liquid Crystal driving voltage
   Due to the characteristics of LC Material, this voltage varies with environmental temperature.
2. Temperature and relative humidity range are shown in the figure below.
   Wet bulb temperature should be 39 ℃ max. and no condensation of water.

3.0 ELECTRICAL SPECIFICATIONS

3.1 TFT LCD Module

<Table 3. LCD Electrical specifications >

Parameter	Symbol	Value	Range	Unit	Remark
LCD Panel Signal Processing Board	VDD	3.3	3.0~3.6	V	Note1
LCD Panel Signal Current	I_{DD}	0.7	-	A	
In-Rush Current	I_{RUSH}		TBD	A	
LCD Panel Display Power	—	2.31	2.5	W	Note1

Note :

1. The supply voltage is measured and specified at the interface connector of LCM.The current draw and power consumption specified is for VDD=3.3V, Frame rate=60Hz Clock frequency =64.99MHz. Test Pattern of power supply current
   a) Typ : Mosaic 8 x 6 Pattern(L0/L255)
   b) Max : Skip-Subpixel-255

a) Typ : Mosaic 8 x 6 Pattern(L0/L255)

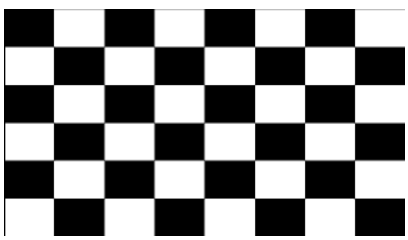

b) Skip-Subpixel-255

3.2 Back-Light Unit

<Table 4. LED Driver Electrical Specifications >

Parameter		Symbol	Values			Unit	Notes
			Min.	Typ.	Max.		
Backlight Input Voltage		VLED	11	12	20	V	
Backlight Input Current		I_{LED}	-	800	-	mA	
Backlight Power		PLED	-	9.6	-	W	Note 1
BLU on/off Level		BLU on	2.0	-	-	V	
		BLU off	0	-	0.8	V	
PWMIN	Level	High Level	2.0	-	-	V	
		Low Level	0	-	0.8	V	
	Frequency	F_{PWM}	190	200	210	Hz	
	Duty Ratio	D_{PWM}	10	-	100	%	
LED Life Time		TLED	50000	-	-	Hrs	Note 2/3

Notes:

1. PLED = VLED $\times I_{LED}$
2. The life time of LED, 50,000Hrs, is determined as the time at which luminance of the LED is 50% compared to that of initial value at the typical LED current on condition of continuous operating at 25 ± 2°C.
3. Only under the above operating conditions could the life time of LED be guaranteed.

3.3 Power Sequence

[Ta =25±2 ℃]

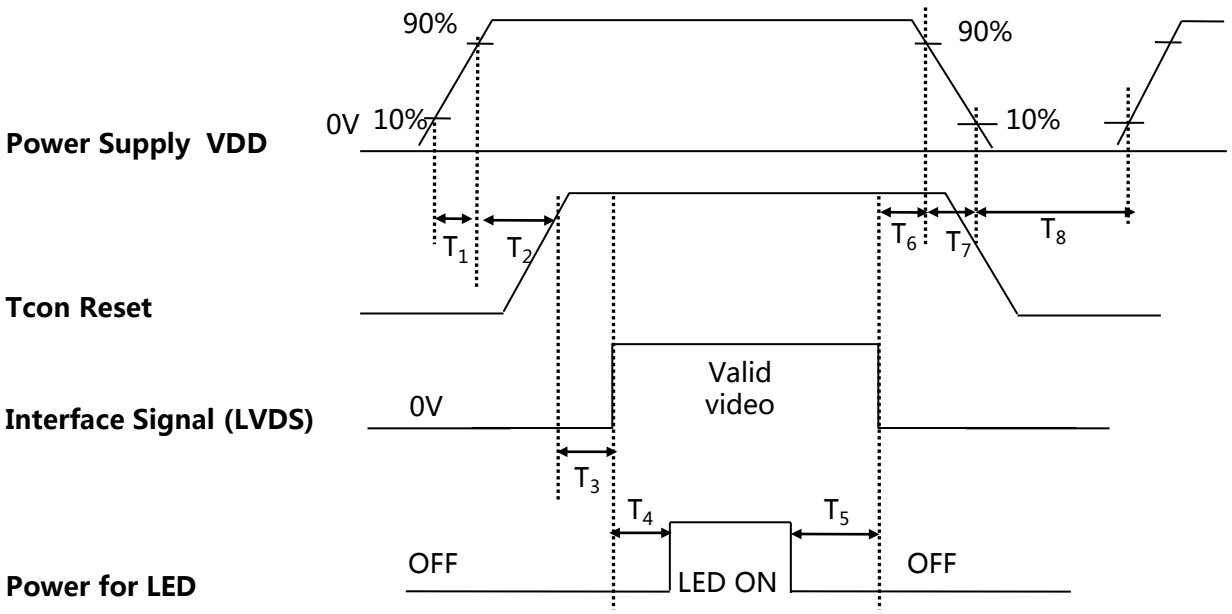

< Table 5. Sequence Table >

Parameter	Value			Units
	Min.	Typ.	Max.	
T1	0.1	-	8	(ms)
T2	-	8	-	(ms)
T3	0	-	-	(ms)
T4	300	-	-	(ms)
T5	300	-	-	(ms)
T6	0	-	50	(ms)
T7	0	-	10	(ms)
T8	500	-	-	(ms)

3.4 LVDS Interface Characteristic

3.4.1 Data Format

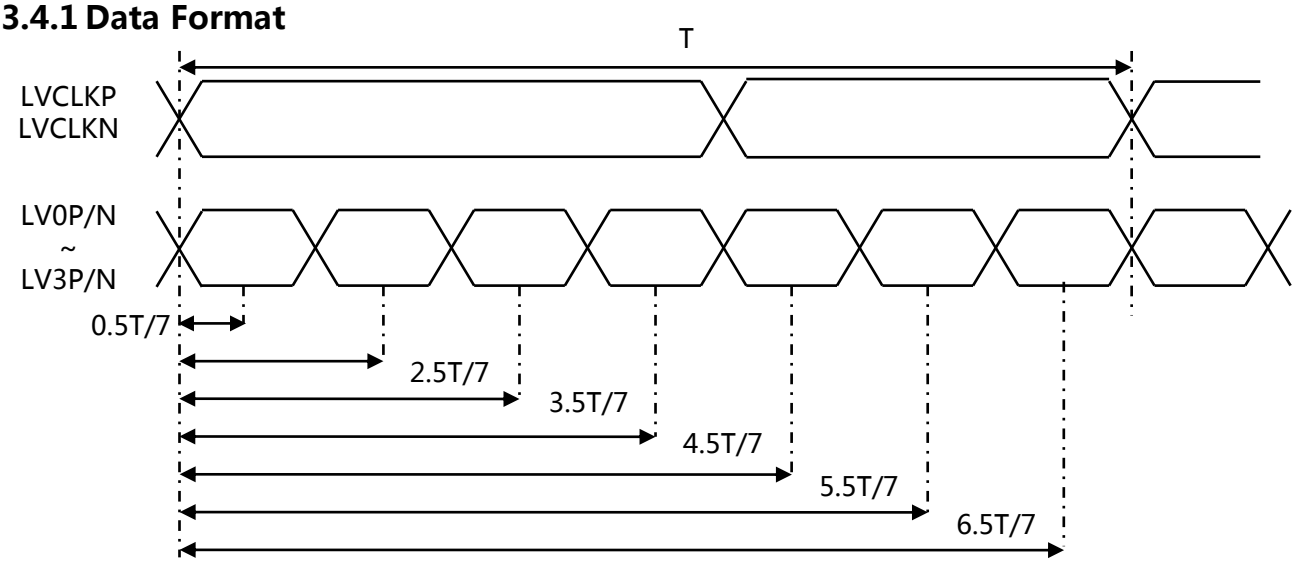

< LVDS input data ideal strobe position >

3.4.2 LVDS input data mapping

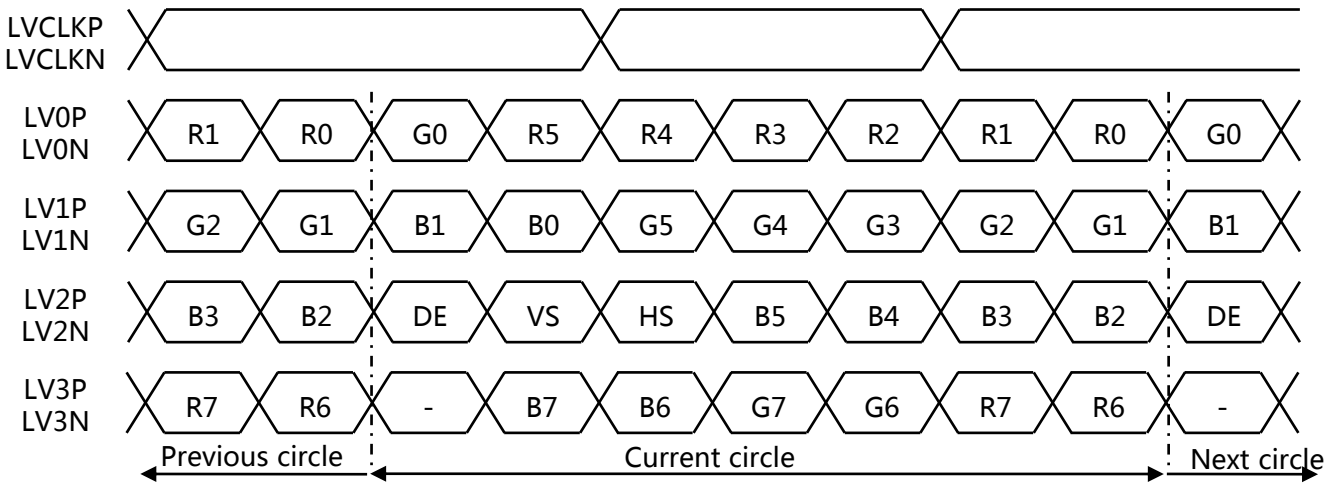

< 8 bit LVDS input data mapping >

3.4.3 DC Specification

< Table 5. DC Specification >

Parameter	Symbol	Min	Typ	Max	Unit	Condition
Supply current	I_{DD}	-	100	-	mA	
LVDS DC specifications						
Differential input high threshold	V_{TH}	-	-	+100	mV	V_{IC}=1.2V
Differential input low threshold	V_{TL}	-100	-	-	mV	
LVDS common mode voltage	V_{IC}	0.7	-	1.6	V	
LVDS swing voltage	V_{ID}	±100	-	±600	mV	
Mini-LVDS DC specifications						
Output differential voltage range	V_{OD}	±170	±200	±230	mV	PI=14KΩ RL=100Ω (T_A=25℃)
Output differential voltage deviation		TBD	-	TBD	mV	
Output offset voltage range	V_{OS}	1.0	1.2	1.4	V	
Output offset voltage deviation		TBD	-	TBD	V	

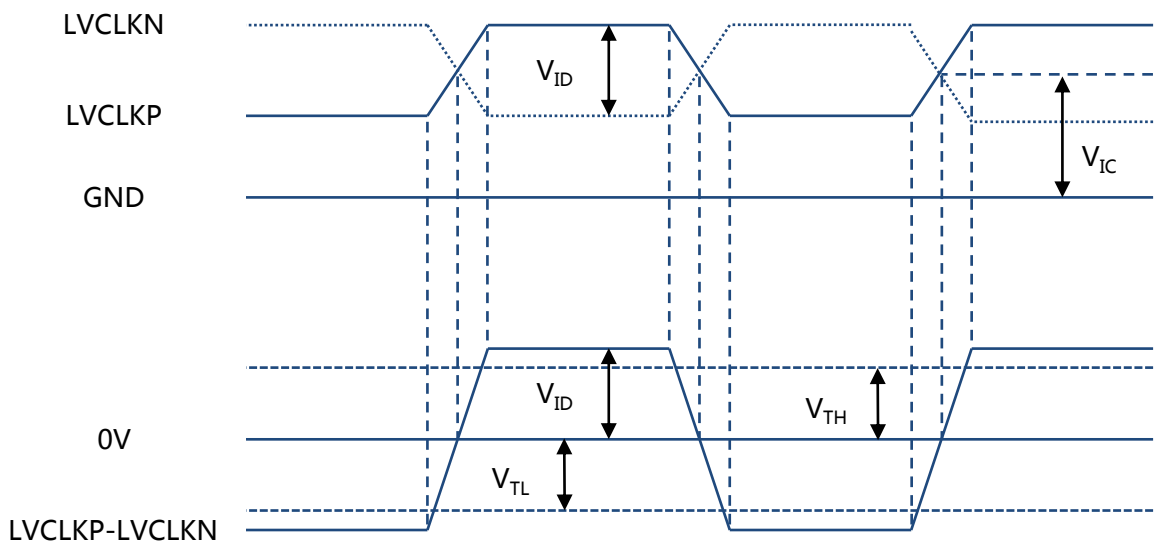

< LVDS V_{ID} and V_{IC} definition>

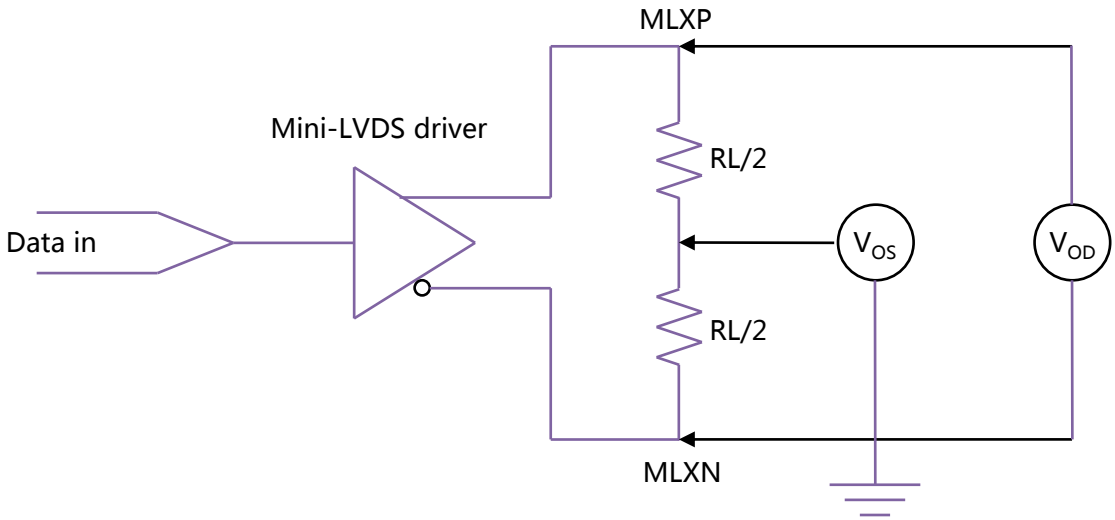

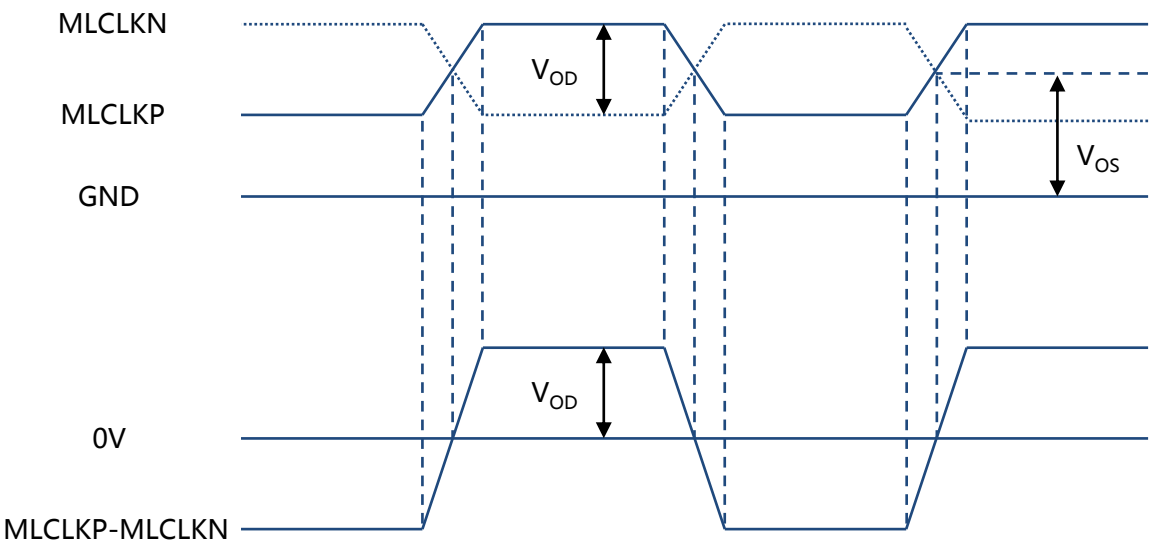

< Mini-LVDS V_{OD} and V_{OS} definition>

3.4.4 AC Specification

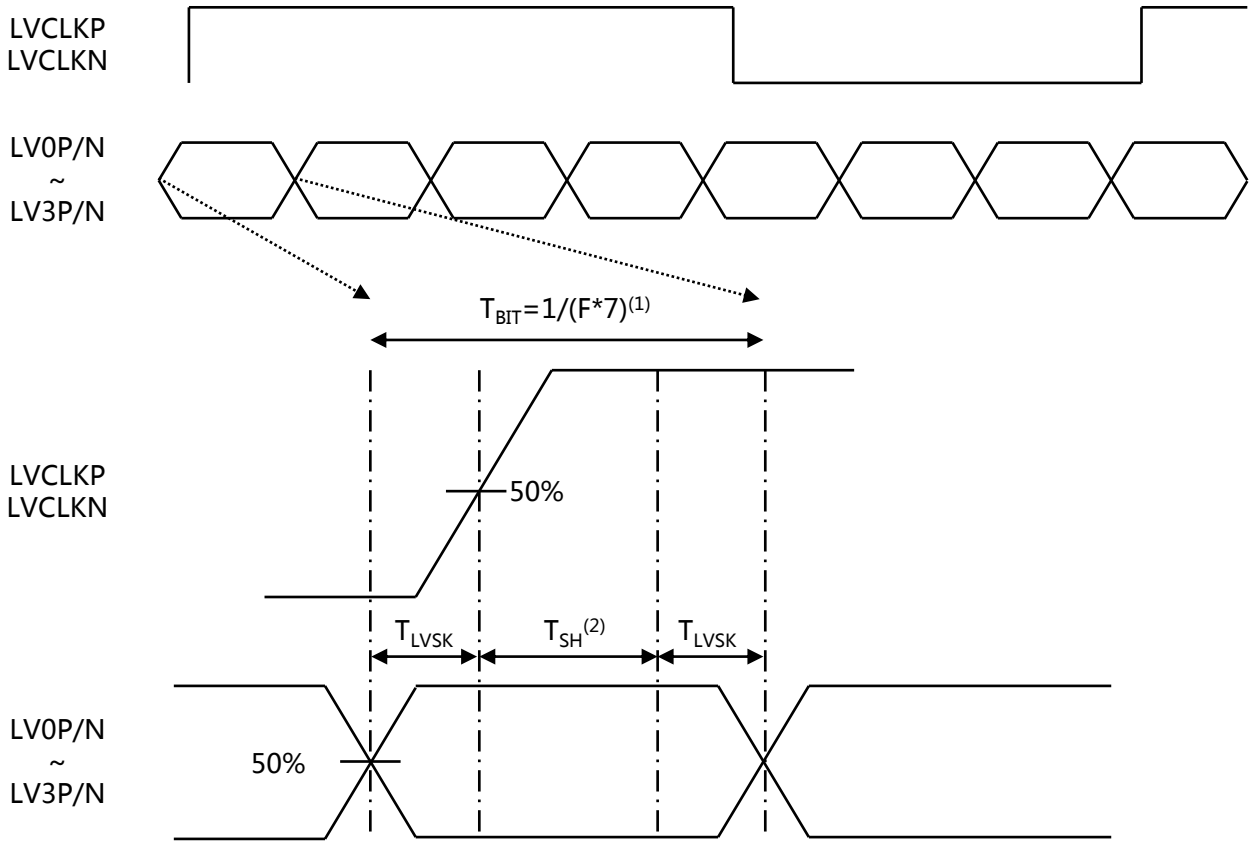

Note:
(1) T_{BIT}: Data period
(2) Internal CLK sampling data window

< LVDS channel to channel skew>

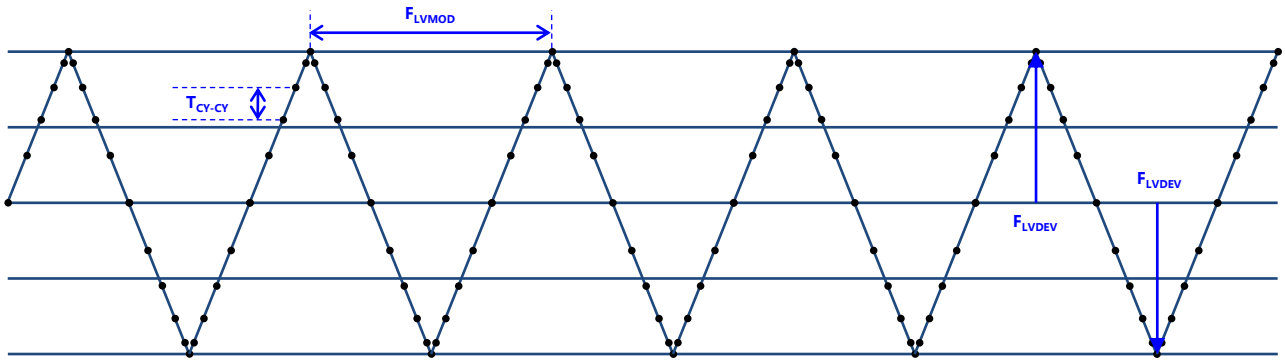

< LVDS input SSC>

< Table 6. AC Specification >

Description	Symbol	Condition	Min	Typ	Max	Unit
LVDS Input frequency	F	-	25	-	100	MHz
LVDS channel to channel skew	T_{LVSK}	F=65MHz V_{IC}=1.2V V_{ID}=±200mV	-600	-	+600	ps
Modulating frequency of input clock during SSC	F_{LVMOD}	F=85MHz V_{IC}=1.2V V_{ID}=±200mV	10	-	300	KHz
Maximum deviation of input clock frequency during SSC	F_{LVDEV}		-3	-	+3	%
Cycle to cycle jitter	T_{CY-CY}		-	-	200	ps

3.5 Interface timing Parameter

< Table 7. Timing Parameter >

Item			Symbol	min	typ	max	UNIT
LCD	Frame Rate		-	-	60	-	Hz
	Pixels Rate		-	57.5	64.9	74.4	MHz
Timing	Horizontal	Horizontal total time	tHP	1240	1344	1464	t_{CLK}
		Horizontal Active time	tHadr	1024			t_{CLK}
		Blank	HB	216	320	440	t_{CLK}
	Vertical	Vertical total time	tvp	778	806	848	t_H
		Vertical Active time	tVadr	768			t_H
		Blank	VB	10	38	80	t_H
Lane				-	1	-	Lane

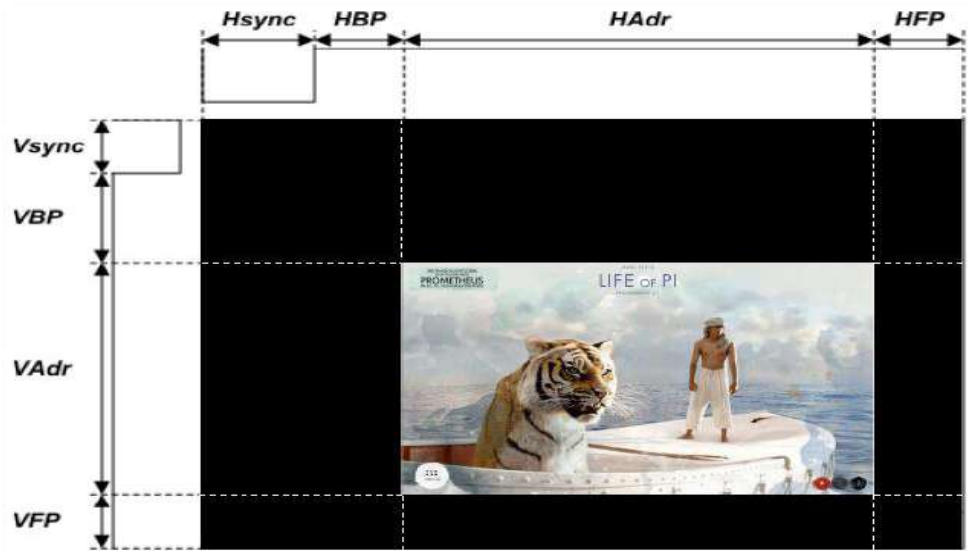

4.0 OPTICAL SPECIFICATION

4.1 Overview

The test of Optical specifications shall be measured in a dark room (ambient luminance ≤1lux and temperature = 25±2℃) with the equipment of Luminance meter system (Goniometer system and TOPCON BM-5) and test unit shall be located at an approximate distance 50cm from the LCD surface at a viewing angle of θ and Φ equal to 0°. The center of the measuring spot on the Display surface shall stay fixed.

The backlight should be operating for 30 minutes prior to measurement.

4.2 Optical Specifications

<Table 4. Optical Specifications >

Parameter		Symbol	Condition	Min.	Typ.	Max.	Unit	Remark
Viewing Angle Range	Horizontal	Θ3	CR>10	85	88	-	Deg.	Note1
		Θ9		85	88	-	Deg.	
	Vertical	Θ12		85	88	-	Deg.	
		Θ6		85	88	-	Deg.	
Contrast ratio		CR	Θ = 0°	900	1200	-		Note2
Luminance of White		Y_w	Θ = 0° (Center)	400	500	-	cd/m²	Note3
White luminance uniformity		ΔY		75	80	-	%	Note4
Transmittance		Tr		3.8	4.5	-	%	Note5
Color Gamut		CG		67	72	-	%	
Reproduction of color	Red	Rx	Θ = 0° (Center)	0.602	0.652	0.702		Note6
		Ry		0.288	0.338	0.388		
	Green	Gx		0.274	0.324	0.374		
		Gy		0.557	0.607	0.657		
	Blue	Bx		0.093	0.143	0.193		
		By		0	0.050	0.100		

Parameter	Symbol	Condition	Min.	Typ.	Max.	Unit	Remark
White Chromaticity	Wx	Θ = 0°	0.263	0.313	0.363		
	Wy		0.279	0.329	0.379		
Response Time (Rising + Falling)	$T_r + T_f$	Ta= 25° C Θ = 0°	-	25	35	ms	Note 7
LED Life time			50,000			Hrs	Note8

Note:

1.Viewing angle is the angle at which the contrast ratio is greater than 10. The viewing angles are determined for the horizontal or 3, 9 o' clock direction and the vertical or 6, 12 o' clock direction with respect to the optical axis which is normal to the LCD surface (see FIGURE 1).

2.Contrast measurements shall be made at viewing angle of Θ= 0 and at the center of the LCD surface. Luminance shall be measured with all pixels in the view field set first to white, then to the dark (black) state . (see FIGUR 1) Luminance Contrast Ratio (CR) is defined mathematically.

$$CR = \frac{\text{Luminance when displaying a white raster}}{\text{Luminance when displaying a black raster}}$$

3. Center Luminance of white is defined as the LCD surface. Luminance shall be measured with all pixels in the view field set first to white. This measurement shall be taken at the locations shown in FIGURE 2 for a total of the measurements per display.

4. The White luminance uniformity on LCD surface is then expressed as :

ΔY = (Minimum Luminance of 9points / Maximum Luminance of 9points) * 100 (See FIGURE 2).

5.Transmittance is the Value without APF and CG.

6.The color chromaticity coordinates specified in the above table shall be calculated from the spectral data measured with all pixels first in red, green, blue and white. Measurements shall be made at the center of the panel.

7.The electro-optical response time measurements shall be made as FIGURE 3 by switching the "data" input signal ON and OFF. The times needed for the luminance to change from 10% to 90% is Tr, and 90% to 10% is Tf.

8. The lifetime is determined as the time at which luminance of LED become 50% of the initial brightness or not normal lighting at IPIN=54mA on condition of continuous operating at 25 ±2°C.

Figure1 Measurement Set Up

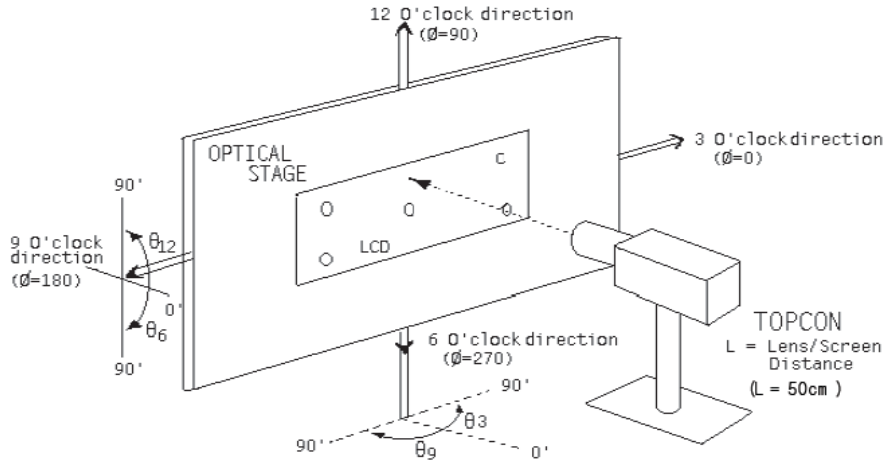

Figure2 White Luminance and Uniformity Measurement Locations (9 points)

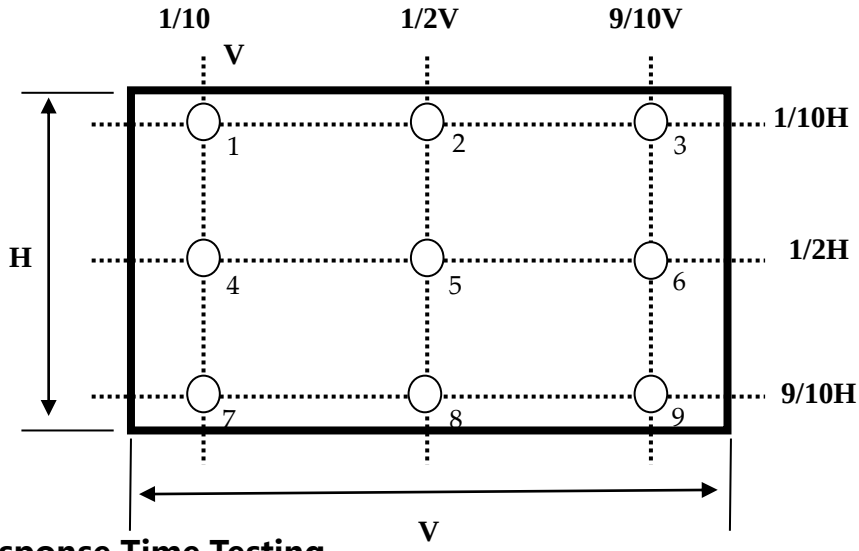

Figure3 Response Time Testing

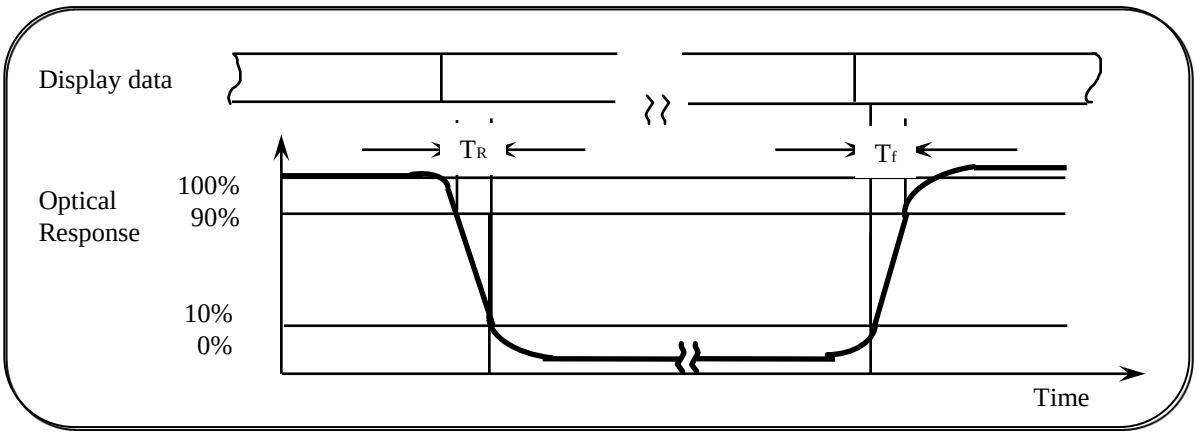

5.0 Reliability Test

The Reliability test items and its conditions are shown in below.

<Table 5. Reliability Test Parameters >

No	Test Items	Conditions
1	High temperature storage test	Ta = 80 ℃, 240 hrs
2	Low temperature storage test	Ta = -30 ℃, 240 hrs
3	High temperature & high humidity (operation test)	Ta = 60 ℃, 90%RH, 240hrs
4	Low temperature operation test	Ta = -20 ℃, 240hrs
5	High temperature operation test	Ta = 70 ℃, 240hrs
6	Thermal Shock Test	Ta = -40 ℃ ~ 80℃, 1h/Cycle, 100Cycles
7	VIB Test	10-300Hz，1.5G，10min/cycle，3 cycle each X/Y/Z
8	SHOCK Test	200G，2ms，Half sine，1time for ±X/±Y/±Z

6.0 FPC/IC Pin Assignment & Mechanical Characteristics

6.1 Dimension Requirements

Mechanical outlines for the panel **(**H: horizontal length, V: Vertical length**)**

<Table 6 Dimensional Parameters>

Parameter	ITEMS	Unit	Remark
Dimensional Outline	260.5(W)×204(V)×8.7(D)	mm	
CF size	252.36(H) × 191.52(V)	mm	
Active area	245.76(H) ×184.32(V)	mm	
Border(L/R/U/D)	3.25/3.35/3.7/3.5	mm	
Number of pixels	1024(H) x768 (V)	pixels	
	1pixel=R+G+B dots		
Pixel pitch(Dot)	80(H) x240 (V)	um	
Pixel Arrangement	1P2D		
Pad Area	3.5(Data)/2.5(Gate)	mm	
Glass Edge to FPC	0.3	mm	
FPC Pad Width	0.8	mm	
FPC to D-IC	0.5	mm	
D-IC Width	0.93	mm	
D-IC to CF Edge	0.97	mm	

6.2 LC Align Direction & Pol absorption axis

Figure3 The TFT and CF LC Align Direction

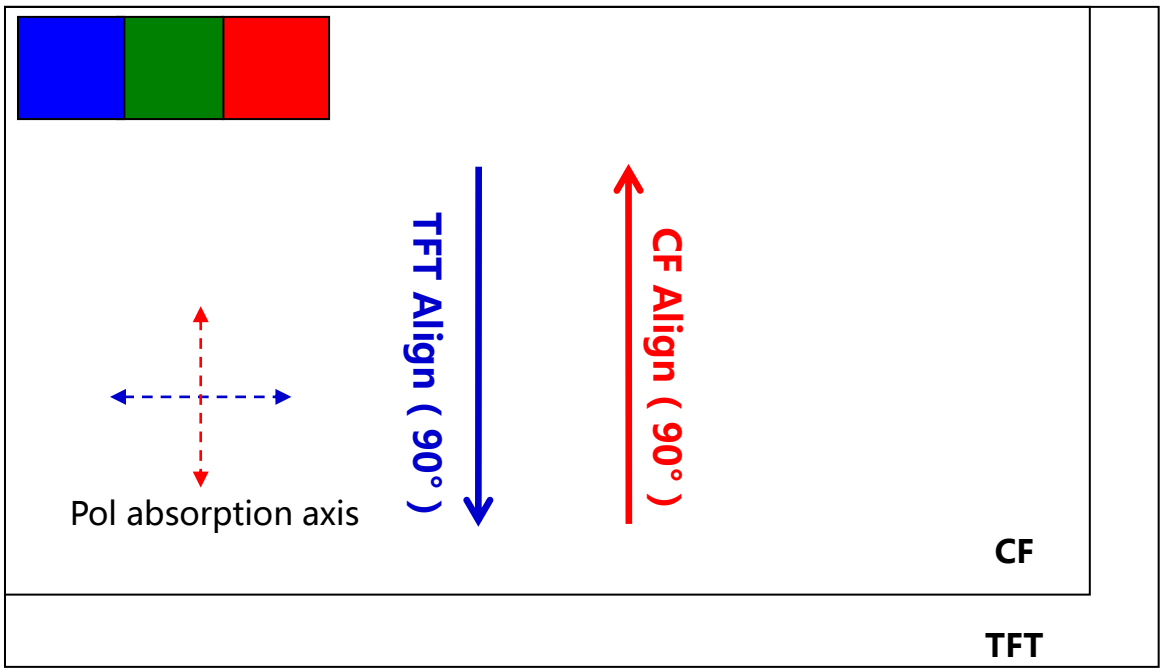

Pol absorption axis

Shown in Figure3, CF pol absorption axis is parallel with CF align direction(0°) , TFT pol absorption axis is vertical with TFT align direction (90°)

6.3 Outline Dimension (unit : mm)

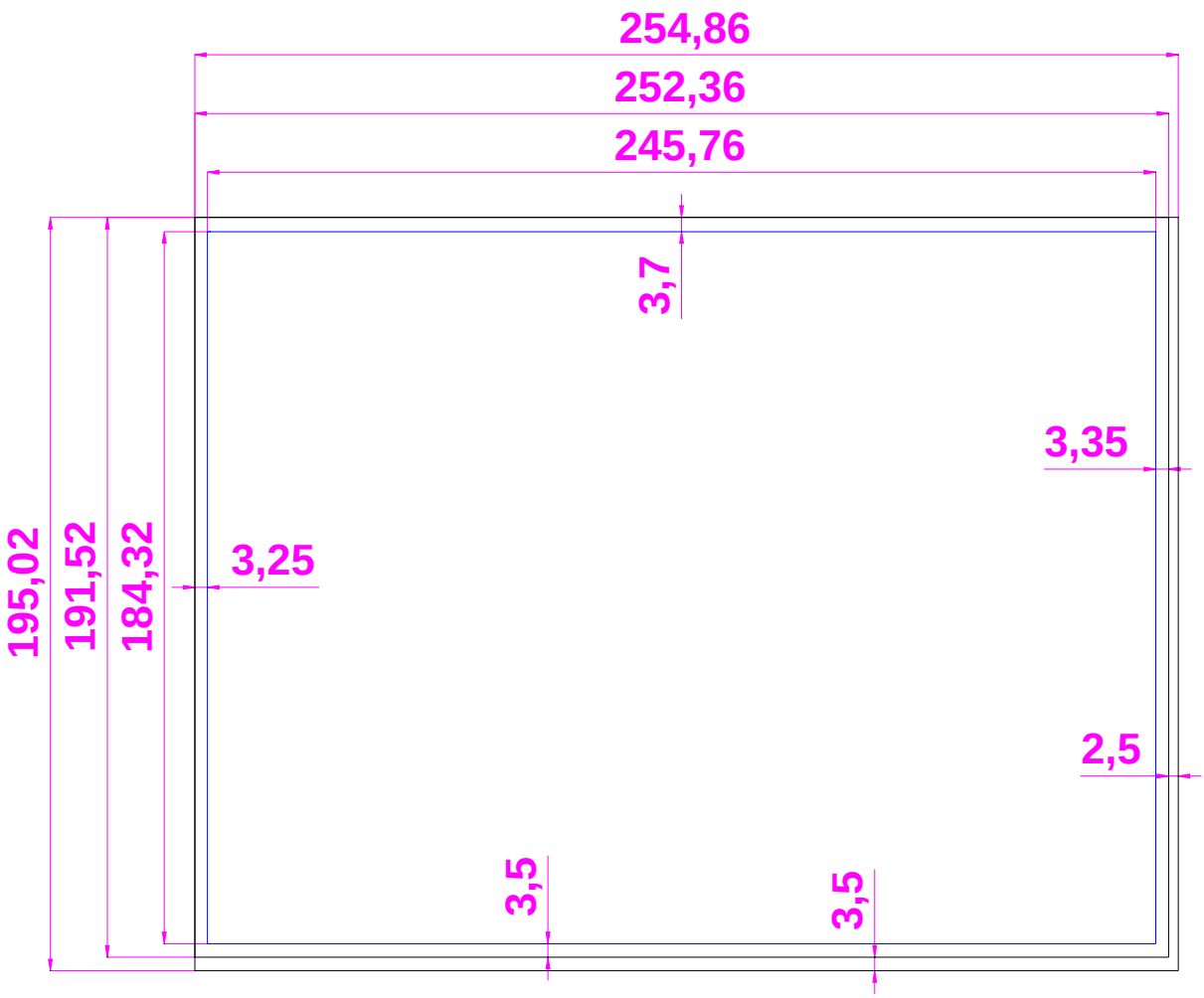

6.4 IC & FPC Position Information(unit : mm)

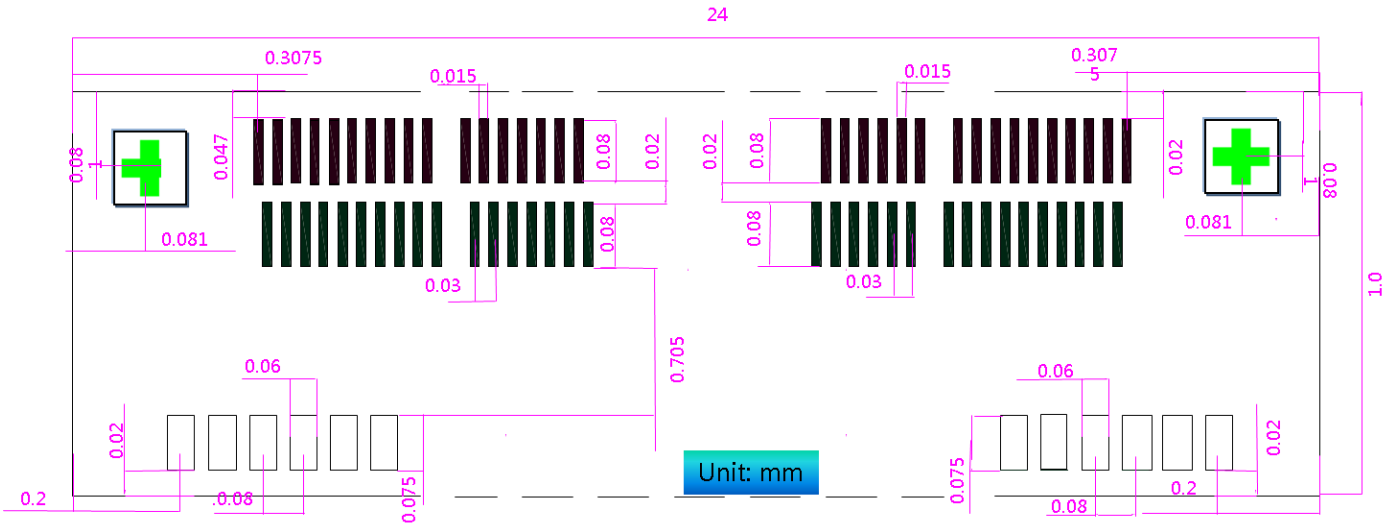

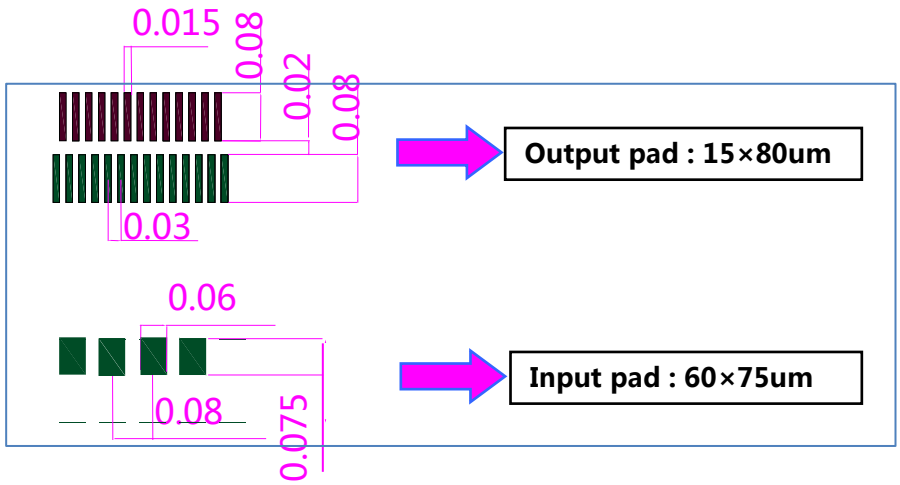

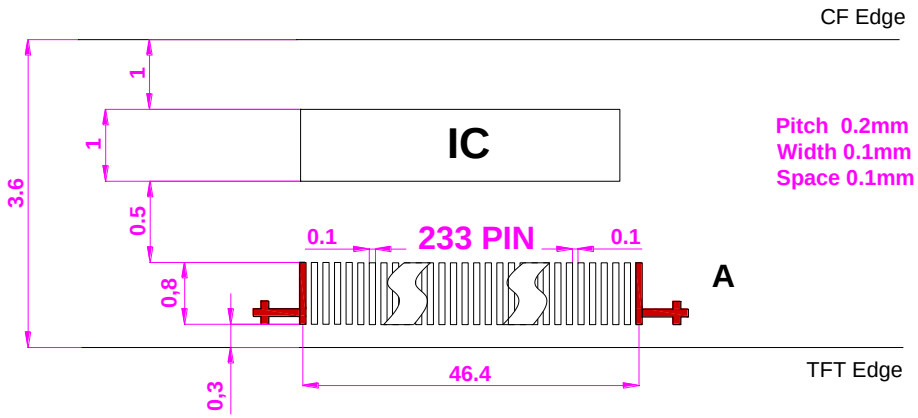

6.5 Connector Pin Assignment

6.5.1 LCD panel signal

LCD Interface connector: PM.CON.13076B2001 (巨铖光电科技有限公司)

Pin	Name	Description
1	RX3+	Differential Data Input,CH3(Positive)
2	RX3-	Differential Data Input,CH3(Negative)
3	NC	
4	NC	
5	GND	Ground
6	RXC+	Differential Clock Input(Positive)
7	RXC-	Differential Clock Input(Negative)
8	GND	Ground
9	RX2+	Differential Data Input,CH2(Positive)
10	RX2-	Differential Data Input,CH2(Negative)
11	GND	Ground
12	RX1+	Differential Data Input,CH1(Positive)
13	RX1-	Differential Data Input,CH1(Negative)
14	GND	Ground
15	RX0+	Differential Data Input,CH0(Positive)
16	RX0-	Differential Data Input,CH0(Negative)
17	reLR	Horizontal Reverse Scan Control, Low or NC->Normal Mode High->Horizontal Reverse Scan
18	reUD	Vertical Reverse Scan Control, Low or NC->Normal Mode High->Vertical Reverse Scan
19	VCC	Power
20	VCC	Power

6.5.2 LED Driver

LED Interface connector: 91208-01001-H01 (ACES)

Pin	Name	Description
1	VI	12V
2	VI	12V
3	VI	12V
4	VI	12V
5	GND	Ground
6	GND	Ground
7	GND	Ground
8	GND	Ground
9	EN	Enable, 3.3V
10	ADJ	Backlight Adjust, PWM Dimming(190-210Hz, 3.3V)

6.6 Cell Test Pad(unit : mm)

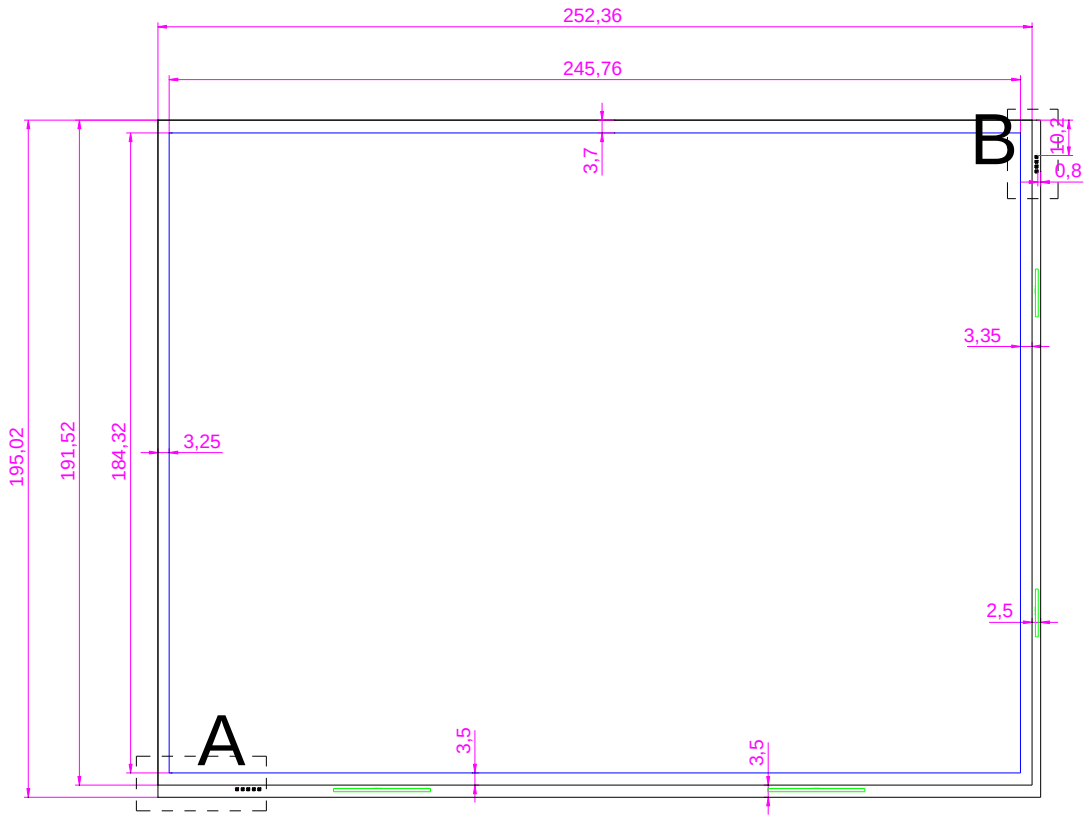

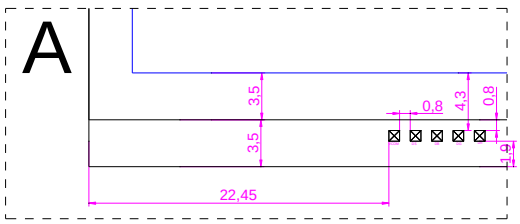

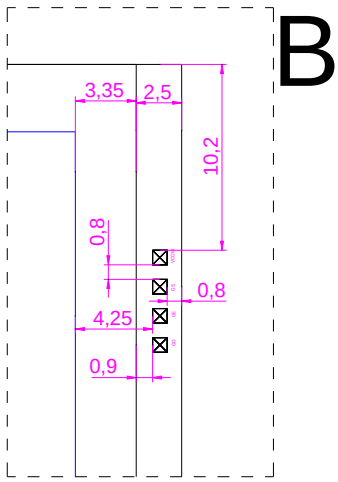

ET Test Pad :

A (左侧) VCOM DS DB DG DR B (右上侧) VCOM GS GE GO

7.0 PACKING INFORMATION

7.1 Packing Description

Packing Condition	Contents
Packing Type	Tray packing type (See the picture under the form)
Material Model	PET（$1*10^4\Omega < R < 1*10^9\ \Omega$）
Number of LCM per Tray	1 pcs
Stacking Mode	3+1（Superposition）
Number of LCM per Box	18 pcs

7.2 Tray Drawing

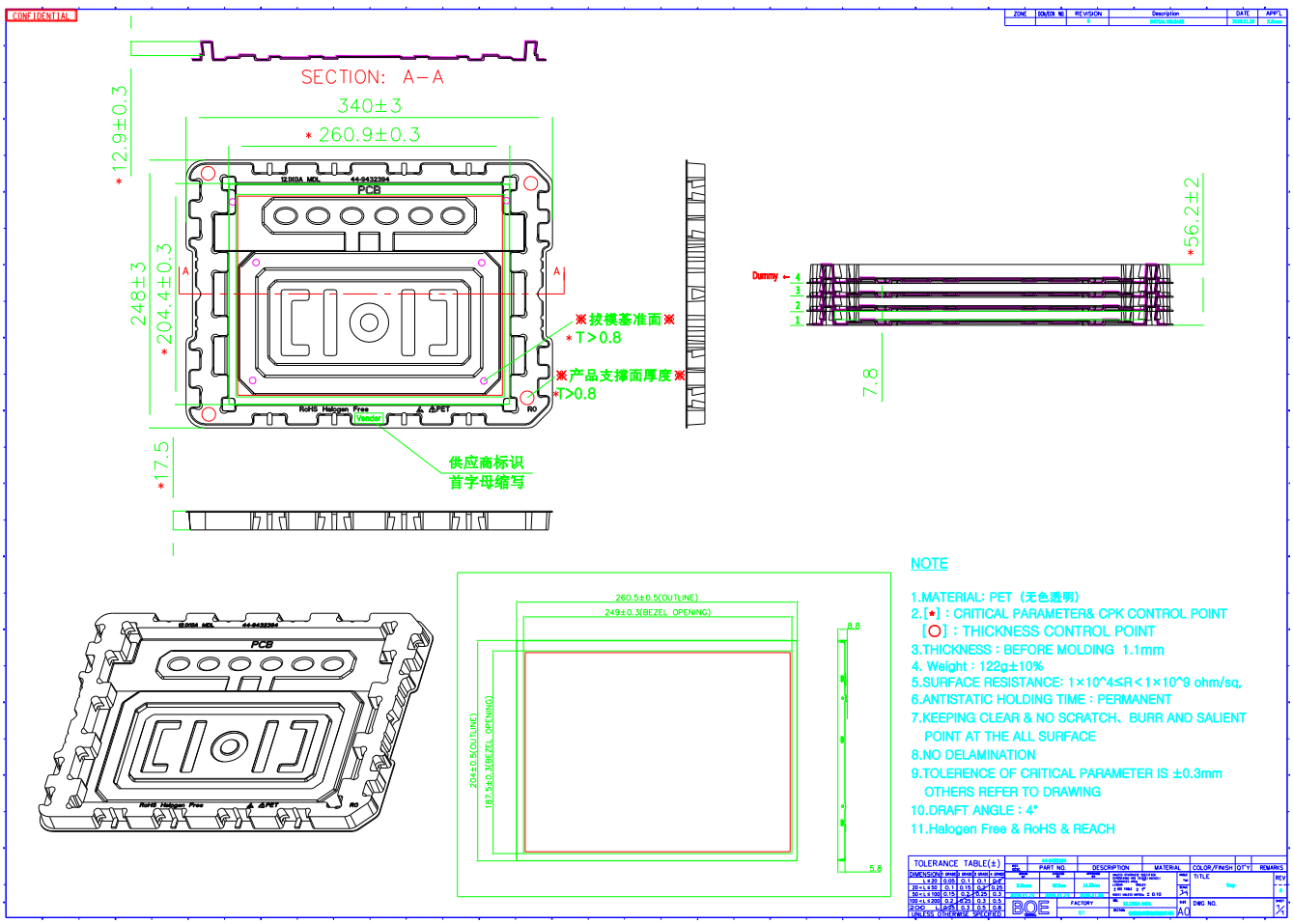

7.0 PACKING INFORMATION

7.3 Product label

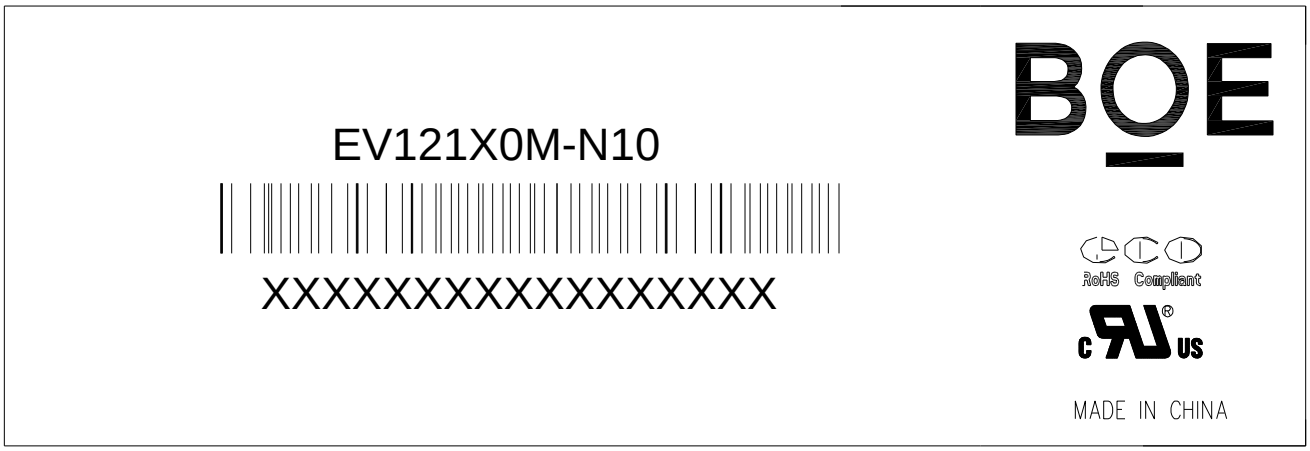

1	2	3	4	5	6	7
X X	X	X	X X	X	X X X X	X X X X X X

Type designation

No 1. Control Number

No 2. Rank / Grade

No 3. Line classification (RMA – C, Others – A)

No 4. Year (10 : 2010, 11: 2011, Last two bits of year)

No 5. Month (1-9, X, Y, Z)

No 6. Product Identification (Last four bits of FG-Code)

No 7. Serial Number(0-9, A-F)

7.0 PACKING INFORMATION

7.4 Inner Box Label Format

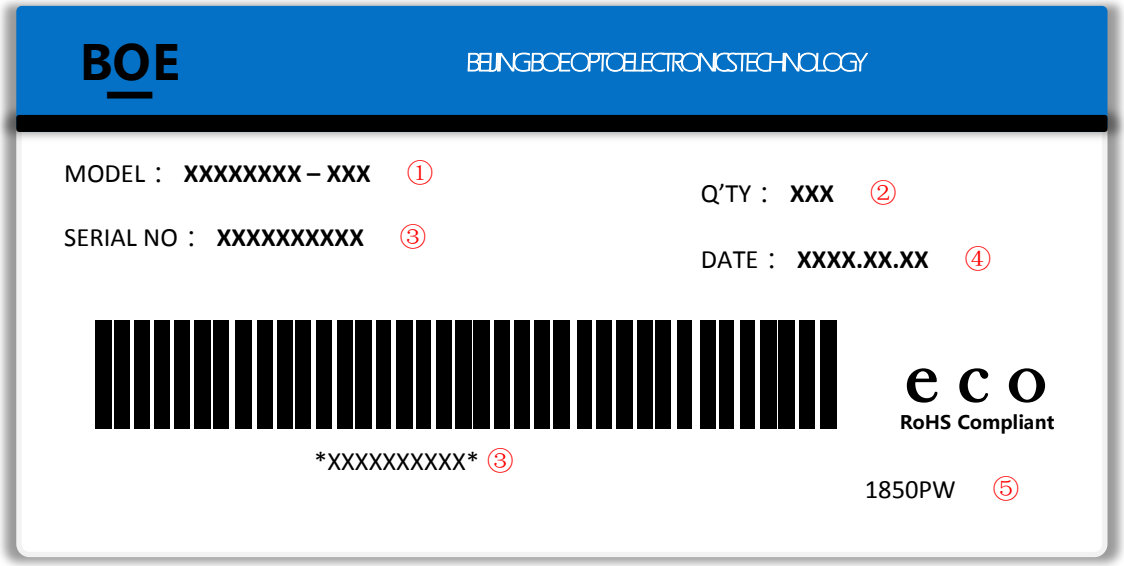

Serial number marked part needs to print, show as follows:

1. FG-CODE(Before 12 bit) --- EV121X0M-N10
2. Product quantity---3
3. Box ID
4. Date
5. FG-Code After four +Product Grade + Revision Code---1850PW

Total Size:110×56mm

Box Label Naming Rule ：

Digit / Code	1	2	3	4	5	6	7	8	9	10
Code	0	2	8	1	8	8	0	0	0	1
Description	Product Model			Year		Month (0,-9 , XYZ)	Box Serial Number			

7.0 PACKING INFORMATION

7.5 Outer Box Label Format

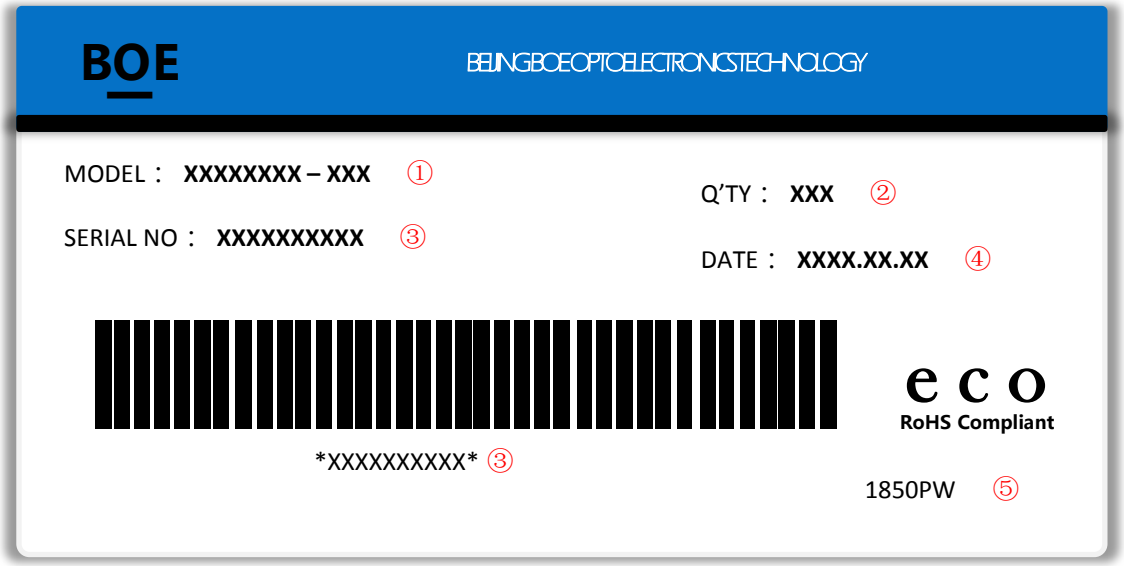

Serial number marked part needs to print, show as follows:

1. FG-CODE(Before 12 bit) --- EV121X0M-N10
2. Product quantity---18
3. Box ID
4. Date
5. FG-Code After four +Product Grade + Revision Code---1850PW

Total Size:110×56mm

Box Label Naming Rule ：

Digit / Code	1	2	3	4	5	6	7	8	9	10
Code	0	2	8	1	8	8	0	0	0	1
Description	Product Model			Year		Month (0,-9 , XYZ)	Box Serial Number			

7.0 PACKING INFORMATION

7.6 Pallet Label Format

Serial number marked part needs to print, show as follows:

1. FG-CODE(Before 12 bit) --- EV121X0M-N10
2. Product quantity---288
3. Packing Date
4. Pallet ID
5. FG-Code After four +Product Grade + Revision Code---1850PW

Total Size:100×80mm

Pallet Label Naming Rule :

Digit Code	1	2	3	4	5	6	7	8	9	10	11	12
Code	2	0	1	8	8	7	B	0	0	0	0	1
Description	Year				Month (0,-9 , XYZ)	MODEL TYPE		Box Serial Number				

7.0 PACKING INFORMATION

7.7 Packing Process

将MDL放入Tray中，每个MDL上放一片Spacer。 1 MDL/Tray	将盛装MDL的Tray叠码3层，然后整叠Tray上面加放1个空Tray作盖。（真空堆码） 3 MDL/4 Tray	用美纹胶带平行于Tray的宽边方向捆绑两道，每道至少缠绕3层。
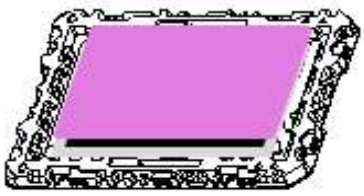 Step 1	Step 2	Step 3
将4层Tray放入一个Shielding Bag内，并抽真空。（真空标准参考Appendix） 3 MDL/Shielding Bag	将1pcs Cushion置于Inner Box内部底层，再将封口完好的一包产品放入Inner Box中。	用封箱胶带对Inner Box进行封箱，并在Box的Mark框处粘贴Box标签。 3 MDL/Inner Box
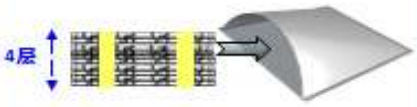 Step 4	Step 5	Step 6
将封好的Inner Box装入Outer Box。 6 Inner Box/Outer Box	采用“H”形封箱方式，对Box进行封箱，并在Box的Mark处粘贴相应Box标签。 18 MDL/Outer Box	按“田”字型对Outer Box进行码垛，并粘贴Pallet标签（标签粘贴位置详见Label and Position）。 16 Outer Box/Pallet
Step 7	Step 8	Step 9
放置护角、缠绕拉伸膜，缠绕层数不少于3层，除底面外的5个面需要全部覆盖。 288 MDL/Pallet	用打包带打包，长、宽、高边各打2道打包带。 288 MDL/Pallet	
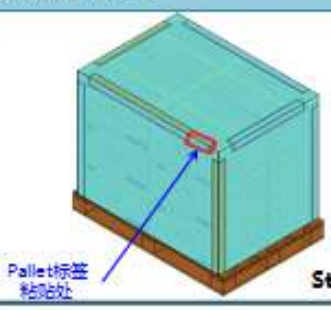 Step 10	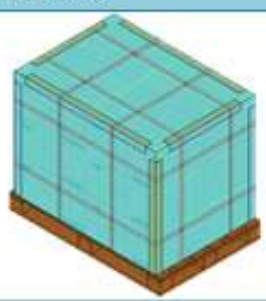 Step 11	

8.0 MECHANICAL OUTLINE DIMENSION

Figure 6 TFT-LCD Module Outline Dimension (Front View)

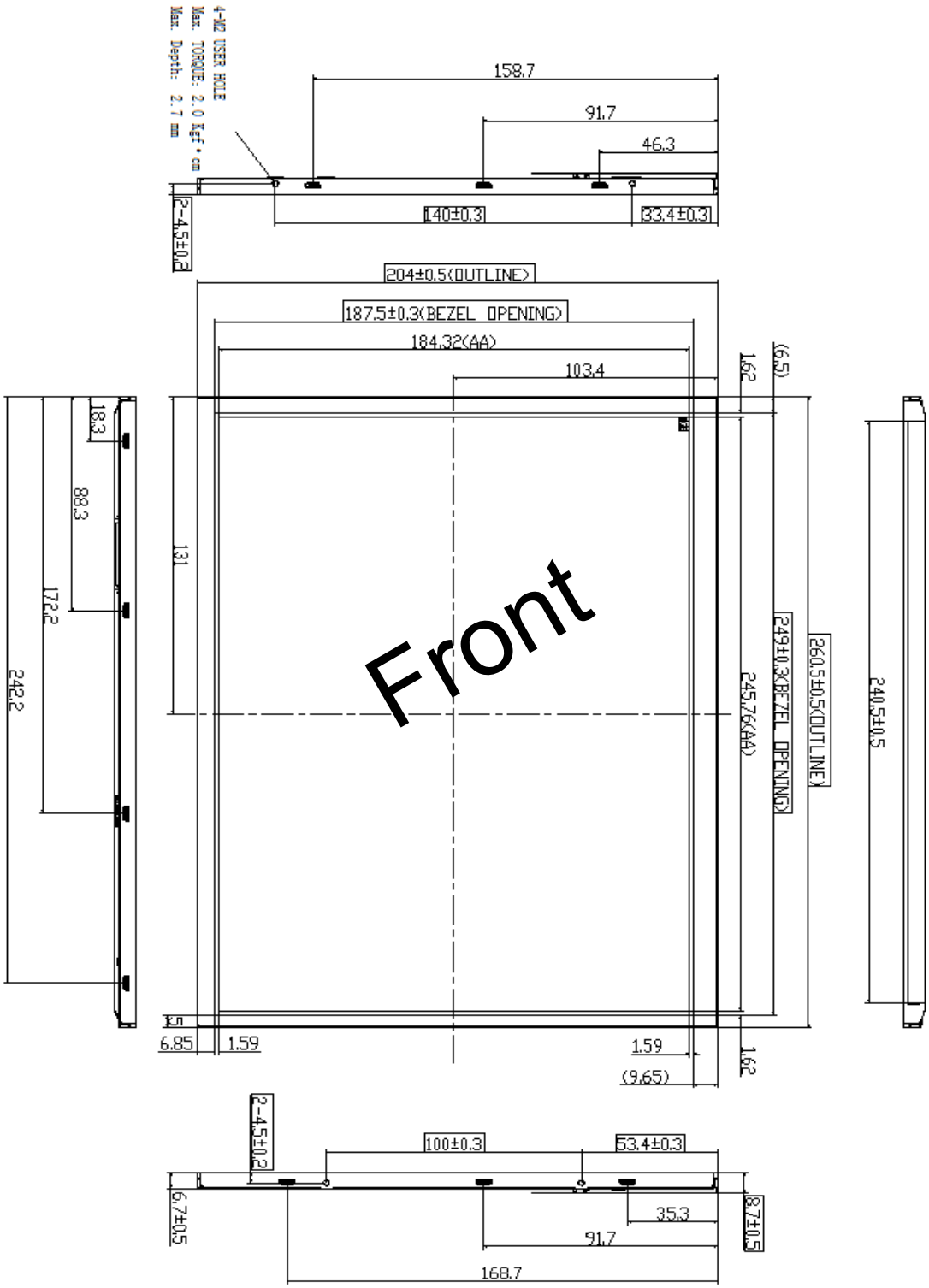

Figure 7 TFT-LCD Module Outline Dimension (Rear View)

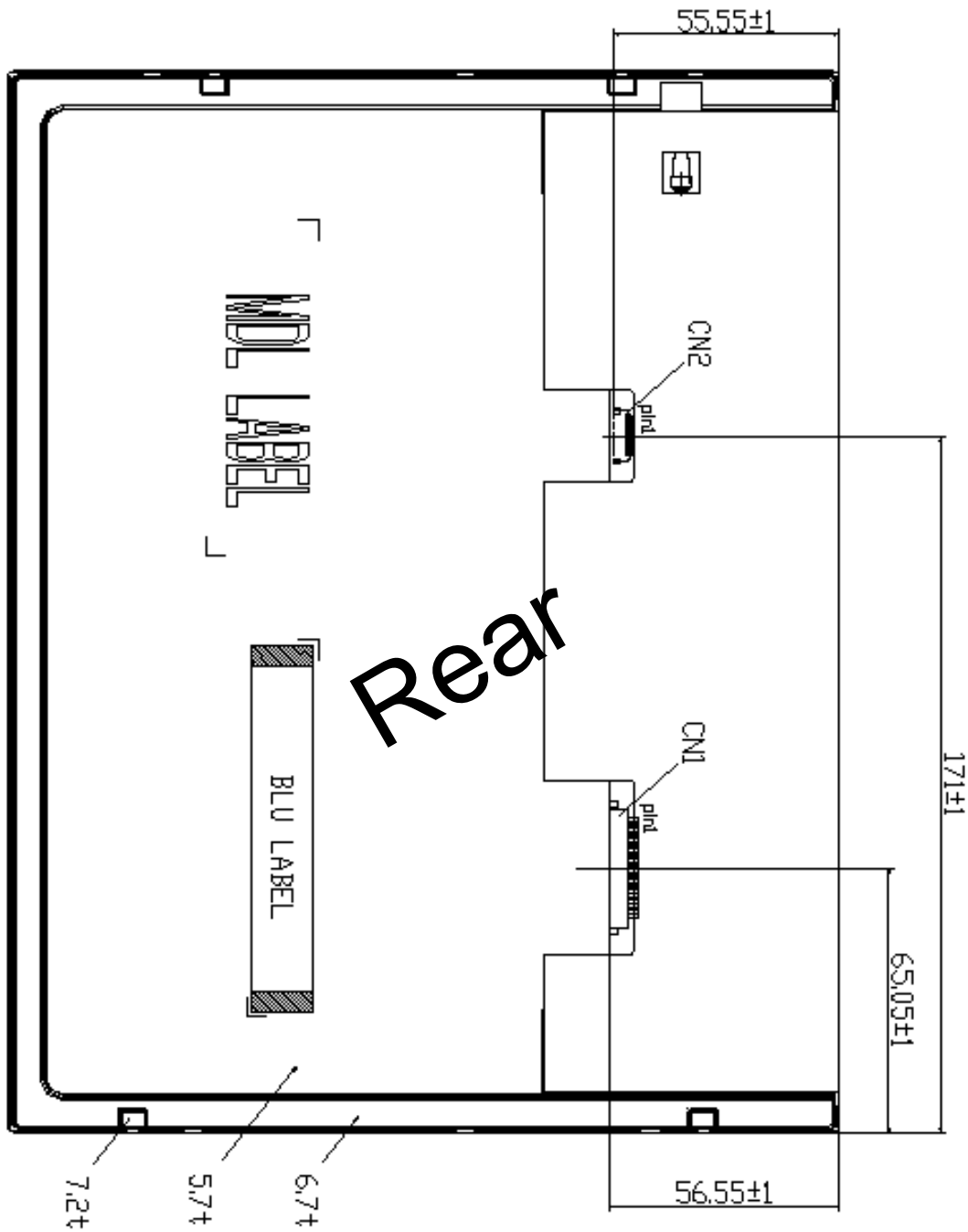

9.Handling & Cautions

9.1 Mounting Method

- The panel of the LCD consists of two thin glasses with polarizers which easily get damaged. So extreme care should be taken when handling the LCD.
- Excessive stress or pressure on the glass of the LCD should be avoided, and avoid scratching polarizer (The strength should not be more than that of HB pencil). Care must be taken to insure that no torsional or compressive forces are applied to the LCD unit when it is mounted.
- If the customer's set presses the main parts of the LCD, the LCD may show the abnormal display. But this phenomenon does not mean the malfunction of the LCD and should be pressed by the way of mutual agreement.
- To determine the optimum mounting angle, refer to the viewing angle range in the specification for each model.
- Mount a LCD module with the specified mounting parts.
- Avoid stressing PCB and Driver IC during the installation.
- Drawing or bending of the COF & wire in any process is avoided.
- Careful installation and handling are necessary to prevent damage to PCB circuit .
- Installation of heat dissipation structure should meet the temperature requirements.
- Touching or rubbing the POL surface with bare hands or oilcloth is not allowed.

9.2 Caution of LCD Handling and Cleaning

- Since the LCD is made of glass, do not apply strong mechanical impact or static load onto it. Handling with care since shock, vibration , and careless handling may seriously affect the product. If it falls from a high place or receives a strong shock, the glass may be broken.
- The polarizers on the surface of panel are made from organic substances. Be very careful for chemicals not to touch the polarizers or it leads the polarizers to be deteriorated.
- If the use of a chemical is unavoidable, use soft cloth with solvent (recommended below) to clean the LCD 's surface with wipe lightly.
  -IPA(Isopropyl Alcohol), Ethyl Alcohol, Trichlorotriflorothane
- Do not wipe the LCD's surface with dry or hard materials that will damage the polarizers and others. Do not use the following solvent.
  -Water, Ketone, Aromatics

- It is recommended that the LCD be handled with soft gloves during assembly, etc. The polarizers on the LCD's surface are vulnerable to scratch and thus to be damaged by sharp particles.
- Do not drop water or any chemicals onto the LCD's surface.
- A protective film is supplied on the LCD and should be left in place until the LCD is required for operation.
- The ITO pad area needs special careful caution because it could be easily corroded. Do not contact the ITO pad area with HCFC,Soldering flux,Chlorine,Sulfur,saliva or fingerprint. To prevent the ITO corrosion, customers are recommended that the ITO area would be covered by UV or silicon.
- Water/oil stains should be wiped immediately to prevent stains pollution and discoloration
- Surface dust could be wiped by hydrophilic cotton cloth or other soft materials (such as the light gasoline solvent soaked suede). The adherent dust should be cleaned by recommended n-hexane instead of acetone, ethanol and toluene, etc.

9.3 Caution Against Static Charge

- The LCD modules use C-MOS drivers, so customers are recommended that any unused input terminal would be connected to Vdd or Vss, do not input any signals before power is turn on, and ground you body, work/assembly area, assembly equipments to protect against static electricity.
- Remove the protective film slowly, keeping the removing direction approximate 30-degree not vertical from panel surface, If possible, under ESD control device like ion blower, and the humidity of working room should be kept over 50%RH to reduce the risk of static charge. The person who will tear off the protection film should wear anti-static wristband and the wristband should be grounded.
- Avoid the use work clothing made of synthetic fibers. We recommend cotton clothing or
other conductivity-treated fibers.
- In handling the LCD, wear non-charged material gloves. And the conducting wrist to the earth and the conducting shoes to the earth are necessary.
- Grounding and shielding actions should be adopted to avoid electromagnetic interference.
- Connection line between the system board and PCB CNT should be as short as possible.
- Connectors are precise devices for connecting PCB and transmitting electrical signals. Operators should insert and unplug the pin connectors parallelly when assembling MDL.
- Bare-handed touching of the pin connector is not allowed.
- Stay away from the static electricity to avoid electrostatic damage.

9.4 Caution For operation

- It is indispensable to drive the LCD within the specified voltage limit since the higher Voltage than the limit causes the shorter LCD's life. An electro-chemical reaction due to DC causes undesirable deterioration of the LCD so that the use of DC drive should avoid.
- Do not connect or disconnect the LCD to or from the system when power is on.
- Never use the LCD under abnormal conditions of high temperature and high humidity.
- When expose to drastic fluctuation of temperature (hot to cold or cold to hot) ,the LCD may be affected; Specifically, drastic temperature fluctuation from cold to hot ,produces dew on the LCD's surface which may affect the operation of the polarizer and the LCD.
- Response time will be extremely delayed at lower temperature than the operating temperature range and on the other hand at higher temperature LCD may turn black at temperature above its operational range. However those phenomena do not mean malfunction or out of order with the LCD. The LCD will revert to normal operation once the temperature returns to the recommended temperature range for normal operation.
- Do not display the fixed pattern for a long time because it may develop image sticking due to the LCD structure. If the screen is displayed with fixed pattern, use a screen saver.
- Consultation is necessary if a long-time use for the same pattern were required.
- Consultation is necessary when under the non-specified using conditions.
- Extreme operating conditions (high temperature, high humidity, high altitude, special display mode, running time, etc.) should be consulted with the manufacturer, otherwise, reliability of the function may not be guaranteed. Extreme condition usually occurs at airports, stations, banks, stock markets, control systems, etc.
- Specified parameters can not be exceeded. (power supply voltage, input voltage, ambient temperature, etc.)
- Consultation is necessary for a long-time operation.
- Consultation is necessary for outdoor application
- Consultation is necessary when using the vertical mode. (The MDL should be rotated clockwise when using the vertical mode.)

9.5 Packaging

- Modules use LCD element, and must be treated as such.
  -Avoid intense shock and falls from a height.
  -To prevent modules from degradation, do not operate or store them exposed directly to sunshine or high temperature/humidity for long periods.

9.6 Storage

- A slight dew depositing on terminals is a cause for electro-chemical reaction resulting in terminal open circuit. Relative humidity of the environment should therefore be kept below 60%RH.
- Original protective film should be used on LCD’ s surface (polarizer). Adhesive type protective film should be avoided, because it may change color and/or properties of the polarizers.
- Do not store the LCD near organic solvents or corrosive gasses.
- Keep the LCD safe from vibration, shock and pressure.
- Black or white air-bubbles may be produced if the LCD is stored for long time in the lower temperature or mechanical shocks are applied onto the LCD.
- In the case of storing for a long period of time for the purpose or replacement use, the following ways are recommended.
  -Store in a polyethylene bag with sealed so as not to enter fresh air outside in it.
  -It is recommended to be stored in a ventilated dark room to avoid illumination, UV-light and moisture entering and avoid water vapor entering.
  -Keep temperature in the specified storage temperature range. Recommended storage temperature range：5-40℃，Environment humidity：35-75%RH，Recommended storage time length：≤6 Mons。It was recommended that baking process should be done after the product has been stored for a certain period of time. The suggestions are as follows:
  ①. NO processing is needed when the storage period is less than 2 months;
  ②. 50 C, 10% RH, 24 hr baking process is needed when the storage period is during 2-3 months;
  ③. 50 C. 10% RH, baking 48 hr baking process is needed when the storage period 。
  -Store with no touch on polarizer surface by the anything else. If possible, store the LCD in the packaging situation LCD when it was delivered.

9.7 Safety

- For the crash damaged or unnecessary LCD, it is recommended to wash off liquid crystal by either of solvents such as acetone and ethanol an should be burned up later.
- In the case the LCD is broken, watch out whether liquid crystal leaks out or not. If your hands touch the liquid crystal, wash your hands cleanly with water an soap as soon as possible.
- If you should swallow the liquid crystal, first, wash your mouth thoroughly with water, then drink a lot of water and induce vomiting, and then, consult a physician.
- If the liquid crystal should get in your eyes, flush your eyes with running water for at least fifteen minutes.
- If the liquid crystal touches your skin or clothes, remove it and wash the affected part of your skin or clothes with soap and running water.