1 2 3 4

A B C D

Title

Size
A4

Number

Revision

Date: 5/24/2025

Sheet of

File: D:\DDA\..\[00] - BLOCK DIAGRAM.SchDoc

Drawn By:

1 2 3 4

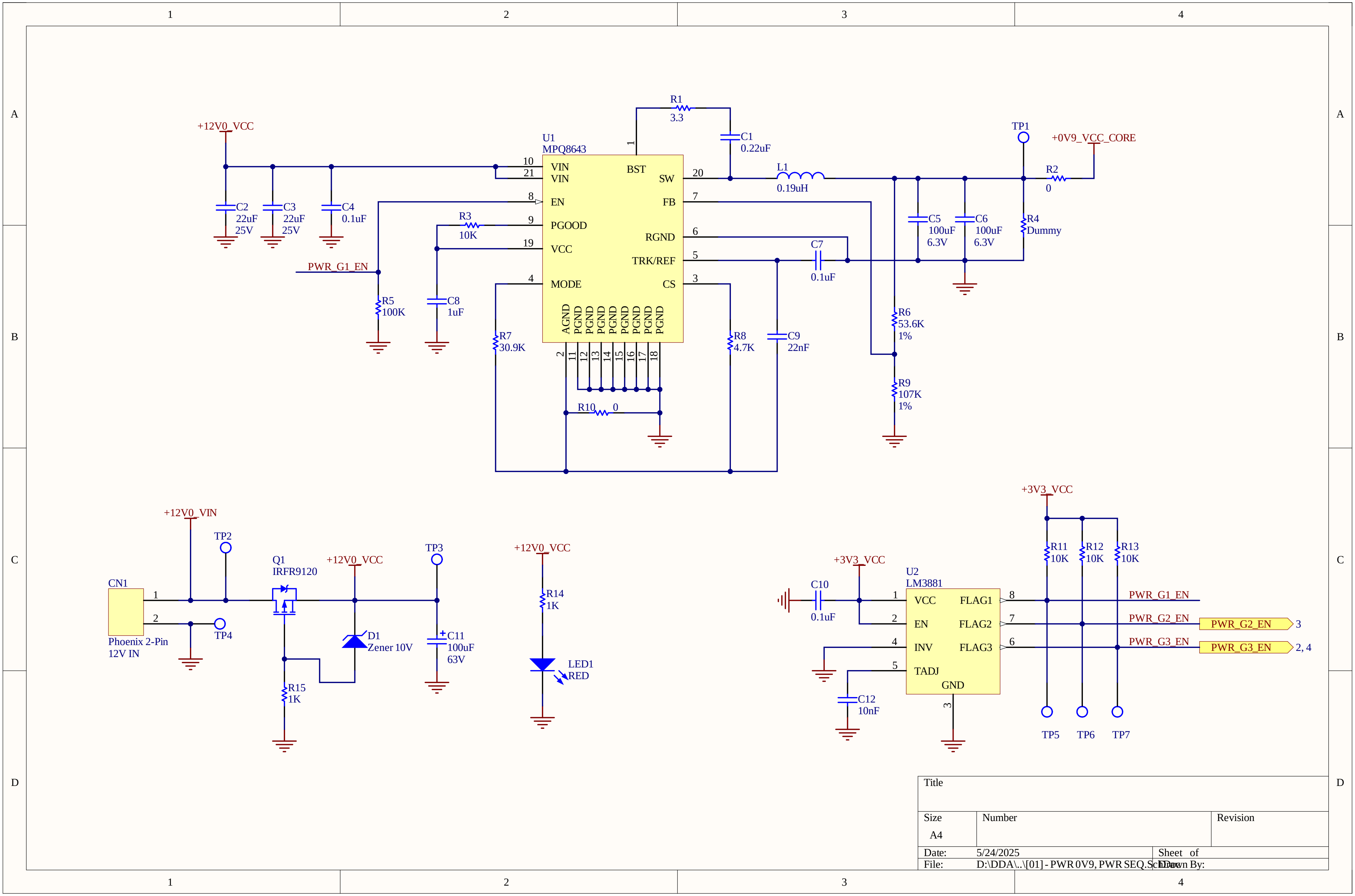
1
2
3
4
A
B
C
D
+12V0_VCC
C2
22uF
25V
C3
22uF
25V
C4
0.1uF
PWR_G1_EN
R5
100K
R3
10K
C8
1uF
U1
MPQ8643
10
21
8
9
19
4
VIN
VIN
EN
PGOOD
VCC
MODE
BST
SW
FB
RGND
TRK/REF
CS
1
20
7
6
5
3
AGND
PGND
PGND
PGND
PGND
PGND
PGND
PGND
PGND
2
11
12
13
14
15
16
17
18
R7
30.9K
R10
0
R8
4.7K
C9
22nF
R1
3.3
C1
0.22uF
L1
0.19uH
C7
0.1uF
C5
100uF
6.3V
C6
100uF
6.3V
TP1
+0V9_VCC_CORE
R2
0
R4
Dummy
R6
53.6K
1%
R9
107K
1%
+12V0_VIN
TP2
CN1
1
2
Phoenix 2-Pin
12V IN
TP4
Q1
IRFR9120
+12V0_VCC
D1
Zener 10V
R15
1K
TP3
C11
100uF
63V
+12V0_VCC
R14
1K
LED1
RED
+3V3_VCC
R11
10K
R12
10K
R13
10K
+3V3_VCC
C10
0.1uF
U2
LM3881
1
2
4
5
VCC
EN
INV
TADJ
GND
3
FLAG1
FLAG2
FLAG3
8
7
6
C12
10nF
PWR_G1_EN
PWR_G2_EN
PWR_G3_EN
PWR_G2_EN
3
PWR_G3_EN
2, 4
TP5
TP6
TP7

Title

Size
A4

Number

Revision

Date: 5/24/2025

Sheet of

File: D:\DDA\..\[01] - PWR 0V9, PWR SEQ.SchDoc

Drawn By:

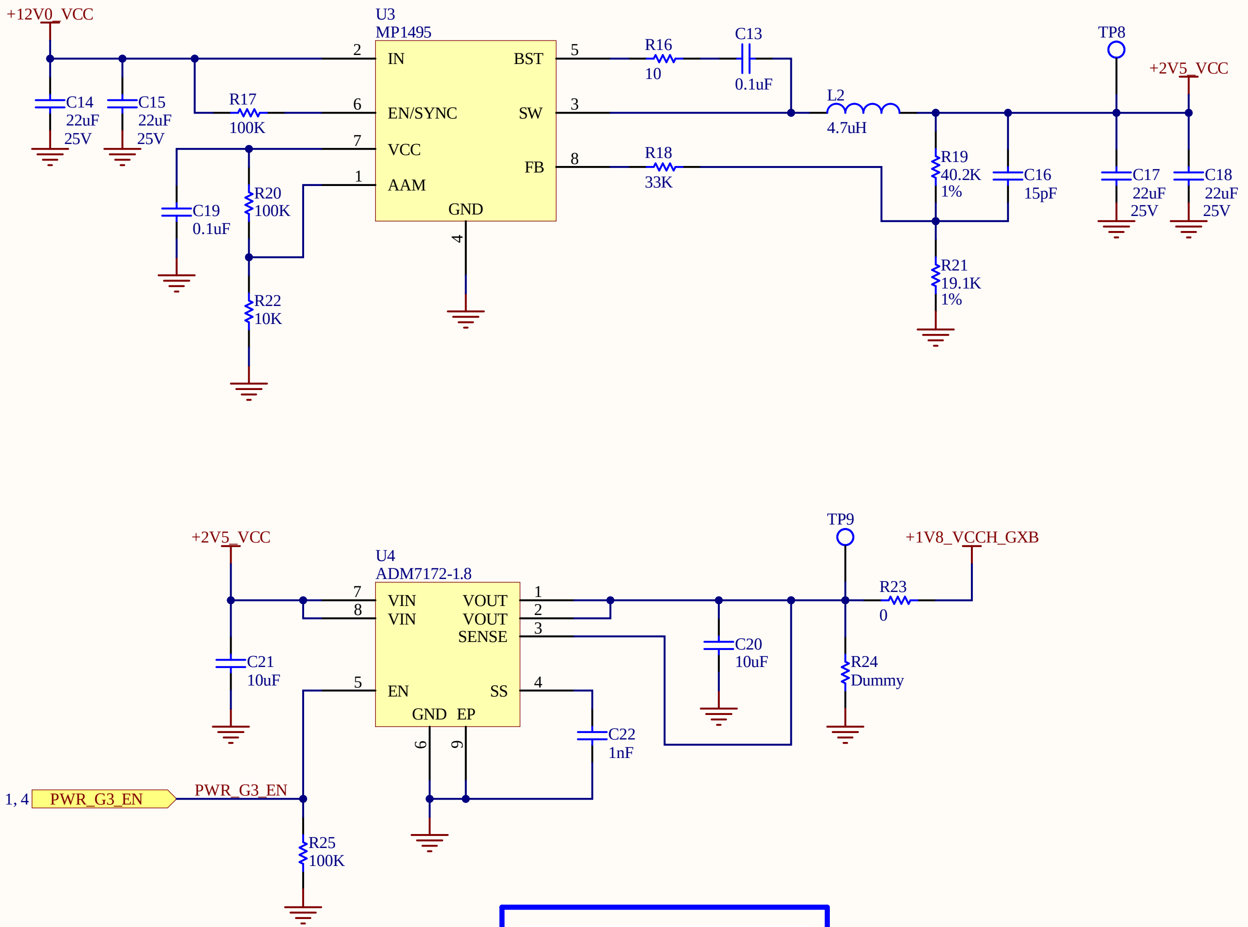
+12V0_VCC
C14
22uF
25V
C15
22uF
25V
R17
100K
C19
0.1uF
R20
100K
R22
10K
U3
MP1495
2
IN
6
EN/SYNC
7
VCC
1
AAM
GND
4
BST
5
SW
3
FB
8
R16
10
C13
0.1uF
L2
4.7uH
R18
33K
R19
40.2K
1%
C16
15pF
R21
19.1K
1%
TP8
+2V5_VCC
C17
22uF
25V
C18
22uF
25V
+2V5_VCC
C21
10uF
U4
ADM7172-1.8
7
VIN
8
VIN
5
EN
GND
EP
6
9
VOUT
1
VOUT
2
SENSE
3
SS
4
C22
1nF
C20
10uF
TP9
+1V8_VCCH_GXB
R23
0
R24
Dummy
1, 4
PWR_G3_EN
PWR_G3_EN
R25
100K

Analog power for :
VCCA_PLL & VCCH_GXB

Title			
Size A4	Number		Revision
Date:	5/24/2025	Sheet of	
File:	D:\DDA\..\[02] - PWR 1V8.SchDoc	Drawn By:	

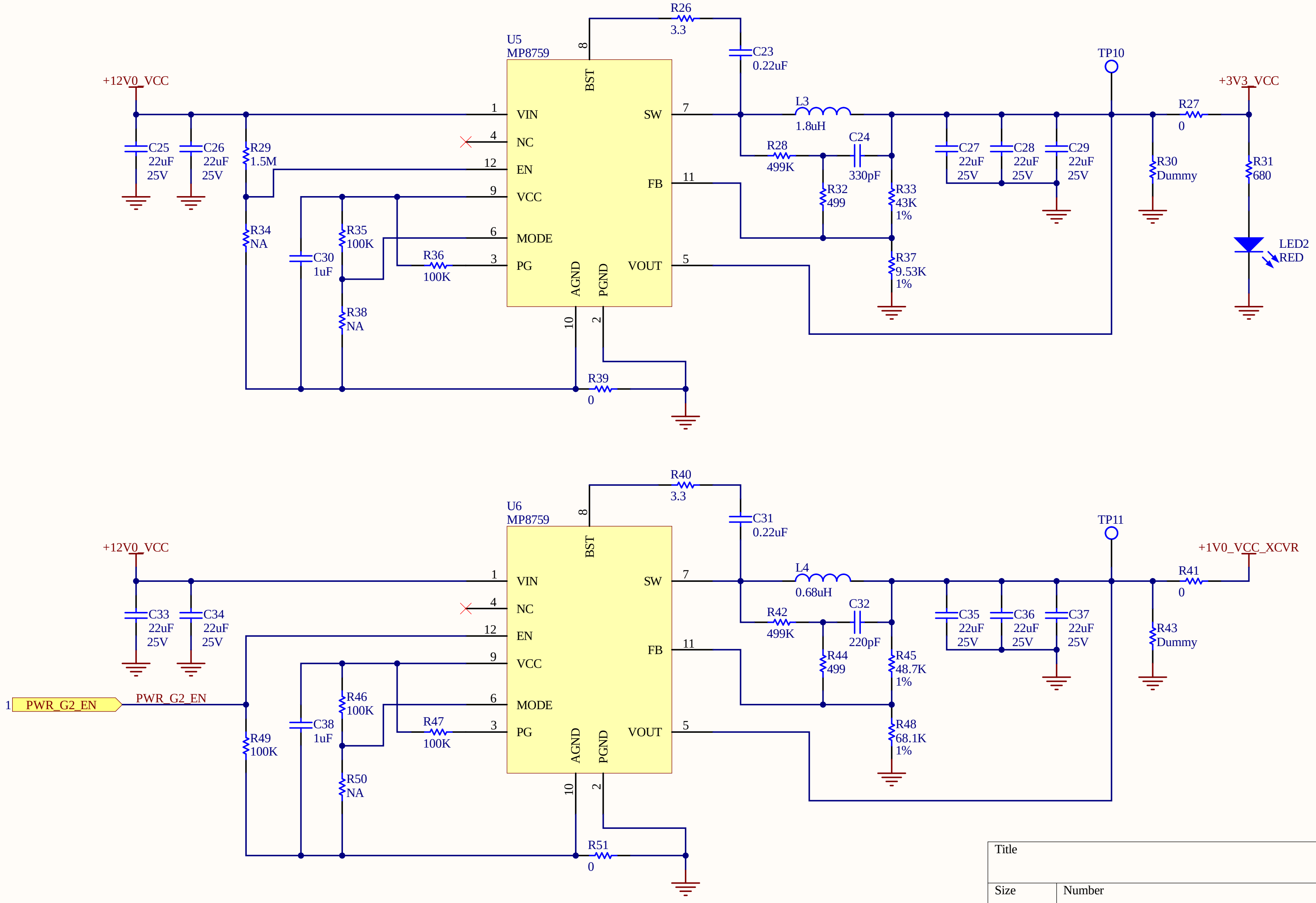
U5
MP8759
+12V0_VCC
C25 22uF 25V
C26 22uF 25V
R29 1.5M
R34 NA
C30 1uF
R35 100K
R38 NA
R36 100K
R26 3.3
C23 0.22uF
VIN
NC
EN
VCC
MODE
PG
BST
SW
FB
VOUT
AGND
PGND
1
4
12
9
6
3
8
7
11
5
10
2
R39 0
L3 1.8uH
R28 499K
C24 330pF
R32 499
R33 43K 1%
R37 9.53K 1%
C27 22uF 25V
C28 22uF 25V
C29 22uF 25V
TP10
R30 Dummy
R27 0
+3V3_VCC
R31 680
LED2 RED
U6
MP8759
+12V0_VCC
C33 22uF 25V
C34 22uF 25V
1 PWR_G2_EN
PWR_G2_EN
R49 100K
C38 1uF
R46 100K
R50 NA
R47 100K
R40 3.3
C31 0.22uF
R51 0
L4 0.68uH
R42 499K
C32 220pF
R44 499
R45 48.7K 1%
R48 68.1K 1%
C35 22uF 25V
C36 22uF 25V
C37 22uF 25V
TP11
R43 Dummy
R41 0
+1V0_VCC_XCVR
1
2
3
4
A
B
C
D

Title			
Size A4	Number		Revision
Date:	5/24/2025	Sheet of	
File:	D:\DDA\..\[03] - PWR 3V3, 1V0.SchDoc	Drawn By:	

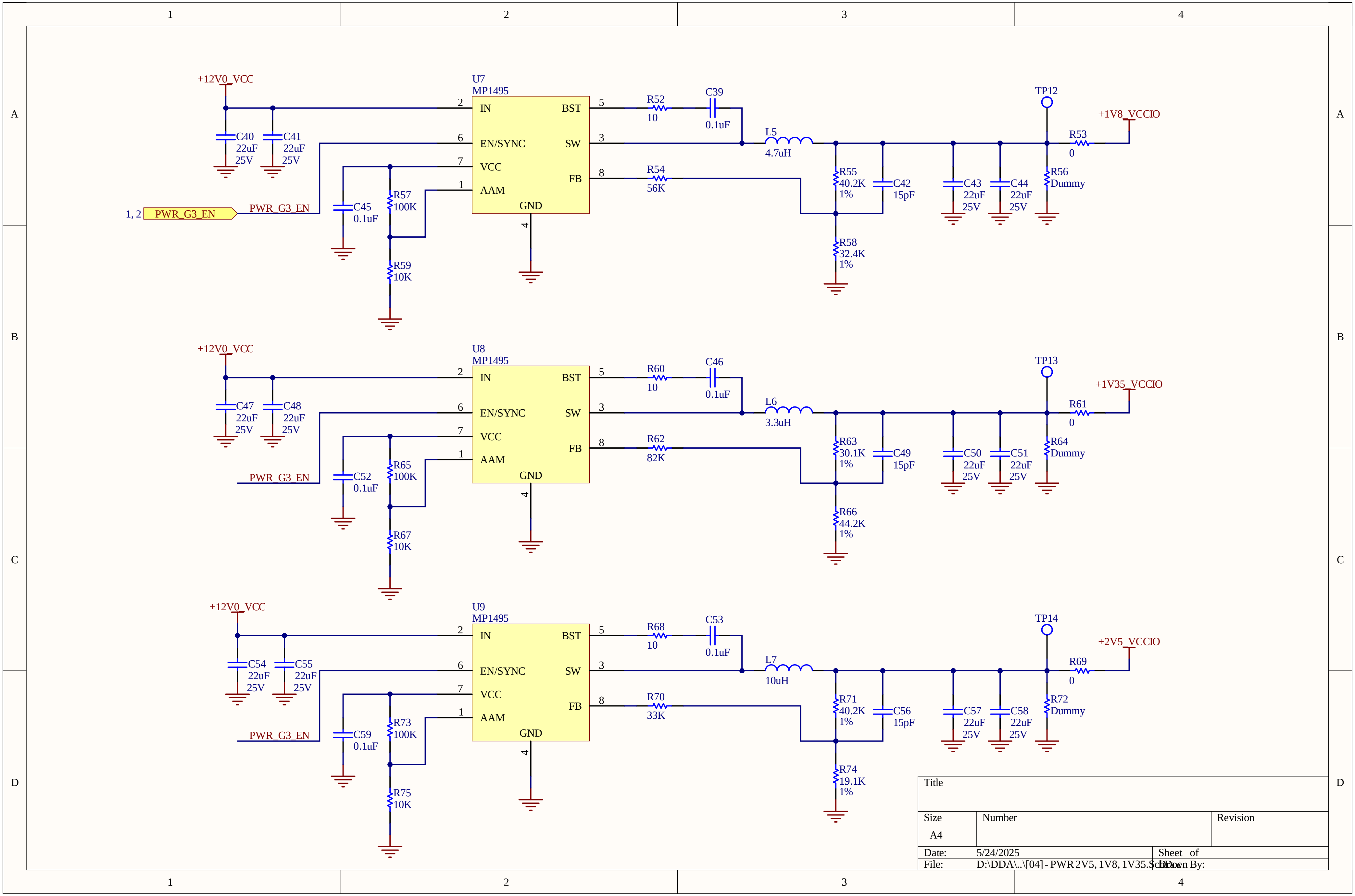
1
2
3
4
A
B
C
D
+12V0_VCC
C40
22uF
25V
C41
22uF
25V
1, 2
PWR_G3_EN
PWR_G3_EN
C45
0.1uF
R57
100K
R59
10K
U7
MP1495
2
IN
6
EN/SYNC
7
VCC
1
AAM
GND
4
BST
5
SW
3
FB
8
R52
10
C39
0.1uF
L5
4.7uH
R54
56K
R55
40.2K
1%
C42
15pF
R58
32.4K
1%
C43
22uF
25V
C44
22uF
25V
TP12
R56
Dummy
R53
0
+1V8_VCCIO
+12V0_VCC
C47
22uF
25V
C48
22uF
25V
PWR_G3_EN
C52
0.1uF
R65
100K
R67
10K
U8
MP1495
2
IN
6
EN/SYNC
7
VCC
1
AAM
GND
4
BST
5
SW
3
FB
8
R60
10
C46
0.1uF
L6
3.3uH
R62
82K
R63
30.1K
1%
C49
15pF
R66
44.2K
1%
C50
22uF
25V
C51
22uF
25V
TP13
R64
Dummy
R61
0
+1V35_VCCIO
+12V0_VCC
C54
22uF
25V
C55
22uF
25V
PWR_G3_EN
C59
0.1uF
R73
100K
R75
10K
U9
MP1495
2
IN
6
EN/SYNC
7
VCC
1
AAM
GND
4
BST
5
SW
3
FB
8
R68
10
C53
0.1uF
L7
10uH
R70
33K
R71
40.2K
1%
C56
15pF
R74
19.1K
1%
C57
22uF
25V
C58
22uF
25V
TP14
R72
Dummy
R69
0
+2V5_VCCIO

Title

Size: A4
Number
Revision

Date: 5/24/2025
Sheet of
File: D:\DDA\..\[04] - PWR 2V5, 1V8, 1V35.SchDoc
Drawn By:

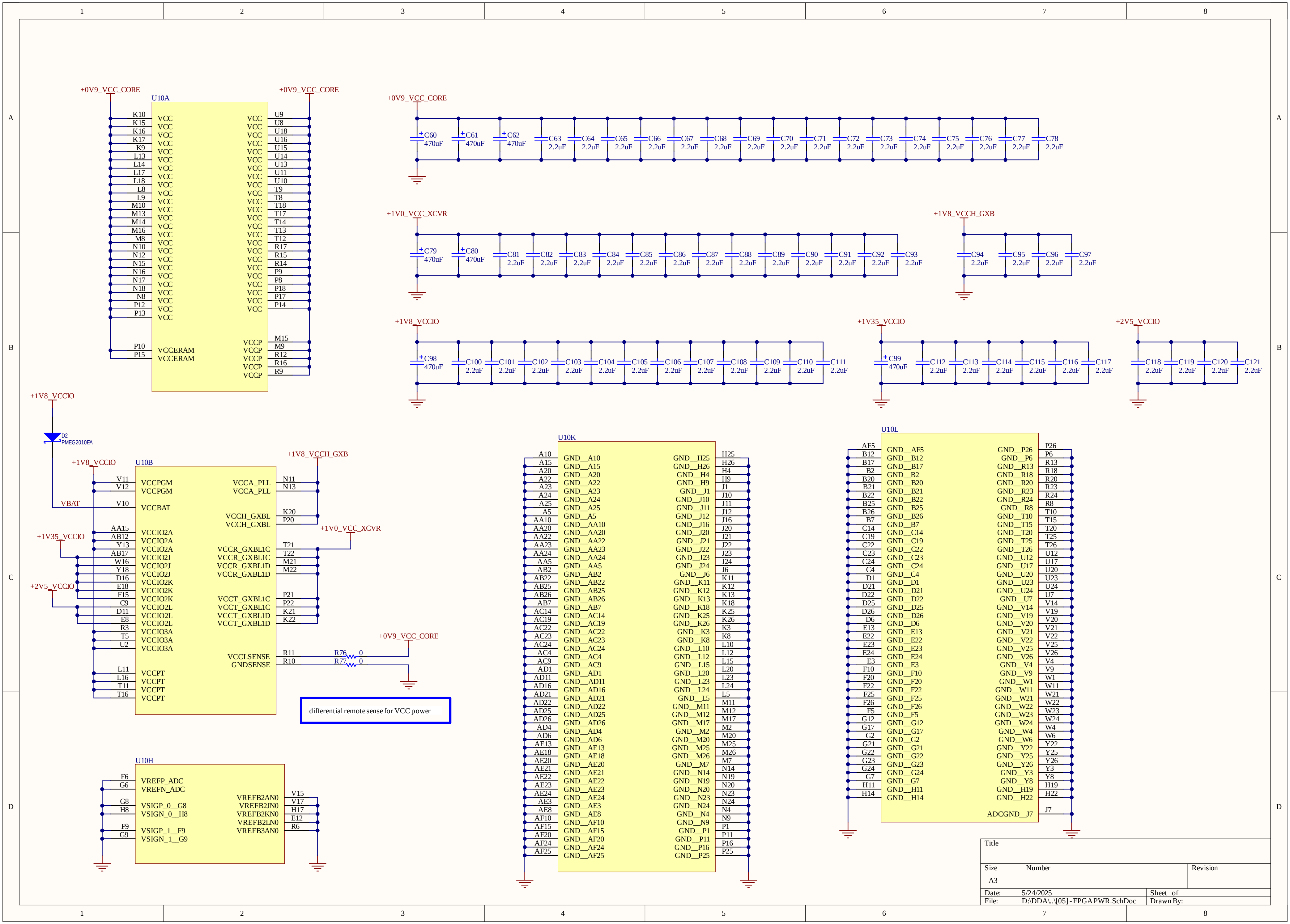
1
2
3
4
5
6
7
8
A
B
C
D
+0V9_VCC_CORE
U10A
K10 K15 K16 K17 K9 L13 L14 L17 L18 L8 L9 M10 M13 M14 M16 M8 N10 N12 N15 N16 N17 N18 N8 P12 P13
VCC
U9 U8 U18 U16 U15 U14 U13 U11 U10 T9 T8 T18 T17 T14 T13 T12 R17 R15 R14 P9 P8 P18 P17 P14
P10 P15
VCCERAM
M15 M9 R12 R16 R9
VCCP
C60 C61 C62
470uF
C63 C64 C65 C66 C67 C68 C69 C70 C71 C72 C73 C74 C75 C76 C77 C78
2.2uF
+1V0_VCC_XCVR
C79 C80
470uF
C81 C82 C83 C84 C85 C86 C87 C88 C89 C90 C91 C92 C93
2.2uF
+1V8_VCCH_GXB
C94 C95 C96 C97
2.2uF
+1V8_VCCIO
C98
470uF
C100 C101 C102 C103 C104 C105 C106 C107 C108 C109 C110 C111
2.2uF
+1V35_VCCIO
C99
470uF
C112 C113 C114 C115 C116 C117
2.2uF
+2V5_VCCIO
C118 C119 C120 C121
2.2uF
+1V8_VCCIO
D2
PMEG2010EA
VBAT
U10B
V11 VCCPGM
V12 VCCPGM
V10 VCCBAT
AA15 VCCIO2A
AB12 VCCIO2A
Y13 VCCIO2A
AB17 VCCIO2J
W16 VCCIO2J
Y18 VCCIO2J
D16 VCCIO2K
E18 VCCIO2K
F15 VCCIO2K
C9 VCCIO2L
D11 VCCIO2L
E8 VCCIO2L
R3 VCCIO3A
T5 VCCIO3A
U2 VCCIO3A
L11 VCCPT
L16 VCCPT
T11 VCCPT
T16 VCCPT
+1V35_VCCIO
+2V5_VCCIO
VCCA_PLL N11
VCCA_PLL N13
VCCH_GXBL K20
VCCH_GXBL P20
VCCR_GXBL1C T21
VCCR_GXBL1C T22
VCCR_GXBL1D M21
VCCR_GXBL1D M22
VCCT_GXBL1C P21
VCCT_GXBL1C P22
VCCT_GXBL1D K21
VCCT_GXBL1D K22
VCCLSENSE R11
GNDSENSE R10
R76 0
R77 0
+0V9_VCC_CORE
differential remote sense for VCC power
U10H
F6 VREFP_ADC
G6 VREFN_ADC
G8 VSIGP_0_G8
H8 VSIGN_0_H8
F9 VSIGP_1_F9
G9 VSIGN_1_G9
VREFB2AN0 V15
VREFB2JN0 V17
VREFB2KN0 H17
VREFB2LN0 E12
VREFB3AN0 R6
U10K
A10 GND_A10
A15 GND_A15
A20 GND_A20
A22 GND_A22
A23 GND_A23
A24 GND_A24
A25 GND_A25
A5 GND_A5
AA10 GND_AA10
AA20 GND_AA20
AA22 GND_AA22
AA23 GND_AA23
AA24 GND_AA24
AA5 GND_AA5
AB2 GND_AB2
AB22 GND_AB22
AB25 GND_AB25
AB26 GND_AB26
AB7 GND_AB7
AC14 GND_AC14
AC19 GND_AC19
AC22 GND_AC22
AC23 GND_AC23
AC24 GND_AC24
AC4 GND_AC4
AC9 GND_AC9
AD1 GND_AD1
AD11 GND_AD11
AD16 GND_AD16
AD21 GND_AD21
AD22 GND_AD22
AD25 GND_AD25
AD26 GND_AD26
AD4 GND_AD4
AD6 GND_AD6
AE13 GND_AE13
AE18 GND_AE18
AE20 GND_AE20
AE21 GND_AE21
AE22 GND_AE22
AE23 GND_AE23
AE24 GND_AE24
AE3 GND_AE3
AE8 GND_AE8
AF10 GND_AF10
AF15 GND_AF15
AF20 GND_AF20
AF24 GND_AF24
AF25 GND_AF25
GND_H25 H25
GND_H26 H26
GND_H4 H4
GND_H9 H9
GND_J1 J1
GND_J10 J10
GND_J11 J11
GND_J12 J12
GND_J16 J16
GND_J20 J20
GND_J21 J21
GND_J22 J22
GND_J23 J23
GND_J24 J24
GND_J6 J6
GND_K11 K11
GND_K12 K12
GND_K13 K13
GND_K18 K18
GND_K25 K25
GND_K26 K26
GND_K3 K3
GND_K8 K8
GND_L10 L10
GND_L12 L12
GND_L15 L15
GND_L20 L20
GND_L23 L23
GND_L24 L24
GND_L5 L5
GND_M11 M11
GND_M12 M12
GND_M17 M17
GND_M2 M2
GND_M20 M20
GND_M25 M25
GND_M26 M26
GND_M7 M7
GND_N14 N14
GND_N19 N19
GND_N20 N20
GND_N23 N23
GND_N24 N24
GND_N4 N4
GND_N9 N9
GND_P1 P1
GND_P11 P11
GND_P16 P16
GND_P25 P25
U10L
AF5 GND_AF5
B12 GND_B12
B17 GND_B17
B2 GND_B2
B20 GND_B20
B21 GND_B21
B22 GND_B22
B25 GND_B25
B26 GND_B26
B7 GND_B7
C14 GND_C14
C19 GND_C19
C22 GND_C22
C23 GND_C23
C24 GND_C24
C4 GND_C4
D1 GND_D1
D21 GND_D21
D22 GND_D22
D25 GND_D25
D26 GND_D26
D6 GND_D6
E13 GND_E13
E22 GND_E22
E23 GND_E23
E24 GND_E24
E3 GND_E3
F10 GND_F10
F20 GND_F20
F22 GND_F22
F25 GND_F25
F26 GND_F26
F5 GND_F5
G12 GND_G12
G17 GND_G17
G2 GND_G2
G21 GND_G21
G22 GND_G22
G23 GND_G23
G24 GND_G24
G7 GND_G7
H11 GND_H11
H14 GND_H14
GND_P26 P26
GND_P6 P6
GND_R13 R13
GND_R18 R18
GND_R20 R20
GND_R23 R23
GND_R24 R24
GND_R8 R8
GND_T10 T10
GND_T15 T15
GND_T20 T20
GND_T25 T25
GND_T26 T26
GND_U12 U12
GND_U17 U17
GND_U20 U20
GND_U23 U23
GND_U24 U24
GND_U7 U7
GND_V14 V14
GND_V19 V19
GND_V20 V20
GND_V21 V21
GND_V22 V22
GND_V25 V25
GND_V26 V26
GND_V4 V4
GND_V9 V9
GND_W1 W1
GND_W11 W11
GND_W21 W21
GND_W22 W22
GND_W23 W23
GND_W24 W24
GND_W4 W4
GND_W6 W6
GND_Y22 Y22
GND_Y25 Y25
GND_Y26 Y26
GND_Y3 Y3
GND_Y8 Y8
GND_H19 H19
GND_H22 H22
ADCGND_J7 J7

Title

Size A3
Number
Revision

Date: 5/24/2025
Sheet of
File: D:\DDA\..\[05]-FPGA PWR.SchDoc
Drawn By:

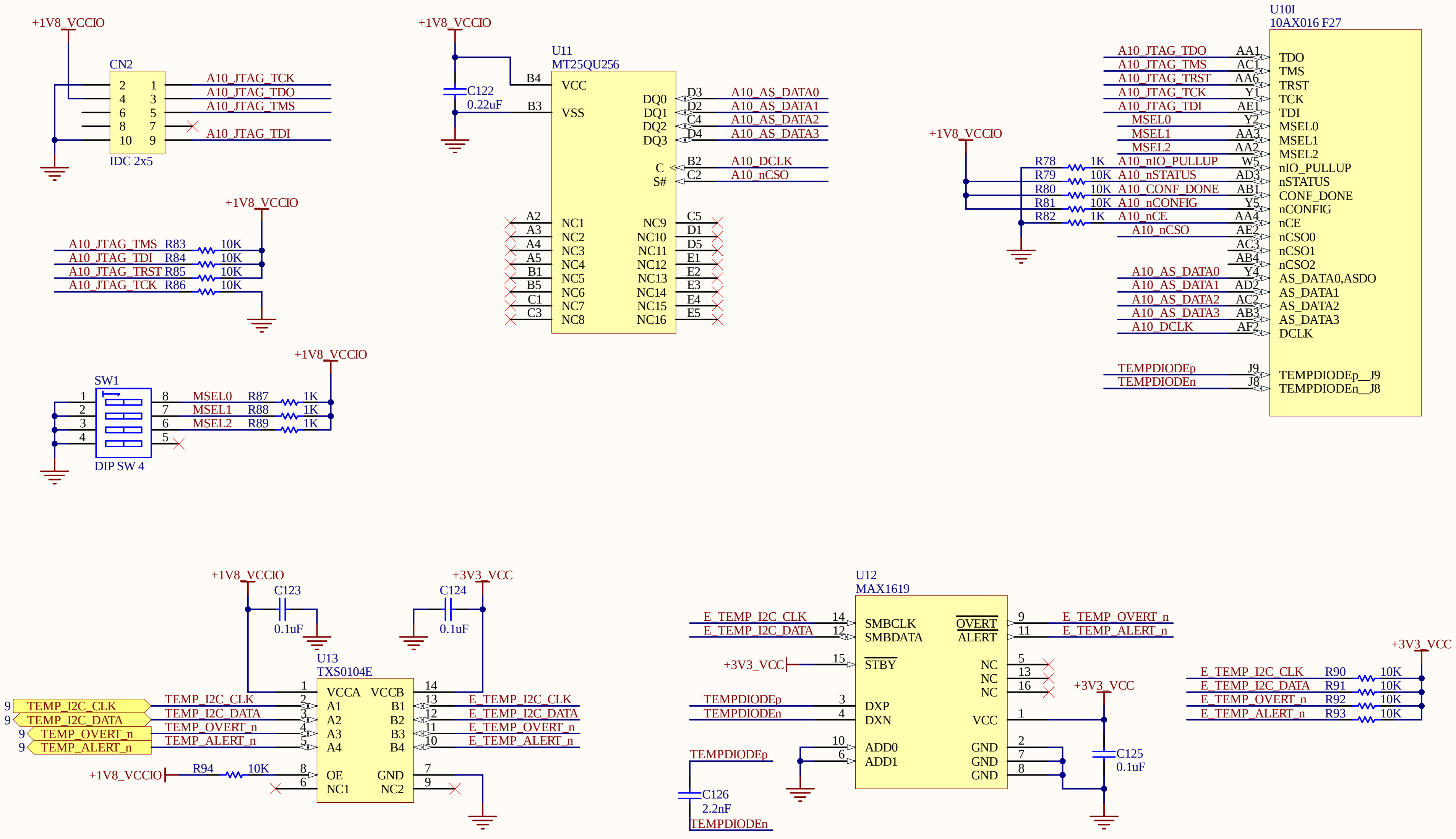
+1V8_VCCIO
CN2
IDC 2x5
2 1 A10_JTAG_TCK
4 3 A10_JTAG_TDO
6 5 A10_JTAG_TMS
8 7
10 9 A10_JTAG_TDI
A10_JTAG_TMS R83 10K
A10_JTAG_TDI R84 10K
A10_JTAG_TRST R85 10K
A10_JTAG_TCK R86 10K
SW1
DIP SW 4
1 8 MSEL0 R87 1K
2 7 MSEL1 R88 1K
3 6 MSEL2 R89 1K
4 5
C122
0.22uF
U11
MT25QU256
B4 VCC
B3 VSS
DQ0 D3 A10_AS_DATA0
DQ1 D2 A10_AS_DATA1
DQ2 C4 A10_AS_DATA2
DQ3 D4 A10_AS_DATA3
C B2 A10_DCLK
S# C2 A10_nCSO
A2 NC1 NC9 C5
A3 NC2 NC10 D1
A4 NC3 NC11 D5
A5 NC4 NC12 E1
B1 NC5 NC13 E2
B5 NC6 NC14 E3
C1 NC7 NC15 E4
C3 NC8 NC16 E5
U10I
10AX016 F27
A10_JTAG_TDO AA1 TDO
A10_JTAG_TMS AC1 TMS
A10_JTAG_TRST AA6 TRST
A10_JTAG_TCK Y1 TCK
A10_JTAG_TDI AE1 TDI
MSEL0 Y2 MSEL0
MSEL1 AA3 MSEL1
MSEL2 AA2 MSEL2
R78 1K A10_nIO_PULLUP W5 nIO_PULLUP
R79 10K A10_nSTATUS AD3 nSTATUS
R80 10K A10_CONF_DONE AB1 CONF_DONE
R81 10K A10_nCONFIG Y5 nCONFIG
R82 1K A10_nCE AA4 nCE
A10_nCSO AE2 nCSO0
AC3 nCSO1
AB4 nCSO2
A10_AS_DATA0 Y4 AS_DATA0,ASDO
A10_AS_DATA1 AD2 AS_DATA1
A10_AS_DATA2 AC2 AS_DATA2
A10_AS_DATA3 AB3 AS_DATA3
A10_DCLK AF2 DCLK
TEMPDIODEp J9 TEMPDIODEp__J9
TEMPDIODEn J8 TEMPDIODEn__J8
+3V3_VCC
C123 0.1uF
C124 0.1uF
U13
TXS0104E
1 VCCA VCCB 14
9 TEMP_I2C_CLK 2 A1 B1 13 E_TEMP_I2C_CLK
9 TEMP_I2C_DATA 3 A2 B2 12 E_TEMP_I2C_DATA
9 TEMP_OVERT_n 4 A3 B3 11 E_TEMP_OVERT_n
9 TEMP_ALERT_n 5 A4 B4 10 E_TEMP_ALERT_n
+1V8_VCCIO R94 10K 8 OE GND 7
6 NC1 NC2 9
U12
MAX1619
E_TEMP_I2C_CLK 14 SMBCLK OVERT 9 E_TEMP_OVERT_n
E_TEMP_I2C_DATA 12 SMBDATA ALERT 11 E_TEMP_ALERT_n
+3V3_VCC 15 STBY
NC 5
NC 13
NC 16
TEMPDIODEp 3 DXP
TEMPDIODEn 4 DXN VCC 1
10 ADD0 GND 2
6 ADD1 GND 7
GND 8
C125 0.1uF
TEMPDIODEp
C126 2.2nF
TEMPDIODEn
E_TEMP_I2C_CLK R90 10K
E_TEMP_I2C_DATA R91 10K
E_TEMP_OVERT_n R92 10K
E_TEMP_ALERT_n R93 10K
1 2 3 4
A B C D

Title		
Size A4	Number	Revision
Date: 5/24/2025	Sheet of	
File: D:\DDA\..\[06] - FPGA CONFIG, TEMP MON.SchDoc	Drawn By:	

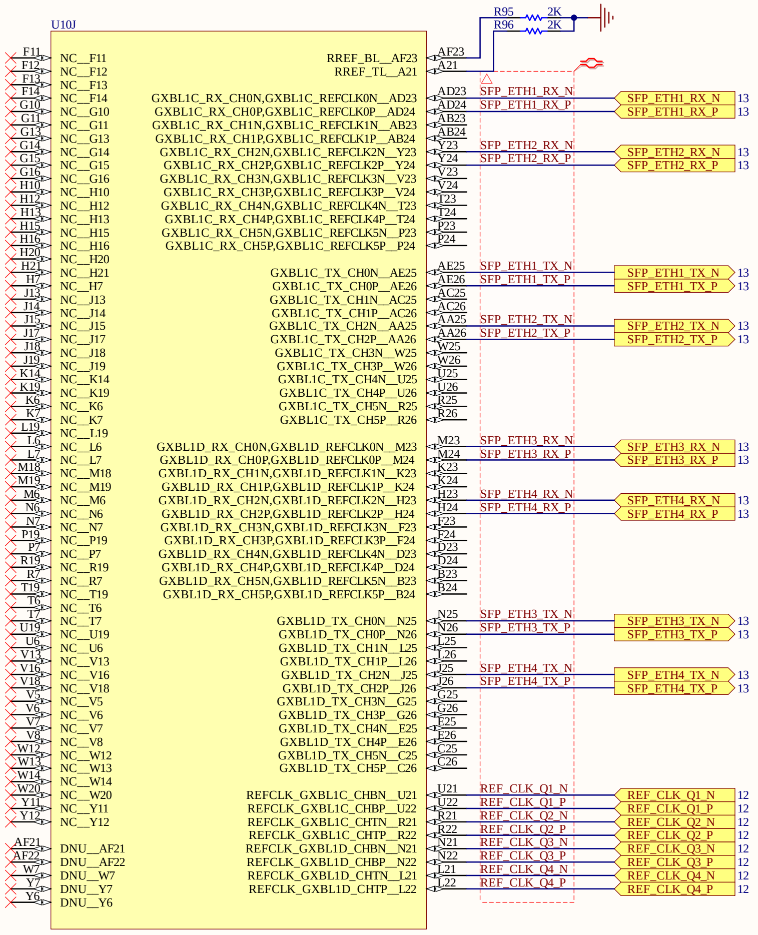
U10J
R95
2K
R96
2K
NC__F11
NC__F12
NC__F13
NC__F14
NC__G10
NC__G11
NC__G13
NC__G14
NC__G15
NC__G16
NC__H10
NC__H12
NC__H13
NC__H15
NC__H16
NC__H20
NC__H21
NC__H7
NC__J13
NC__J14
NC__J15
NC__J17
NC__J18
NC__J19
NC__K14
NC__K19
NC__K6
NC__K7
NC__L19
NC__L6
NC__L7
NC__M18
NC__M19
NC__M6
NC__N6
NC__N7
NC__P19
NC__P7
NC__R19
NC__R7
NC__T19
NC__T6
NC__T7
NC__U19
NC__U6
NC__V13
NC__V16
NC__V18
NC__V5
NC__V6
NC__V7
NC__V8
NC__W12
NC__W13
NC__W14
NC__W20
NC__Y11
NC__Y12
DNU__AF21
DNU__AF22
DNU__W7
DNU__Y7
DNU__Y6
RREF_BL__AF23
RREF_TL__A21
GXBL1C_RX_CH0N,GXBL1C_REFCLK0N__AD23
GXBL1C_RX_CH0P,GXBL1C_REFCLK0P__AD24
GXBL1C_RX_CH1N,GXBL1C_REFCLK1N__AB23
GXBL1C_RX_CH1P,GXBL1C_REFCLK1P__AB24
GXBL1C_RX_CH2N,GXBL1C_REFCLK2N__Y23
GXBL1C_RX_CH2P,GXBL1C_REFCLK2P__Y24
GXBL1C_RX_CH3N,GXBL1C_REFCLK3N__V23
GXBL1C_RX_CH3P,GXBL1C_REFCLK3P__V24
GXBL1C_RX_CH4N,GXBL1C_REFCLK4N__T23
GXBL1C_RX_CH4P,GXBL1C_REFCLK4P__T24
GXBL1C_RX_CH5N,GXBL1C_REFCLK5N__P23
GXBL1C_RX_CH5P,GXBL1C_REFCLK5P__P24
GXBL1C_TX_CH0N__AE25
GXBL1C_TX_CH0P__AE26
GXBL1C_TX_CH1N__AC25
GXBL1C_TX_CH1P__AC26
GXBL1C_TX_CH2N__AA25
GXBL1C_TX_CH2P__AA26
GXBL1C_TX_CH3N__W25
GXBL1C_TX_CH3P__W26
GXBL1C_TX_CH4N__U25
GXBL1C_TX_CH4P__U26
GXBL1C_TX_CH5N__R25
GXBL1C_TX_CH5P__R26
GXBL1D_RX_CH0N,GXBL1D_REFCLK0N__M23
GXBL1D_RX_CH0P,GXBL1D_REFCLK0P__M24
GXBL1D_RX_CH1N,GXBL1D_REFCLK1N__K23
GXBL1D_RX_CH1P,GXBL1D_REFCLK1P__K24
GXBL1D_RX_CH2N,GXBL1D_REFCLK2N__H23
GXBL1D_RX_CH2P,GXBL1D_REFCLK2P__H24
GXBL1D_RX_CH3N,GXBL1D_REFCLK3N__F23
GXBL1D_RX_CH3P,GXBL1D_REFCLK3P__F24
GXBL1D_RX_CH4N,GXBL1D_REFCLK4N__D23
GXBL1D_RX_CH4P,GXBL1D_REFCLK4P__D24
GXBL1D_RX_CH5N,GXBL1D_REFCLK5N__B23
GXBL1D_RX_CH5P,GXBL1D_REFCLK5P__B24
GXBL1D_TX_CH0N__N25
GXBL1D_TX_CH0P__N26
GXBL1D_TX_CH1N__L25
GXBL1D_TX_CH1P__L26
GXBL1D_TX_CH2N__J25
GXBL1D_TX_CH2P__J26
GXBL1D_TX_CH3N__G25
GXBL1D_TX_CH3P__G26
GXBL1D_TX_CH4N__E25
GXBL1D_TX_CH4P__E26
GXBL1D_TX_CH5N__C25
GXBL1D_TX_CH5P__C26
REFCLK_GXBL1C_CHBN__U21
REFCLK_GXBL1C_CHBP__U22
REFCLK_GXBL1C_CHTN__R21
REFCLK_GXBL1C_CHTP__R22
REFCLK_GXBL1D_CHBN__N21
REFCLK_GXBL1D_CHBP__N22
REFCLK_GXBL1D_CHTN__L21
REFCLK_GXBL1D_CHTP__L22
SFP_ETH1_RX_N
SFP_ETH1_RX_P
SFP_ETH2_RX_N
SFP_ETH2_RX_P
SFP_ETH1_TX_N
SFP_ETH1_TX_P
SFP_ETH2_TX_N
SFP_ETH2_TX_P
SFP_ETH3_RX_N
SFP_ETH3_RX_P
SFP_ETH4_RX_N
SFP_ETH4_RX_P
SFP_ETH3_TX_N
SFP_ETH3_TX_P
SFP_ETH4_TX_N
SFP_ETH4_TX_P
REF_CLK_Q1_N
REF_CLK_Q1_P
REF_CLK_Q2_N
REF_CLK_Q2_P
REF_CLK_Q3_N
REF_CLK_Q3_P
REF_CLK_Q4_N
REF_CLK_Q4_P
13
12

Title

Size: A3
Number
Revision

Date: 5/24/2025
Sheet of
File: D:\DDA\..\[07] - FPGA XCVR.SchDoc
Drawn By:

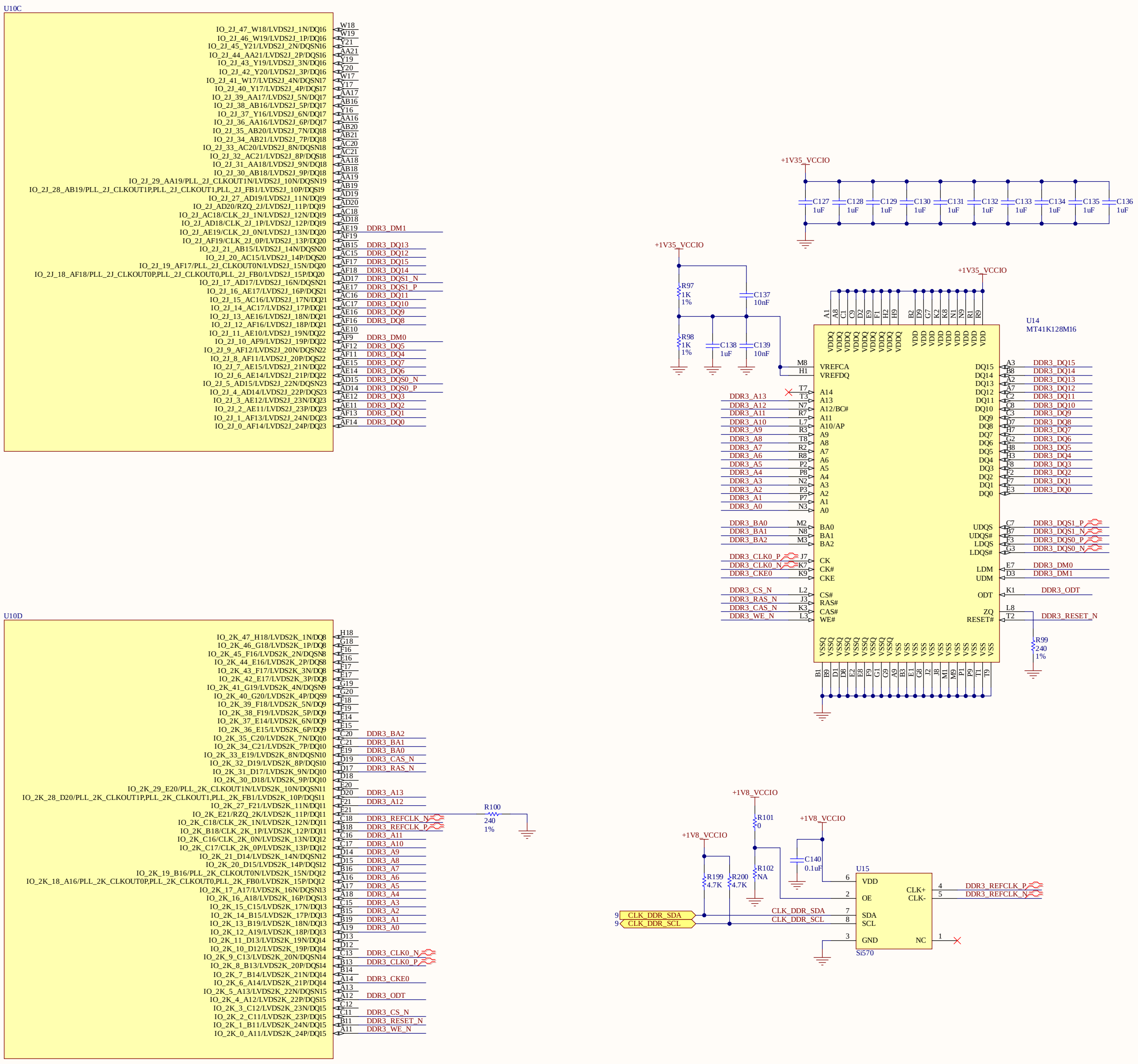
U10C
IO_2J_47_W18/LVDS2J_1N/DQ16 W18
IO_2J_46_W19/LVDS2J_1P/DQ16 W19
IO_2J_45_Y21/LVDS2J_2N/DQSN16 Y21
IO_2J_44_AA21/LVDS2J_2P/DQS16 AA21
IO_2J_43_Y19/LVDS2J_3N/DQ16 Y19
IO_2J_42_Y20/LVDS2J_3P/DQ16 Y20
IO_2J_41_W17/LVDS2J_4N/DQSN17 W17
IO_2J_40_Y17/LVDS2J_4P/DQS17 Y17
IO_2J_39_AA17/LVDS2J_5N/DQ17 AA17
IO_2J_38_AB16/LVDS2J_5P/DQ17 AB16
IO_2J_37_Y16/LVDS2J_6N/DQ17 Y16
IO_2J_36_AA16/LVDS2J_6P/DQ17 AA16
IO_2J_35_AB20/LVDS2J_7N/DQ18 AB20
IO_2J_34_AB21/LVDS2J_7P/DQ18 AB21
IO_2J_33_AC20/LVDS2J_8N/DQSN18 AC20
IO_2J_32_AC21/LVDS2J_8P/DQS18 AC21
IO_2J_31_AA18/LVDS2J_9N/DQ18 AA18
IO_2J_30_AB18/LVDS2J_9P/DQ18 AB18
IO_2J_29_AA19/PLL_2J_CLKOUT1N/LVDS2J_10N/DQSN19 AA19
IO_2J_28_AB19/PLL_2J_CLKOUT1P,PLL_2J_CLKOUT1,PLL_2J_FB1/LVDS2J_10P/DQS19 AB19
IO_2J_27_AD19/LVDS2J_11N/DQ19 AD19
IO_2J_AD20/RZQ_2J/LVDS2J_11P/DQ19 AD20
IO_2J_AC18/CLK_2J_1N/LVDS2J_12N/DQ19 AC18
IO_2J_AD18/CLK_2J_1P/LVDS2J_12P/DQ19 AD18
IO_2J_AE19/CLK_2J_0N/LVDS2J_13N/DQ20 AE19 DDR3_DM1
IO_2J_AF19/CLK_2J_0P/LVDS2J_13P/DQ20 AF19
IO_2J_21_AB15/LVDS2J_14N/DQSN20 AB15 DDR3_DQ13
IO_2J_20_AC15/LVDS2J_14P/DQS20 AC15 DDR3_DQ12
IO_2J_19_AF17/PLL_2J_CLKOUT0N/LVDS2J_15N/DQ20 AF17 DDR3_DQ15
IO_2J_18_AF18/PLL_2J_CLKOUT0P,PLL_2J_CLKOUT0,PLL_2J_FB0/LVDS2J_15P/DQ20 AF18 DDR3_DQ14
IO_2J_17_AD17/LVDS2J_16N/DQSN21 AD17 DDR3_DQS1_N
IO_2J_16_AE17/LVDS2J_16P/DQS21 AE17 DDR3_DQS1_P
IO_2J_15_AC16/LVDS2J_17N/DQ21 AC16 DDR3_DQ11
IO_2J_14_AC17/LVDS2J_17P/DQ21 AC17 DDR3_DQ10
IO_2J_13_AE16/LVDS2J_18N/DQ21 AE16 DDR3_DQ9
IO_2J_12_AF16/LVDS2J_18P/DQ21 AF16 DDR3_DQ8
IO_2J_11_AE10/LVDS2J_19N/DQ22 AE10
IO_2J_10_AF9/LVDS2J_19P/DQ22 AF9 DDR3_DM0
IO_2J_9_AF12/LVDS2J_20N/DQSN22 AF12 DDR3_DQ5
IO_2J_8_AF11/LVDS2J_20P/DQS22 AF11 DDR3_DQ4
IO_2J_7_AE15/LVDS2J_21N/DQ22 AE15 DDR3_DQ7
IO_2J_6_AE14/LVDS2J_21P/DQ22 AE14 DDR3_DQ6
IO_2J_5_AD15/LVDS2J_22N/DQSN23 AD15 DDR3_DQS0_N
IO_2J_4_AD14/LVDS2J_22P/DQS23 AD14 DDR3_DQS0_P
IO_2J_3_AE12/LVDS2J_23N/DQ23 AE12 DDR3_DQ3
IO_2J_2_AE11/LVDS2J_23P/DQ23 AE11 DDR3_DQ2
IO_2J_1_AF13/LVDS2J_24N/DQ23 AF13 DDR3_DQ1
IO_2J_0_AF14/LVDS2J_24P/DQ23 AF14 DDR3_DQ0
+1V35_VCCIO
C127 1uF
C128 1uF
C129 1uF
C130 1uF
C131 1uF
C132 1uF
C133 1uF
C134 1uF
C135 1uF
C136 1uF
+1V35_VCCIO
R97 1K 1%
R98 1K 1%
C137 10nF
C138 1uF
C139 10nF
+1V35_VCCIO
U14
MT41K128M16
A1 A8 C1 C9 D2 E9 F1 H2 H9 VDDQ
B2 D9 G7 K2 K8 N1 N9 R1 R9 VDD
M8 VREFCA
H1 VREFDQ
T7 A14
DDR3_A13 T3 A13
DDR3_A12 N7 A12/BC#
DDR3_A11 R7 A11
DDR3_A10 L7 A10/AP
DDR3_A9 R3 A9
DDR3_A8 T8 A8
DDR3_A7 R2 A7
DDR3_A6 R8 A6
DDR3_A5 P2 A5
DDR3_A4 P8 A4
DDR3_A3 N2 A3
DDR3_A2 P3 A2
DDR3_A1 P7 A1
DDR3_A0 N3 A0
DDR3_BA0 M2 BA0
DDR3_BA1 N8 BA1
DDR3_BA2 M3 BA2
DDR3_CLK0_P J7 CK
DDR3_CLK0_N K7 CK#
DDR3_CKE0 K9 CKE
DDR3_CS_N L2 CS#
DDR3_RAS_N J3 RAS#
DDR3_CAS_N K3 CAS#
DDR3_WE_N L3 WE#
DQ15 A3 DDR3_DQ15
DQ14 B8 DDR3_DQ14
DQ13 A2 DDR3_DQ13
DQ12 A7 DDR3_DQ12
DQ11 C2 DDR3_DQ11
DQ10 C8 DDR3_DQ10
DQ9 C3 DDR3_DQ9
DQ8 D7 DDR3_DQ8
DQ7 H7 DDR3_DQ7
DQ6 G2 DDR3_DQ6
DQ5 H8 DDR3_DQ5
DQ4 H3 DDR3_DQ4
DQ3 F8 DDR3_DQ3
DQ2 F2 DDR3_DQ2
DQ1 F7 DDR3_DQ1
DQ0 E3 DDR3_DQ0
UDQS C7 DDR3_DQS1_P
UDQS# B7 DDR3_DQS1_N
LDQS F3 DDR3_DQS0_P
LDQS# G3 DDR3_DQS0_N
LDM E7 DDR3_DM0
UDM D3 DDR3_DM1
ODT K1 DDR3_ODT
ZQ L8
RESET# T2 DDR3_RESET_N
R99 240 1%
B1 B9 D1 D8 E2 E8 F9 G1 G9 VSSQ
A9 B3 E1 G8 J2 J8 M1 M9 P1 P9 T1 T9 VSS
U10D
IO_2K_47_H18/LVDS2K_1N/DQ8 H18
IO_2K_46_G18/LVDS2K_1P/DQ8 G18
IO_2K_45_F16/LVDS2K_2N/DQSN8 F16
IO_2K_44_E16/LVDS2K_2P/DQS8 E16
IO_2K_43_F17/LVDS2K_3N/DQ8 F17
IO_2K_42_E17/LVDS2K_3P/DQ8 E17
IO_2K_41_G19/LVDS2K_4N/DQSN9 G19
IO_2K_40_G20/LVDS2K_4P/DQS9 G20
IO_2K_39_F18/LVDS2K_5N/DQ9 F18
IO_2K_38_F19/LVDS2K_5P/DQ9 F19
IO_2K_37_E14/LVDS2K_6N/DQ9 E14
IO_2K_36_E15/LVDS2K_6P/DQ9 E15
IO_2K_35_C20/LVDS2K_7N/DQ10 C20 DDR3_BA2
IO_2K_34_C21/LVDS2K_7P/DQ10 C21 DDR3_BA1
IO_2K_33_E19/LVDS2K_8N/DQSN10 E19 DDR3_BA0
IO_2K_32_D19/LVDS2K_8P/DQS10 D19 DDR3_CAS_N
IO_2K_31_D17/LVDS2K_9N/DQ10 D17 DDR3_RAS_N
IO_2K_30_D18/LVDS2K_9P/DQ10 D18
IO_2K_29_E20/PLL_2K_CLKOUT1N/LVDS2K_10N/DQSN11 E20
IO_2K_28_D20/PLL_2K_CLKOUT1P,PLL_2K_CLKOUT1,PLL_2K_FB1/LVDS2K_10P/DQS11 D20 DDR3_A13
IO_2K_27_F21/LVDS2K_11N/DQ11 F21 DDR3_A12
IO_2K_E21/RZQ_2K/LVDS2K_11P/DQ11 E21
R100 240 1%
IO_2K_C18/CLK_2K_1N/LVDS2K_12N/DQ11 C18 DDR3_REFCLK_N
IO_2K_B18/CLK_2K_1P/LVDS2K_12P/DQ11 B18 DDR3_REFCLK_P
IO_2K_C16/CLK_2K_0N/LVDS2K_13N/DQ12 C16 DDR3_A11
IO_2K_C17/CLK_2K_0P/LVDS2K_13P/DQ12 C17 DDR3_A10
IO_2K_21_D14/LVDS2K_14N/DQSN12 D14 DDR3_A9
IO_2K_20_D15/LVDS2K_14P/DQS12 D15 DDR3_A8
IO_2K_19_B16/PLL_2K_CLKOUT0N/LVDS2K_15N/DQ12 B16 DDR3_A7
IO_2K_18_A16/PLL_2K_CLKOUT0P,PLL_2K_CLKOUT0,PLL_2K_FB0/LVDS2K_15P/DQ12 A16 DDR3_A6
IO_2K_17_A17/LVDS2K_16N/DQSN13 A17 DDR3_A5
IO_2K_16_A18/LVDS2K_16P/DQS13 A18 DDR3_A4
IO_2K_15_C15/LVDS2K_17N/DQ13 C15 DDR3_A3
IO_2K_14_B15/LVDS2K_17P/DQ13 B15 DDR3_A2
IO_2K_13_B19/LVDS2K_18N/DQ13 B19 DDR3_A1
IO_2K_12_A19/LVDS2K_18P/DQ13 A19 DDR3_A0
IO_2K_11_D13/LVDS2K_19N/DQ14 D13
IO_2K_10_D12/LVDS2K_19P/DQ14 D12
IO_2K_9_C13/LVDS2K_20N/DQSN14 C13 DDR3_CLK0_N
IO_2K_8_B13/LVDS2K_20P/DQS14 B13 DDR3_CLK0_P
IO_2K_7_B14/LVDS2K_21N/DQ14 B14
IO_2K_6_A14/LVDS2K_21P/DQ14 A14 DDR3_CKE0
IO_2K_5_A13/LVDS2K_22N/DQSN15 A13
IO_2K_4_A12/LVDS2K_22P/DQS15 A12 DDR3_ODT
IO_2K_3_C12/LVDS2K_23N/DQ15 C12
IO_2K_2_C11/LVDS2K_23P/DQ15 C11 DDR3_CS_N
IO_2K_1_B11/LVDS2K_24N/DQ15 B11 DDR3_RESET_N
IO_2K_0_A11/LVDS2K_24P/DQ15 A11 DDR3_WE_N
+1V8_VCCIO
R101 0
R102 NA
+1V8_VCCIO
C140 0.1uF
+1V8_VCCIO
R199 4.7K
R200 4.7K
9 CLK_DDR_SDA
9 CLK_DDR_SCL
CLK_DDR_SDA
CLK_DDR_SCL
U15
6 VDD
2 OE
7 SDA
8 SCL
3 GND
CLK+ 4 DDR3_REFCLK_P
CLK- 5 DDR3_REFCLK_N
NC 1
Si570

Title		
Size A2	Number	Revision
Date: 5/24/2025	Sheet of	
File: D:\DDA\..\[08] - FPGA - DDR3.SchDoc	Drawn By:	

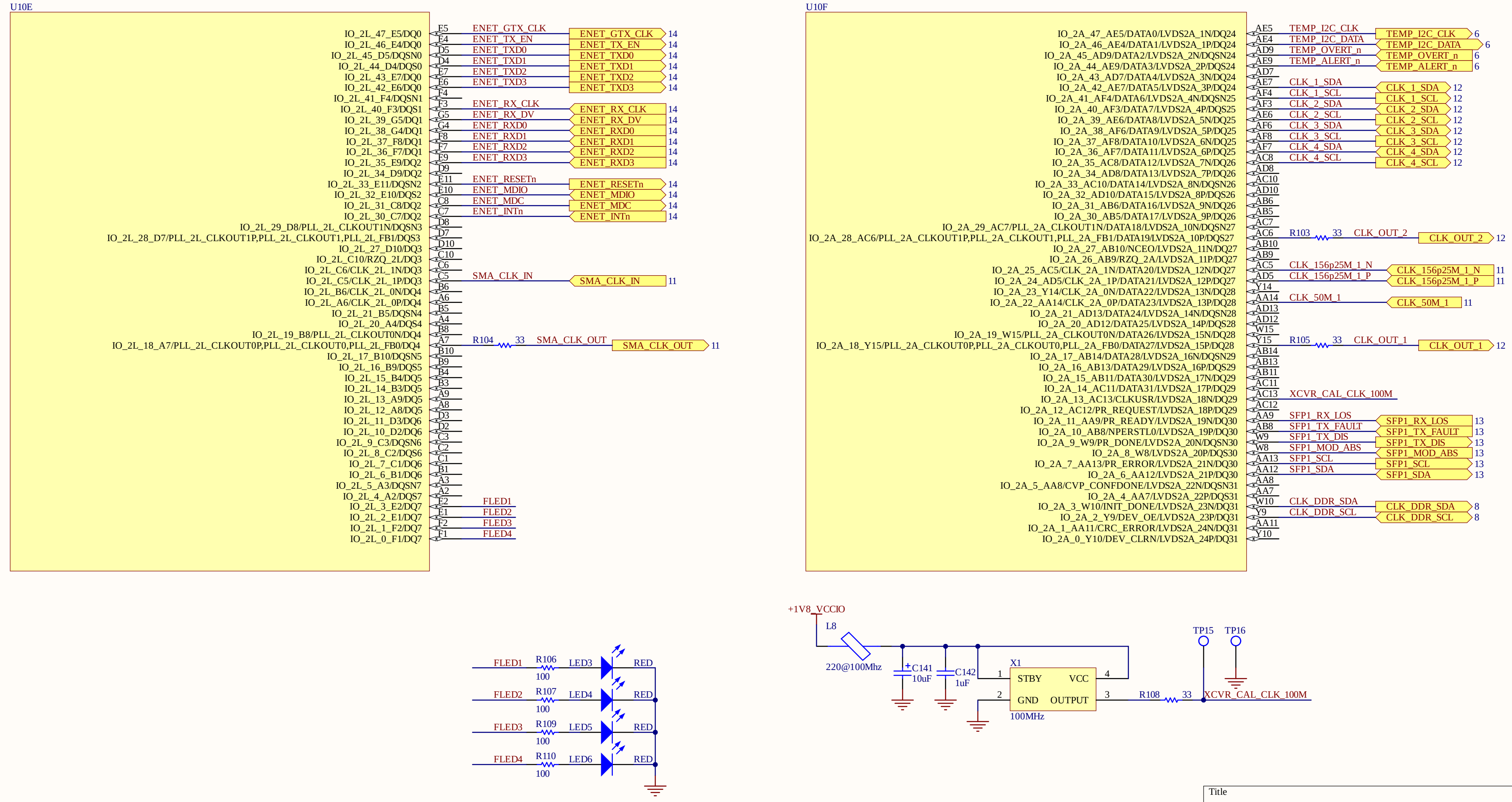
U10E
IO_2L_47_E5/DQ0 E5 ENET_GTX_CLK 14
IO_2L_46_E4/DQ0 E4 ENET_TX_EN 14
IO_2L_45_D5/DQSN0 D5 ENET_TXD0 14
IO_2L_44_D4/DQS0 D4 ENET_TXD1 14
IO_2L_43_E7/DQ0 E7 ENET_TXD2 14
IO_2L_42_E6/DQ0 E6 ENET_TXD3 14
IO_2L_41_F4/DQSN1 F4
IO_2L_40_F3/DQS1 F3 ENET_RX_CLK 14
IO_2L_39_G5/DQ1 G5 ENET_RX_DV 14
IO_2L_38_G4/DQ1 G4 ENET_RXD0 14
IO_2L_37_F8/DQ1 F8 ENET_RXD1 14
IO_2L_36_F7/DQ1 F7 ENET_RXD2 14
IO_2L_35_E9/DQ2 E9 ENET_RXD3 14
IO_2L_34_D9/DQ2 D9
IO_2L_33_E11/DQSN2 E11 ENET_RESETn 14
IO_2L_32_E10/DQS2 E10 ENET_MDIO 14
IO_2L_31_C8/DQ2 C8 ENET_MDC 14
IO_2L_30_C7/DQ2 C7 ENET_INTn 14
IO_2L_29_D8/PLL_2L_CLKOUT1N/DQSN3 D8
IO_2L_28_D7/PLL_2L_CLKOUT1P,PLL_2L_CLKOUT1,PLL_2L_FB1/DQS3 D7
IO_2L_27_D10/DQ3 D10
IO_2L_C10/RZQ_2L/DQ3 C10
IO_2L_C6/CLK_2L_1N/DQ3 C6
IO_2L_C5/CLK_2L_1P/DQ3 C5 SMA_CLK_IN 11
IO_2L_B6/CLK_2L_0N/DQ4 B6
IO_2L_A6/CLK_2L_0P/DQ4 A6
IO_2L_21_B5/DQSN4 B5
IO_2L_20_A4/DQS4 A4
IO_2L_19_B8/PLL_2L_CLKOUT0N/DQ4 B8
IO_2L_18_A7/PLL_2L_CLKOUT0P,PLL_2L_CLKOUT0,PLL_2L_FB0/DQ4 A7 R104 33 SMA_CLK_OUT 11
IO_2L_17_B10/DQSN5 B10
IO_2L_16_B9/DQS5 B9
IO_2L_15_B4/DQ5 B4
IO_2L_14_B3/DQ5 B3
IO_2L_13_A9/DQ5 A9
IO_2L_12_A8/DQ5 A8
IO_2L_11_D3/DQ6 D3
IO_2L_10_D2/DQ6 D2
IO_2L_9_C3/DQSN6 C3
IO_2L_8_C2/DQS6 C2
IO_2L_7_C1/DQ6 C1
IO_2L_6_B1/DQ6 B1
IO_2L_5_A3/DQSN7 A3
IO_2L_4_A2/DQS7 A2
IO_2L_3_E2/DQ7 E2 FLED1
IO_2L_2_E1/DQ7 E1 FLED2
IO_2L_1_F2/DQ7 F2 FLED3
IO_2L_0_F1/DQ7 F1 FLED4
U10F
IO_2A_47_AE5/DATA0/LVDS2A_1N/DQ24 AE5 TEMP_I2C_CLK 6
IO_2A_46_AE4/DATA1/LVDS2A_1P/DQ24 AE4 TEMP_I2C_DATA 6
IO_2A_45_AD9/DATA2/LVDS2A_2N/DQSN24 AD9 TEMP_OVERT_n 6
IO_2A_44_AE9/DATA3/LVDS2A_2P/DQS24 AE9 TEMP_ALERT_n 6
IO_2A_43_AD7/DATA4/LVDS2A_3N/DQ24 AD7
IO_2A_42_AE7/DATA5/LVDS2A_3P/DQ24 AE7 CLK_1_SDA 12
IO_2A_41_AF4/DATA6/LVDS2A_4N/DQSN25 AF4 CLK_1_SCL 12
IO_2A_40_AF3/DATA7/LVDS2A_4P/DQS25 AF3 CLK_2_SDA 12
IO_2A_39_AE6/DATA8/LVDS2A_5N/DQ25 AE6 CLK_2_SCL 12
IO_2A_38_AF6/DATA9/LVDS2A_5P/DQ25 AF6 CLK_3_SDA 12
IO_2A_37_AF8/DATA10/LVDS2A_6N/DQ25 AF8 CLK_3_SCL 12
IO_2A_36_AF7/DATA11/LVDS2A_6P/DQ25 AF7 CLK_4_SDA 12
IO_2A_35_AC8/DATA12/LVDS2A_7N/DQ26 AC8 CLK_4_SCL 12
IO_2A_34_AD8/DATA13/LVDS2A_7P/DQ26 AD8
IO_2A_33_AC10/DATA14/LVDS2A_8N/DQSN26 AC10
IO_2A_32_AD10/DATA15/LVDS2A_8P/DQS26 AD10
IO_2A_31_AB6/DATA16/LVDS2A_9N/DQ26 AB6
IO_2A_30_AB5/DATA17/LVDS2A_9P/DQ26 AB5
IO_2A_29_AC7/PLL_2A_CLKOUT1N/DATA18/LVDS2A_10N/DQSN27 AC7
IO_2A_28_AC6/PLL_2A_CLKOUT1P,PLL_2A_CLKOUT1,PLL_2A_FB1/DATA19/LVDS2A_10P/DQS27 AC6 R103 33 CLK_OUT_2 12
IO_2A_27_AB10/NCEO/DATA21/LVDS2A_11N/DQ27 AB10
IO_2A_26_AB9/RZQ_2A/LVDS2A_11P/DQ27 AB9
IO_2A_25_AC5/CLK_2A_1N/DATA20/LVDS2A_12N/DQ27 AC5 CLK_156p25M_1_N 11
IO_2A_24_AD5/CLK_2A_1P/DATA21/LVDS2A_12P/DQ27 AD5 CLK_156p25M_1_P 11
IO_2A_23_Y14/CLK_2A_0N/DATA22/LVDS2A_13N/DQ28 Y14
IO_2A_22_AA14/CLK_2A_0P/DATA23/LVDS2A_13P/DQ28 AA14 CLK_50M_1 11
IO_2A_21_AD13/DATA24/LVDS2A_14N/DQSN28 AD13
IO_2A_20_AD12/DATA25/LVDS2A_14P/DQS28 AD12
IO_2A_19_W15/PLL_2A_CLKOUT0N/DATA26/LVDS2A_15N/DQ28 W15
IO_2A_18_Y15/PLL_2A_CLKOUT0P,PLL_2A_CLKOUT0,PLL_2A_FB0/DATA27/LVDS2A_15P/DQ28 Y15 R105 33 CLK_OUT_1 12
IO_2A_17_AB14/DATA28/LVDS2A_16N/DQSN29 AB14
IO_2A_16_AB13/DATA29/LVDS2A_16P/DQS29 AB13
IO_2A_15_AB11/DATA30/LVDS2A_17N/DQ29 AB11
IO_2A_14_AC11/DATA31/LVDS2A_17P/DQ29 AC11
IO_2A_13_AC13/CLKUSR/LVDS2A_18N/DQ29 AC13 XCVR_CAL_CLK_100M
IO_2A_12_AC12/PR_REQUEST/LVDS2A_18P/DQ29 AC12
IO_2A_11_AA9/PR_READY/LVDS2A_19N/DQ30 AA9 SFP1_RX_LOS 13
IO_2A_10_AB8/NPERSTL0/LVDS2A_19P/DQ30 AB8 SFP1_TX_FAULT 13
IO_2A_9_W9/PR_DONE/LVDS2A_20N/DQSN30 W9 SFP1_TX_DIS 13
IO_2A_8_W8/LVDS2A_20P/DQS30 W8 SFP1_MOD_ABS 13
IO_2A_7_AA13/PR_ERROR/LVDS2A_21N/DQ30 AA13 SFP1_SCL 13
IO_2A_6_AA12/LVDS2A_21P/DQ30 AA12 SFP1_SDA 13
IO_2A_5_AA8/CVP_CONFDONE/LVDS2A_22N/DQSN31 AA8
IO_2A_4_AA7/LVDS2A_22P/DQS31 AA7
IO_2A_3_W10/INIT_DONE/LVDS2A_23N/DQ31 W10 CLK_DDR_SDA 8
IO_2A_2_Y9/DEV_OE/LVDS2A_23P/DQ31 Y9 CLK_DDR_SCL 8
IO_2A_1_AA11/CRC_ERROR/LVDS2A_24N/DQ31 AA11
IO_2A_0_Y10/DEV_CLRN/LVDS2A_24P/DQ31 Y10
+1V8_VCCIO
L8
220@100Mhz
C141 10uF
C142 1uF
X1
1 STBY
4 VCC
2 GND
3 OUTPUT
100MHz
R108 33 XCVR_CAL_CLK_100M
TP15
TP16
FLED1 R106 100 LED3 RED
FLED2 R107 100 LED4 RED
FLED3 R109 100 LED5 RED
FLED4 R110 100 LED6 RED

Title		
Size A3	Number	Revision
Date: 5/24/2025		Sheet of
File: D:\DDA\..\[09] - FPGA IO BANK 2A, 2L.SchDoc		Drawn By:

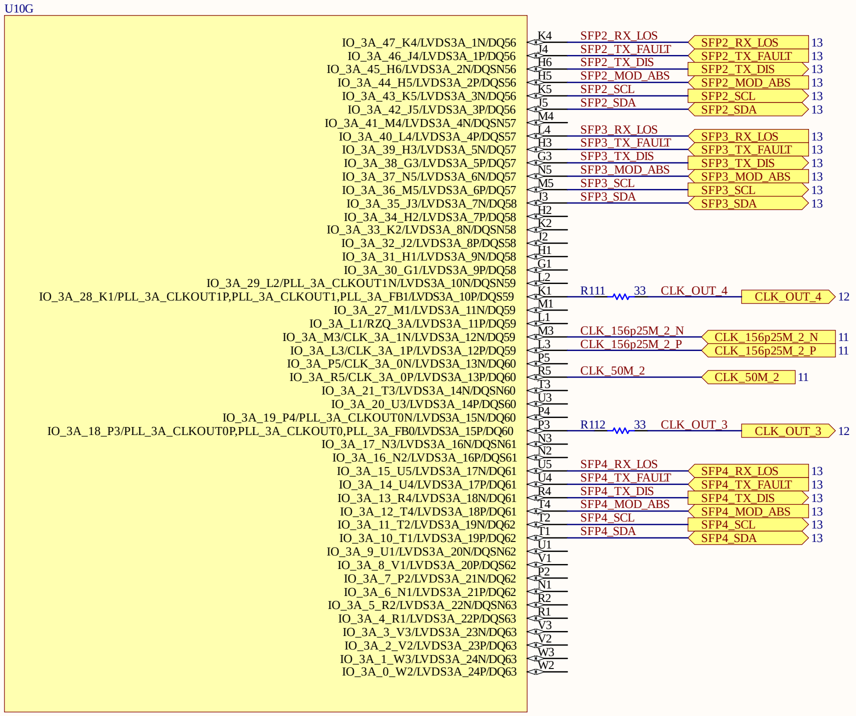
U10G
IO_3A_47_K4/LVDS3A_1N/DQ56
IO_3A_46_J4/LVDS3A_1P/DQ56
IO_3A_45_H6/LVDS3A_2N/DQSN56
IO_3A_44_H5/LVDS3A_2P/DQS56
IO_3A_43_K5/LVDS3A_3N/DQ56
IO_3A_42_J5/LVDS3A_3P/DQ56
IO_3A_41_M4/LVDS3A_4N/DQSN57
IO_3A_40_L4/LVDS3A_4P/DQS57
IO_3A_39_H3/LVDS3A_5N/DQ57
IO_3A_38_G3/LVDS3A_5P/DQ57
IO_3A_37_N5/LVDS3A_6N/DQ57
IO_3A_36_M5/LVDS3A_6P/DQ57
IO_3A_35_J3/LVDS3A_7N/DQ58
IO_3A_34_H2/LVDS3A_7P/DQ58
IO_3A_33_K2/LVDS3A_8N/DQSN58
IO_3A_32_J2/LVDS3A_8P/DQS58
IO_3A_31_H1/LVDS3A_9N/DQ58
IO_3A_30_G1/LVDS3A_9P/DQ58
IO_3A_29_L2/PLL_3A_CLKOUT1N/LVDS3A_10N/DQSN59
IO_3A_28_K1/PLL_3A_CLKOUT1P,PLL_3A_CLKOUT1,PLL_3A_FB1/LVDS3A_10P/DQS59
IO_3A_27_M1/LVDS3A_11N/DQ59
IO_3A_L1/RZQ_3A/LVDS3A_11P/DQ59
IO_3A_M3/CLK_3A_1N/LVDS3A_12N/DQ59
IO_3A_L3/CLK_3A_1P/LVDS3A_12P/DQ59
IO_3A_P5/CLK_3A_0N/LVDS3A_13N/DQ60
IO_3A_R5/CLK_3A_0P/LVDS3A_13P/DQ60
IO_3A_21_T3/LVDS3A_14N/DQSN60
IO_3A_20_U3/LVDS3A_14P/DQS60
IO_3A_19_P4/PLL_3A_CLKOUT0N/LVDS3A_15N/DQ60
IO_3A_18_P3/PLL_3A_CLKOUT0P,PLL_3A_CLKOUT0,PLL_3A_FB0/LVDS3A_15P/DQ60
IO_3A_17_N3/LVDS3A_16N/DQSN61
IO_3A_16_N2/LVDS3A_16P/DQS61
IO_3A_15_U5/LVDS3A_17N/DQ61
IO_3A_14_U4/LVDS3A_17P/DQ61
IO_3A_13_R4/LVDS3A_18N/DQ61
IO_3A_12_T4/LVDS3A_18P/DQ61
IO_3A_11_T2/LVDS3A_19N/DQ62
IO_3A_10_T1/LVDS3A_19P/DQ62
IO_3A_9_U1/LVDS3A_20N/DQSN62
IO_3A_8_V1/LVDS3A_20P/DQS62
IO_3A_7_P2/LVDS3A_21N/DQ62
IO_3A_6_N1/LVDS3A_21P/DQ62
IO_3A_5_R2/LVDS3A_22N/DQSN63
IO_3A_4_R1/LVDS3A_22P/DQS63
IO_3A_3_V3/LVDS3A_23N/DQ63
IO_3A_2_V2/LVDS3A_23P/DQ63
IO_3A_1_W3/LVDS3A_24N/DQ63
IO_3A_0_W2/LVDS3A_24P/DQ63
K4
J4
H6
H5
K5
J5
M4
L4
H3
G3
N5
M5
J3
H2
K2
J2
H1
G1
L2
K1
M1
L1
M3
L3
P5
R5
T3
U3
P4
P3
N3
N2
U5
U4
R4
T4
T2
T1
U1
V1
P2
N1
R2
R1
V3
V2
W3
W2
SFP2_RX_LOS
SFP2_RX_LOS
13
SFP2_TX_FAULT
SFP2_TX_FAULT
13
SFP2_TX_DIS
SFP2_TX_DIS
13
SFP2_MOD_ABS
SFP2_MOD_ABS
13
SFP2_SCL
SFP2_SCL
13
SFP2_SDA
SFP2_SDA
13
SFP3_RX_LOS
SFP3_RX_LOS
13
SFP3_TX_FAULT
SFP3_TX_FAULT
13
SFP3_TX_DIS
SFP3_TX_DIS
13
SFP3_MOD_ABS
SFP3_MOD_ABS
13
SFP3_SCL
SFP3_SCL
13
SFP3_SDA
SFP3_SDA
13
R111
33
CLK_OUT_4
CLK_OUT_4
12
CLK_156p25M_2_N
CLK_156p25M_2_N
11
CLK_156p25M_2_P
CLK_156p25M_2_P
11
CLK_50M_2
CLK_50M_2
11
R112
33
CLK_OUT_3
CLK_OUT_3
12
SFP4_RX_LOS
SFP4_RX_LOS
13
SFP4_TX_FAULT
SFP4_TX_FAULT
13
SFP4_TX_DIS
SFP4_TX_DIS
13
SFP4_MOD_ABS
SFP4_MOD_ABS
13
SFP4_SCL
SFP4_SCL
13
SFP4_SDA
SFP4_SDA
13

Title		
Size A3	Number	Revision
Date: 5/24/2025		Sheet of
File: D:\DDA\..\[10] - FPGA IO BANK 3A.SchDoc		Drawn By:

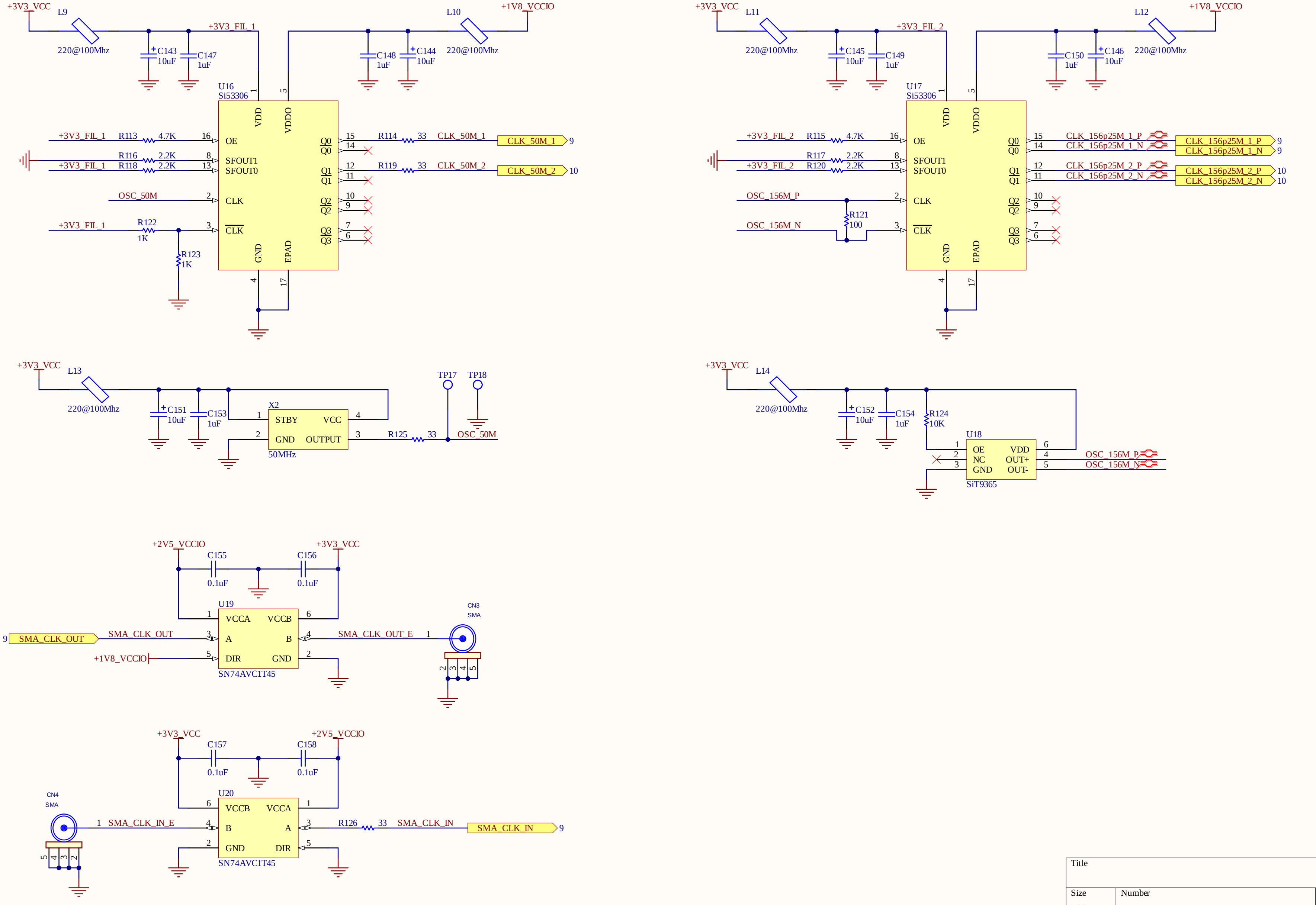

+3V3_VCC
L9
220@100Mhz
C143 10uF
C147 1uF
+3V3_FIL_1
U16 Si53306
VDD
VDDO
OE
SFOUT1
SFOUT0
CLK
CLK
GND
EPAD
Q0
Q0
Q1
Q1
Q2
Q2
Q3
Q3
+3V3_FIL_1 R113 4.7K
R116 2.2K
+3V3_FIL_1 R118 2.2K
OSC_50M
+3V3_FIL_1 R122 1K
R123 1K
R114 33 CLK_50M_1
R119 33 CLK_50M_2
CLK_50M_1 9
CLK_50M_2 10
L10
220@100Mhz
+1V8_VCCIO
C148 1uF
C144 10uF
+3V3_VCC
L11
220@100Mhz
C145 10uF
C149 1uF
+3V3_FIL_2
U17 Si53306
VDD
VDDO
OE
SFOUT1
SFOUT0
CLK
CLK
GND
EPAD
Q0
Q0
Q1
Q1
Q2
Q2
Q3
Q3
+3V3_FIL_2 R115 4.7K
R117 2.2K
+3V3_FIL_2 R120 2.2K
OSC_156M_P
OSC_156M_N
R121 100
CLK_156p25M_1_P
CLK_156p25M_1_N
CLK_156p25M_2_P
CLK_156p25M_2_N
CLK_156p25M_1_P 9
CLK_156p25M_1_N 9
CLK_156p25M_2_P 10
CLK_156p25M_2_N 10
L12
220@100Mhz
+1V8_VCCIO
C150 1uF
C146 10uF
+3V3_VCC
L13
220@100Mhz
C151 10uF
C153 1uF
X2
STBY
VCC
GND
OUTPUT
50MHz
R125 33
OSC_50M
TP17
TP18
+3V3_VCC
L14
220@100Mhz
C152 10uF
C154 1uF
R124 10K
U18
OE
NC
GND
VDD
OUT+
OUT-
SiT9365
OSC_156M_P
OSC_156M_N
+2V5_VCCIO
+3V3_VCC
C155 0.1uF
C156 0.1uF
U19
VCCA
VCCB
A
B
DIR
GND
SN74AVC1T45
9 SMA_CLK_OUT
SMA_CLK_OUT
+1V8_VCCIO
SMA_CLK_OUT_E
CN3 SMA
+3V3_VCC
+2V5_VCCIO
C157 0.1uF
C158 0.1uF
U20
VCCB
VCCA
B
A
GND
DIR
SN74AVC1T45
CN4 SMA
SMA_CLK_IN_E
R126 33 SMA_CLK_IN
SMA_CLK_IN 9

Title

Size A3

Number

Revision

Date: 5/24/2025

Sheet of

File: D:\DDA\..\[11] - MAIN CLOCKS.SchDoc

Drawn By:

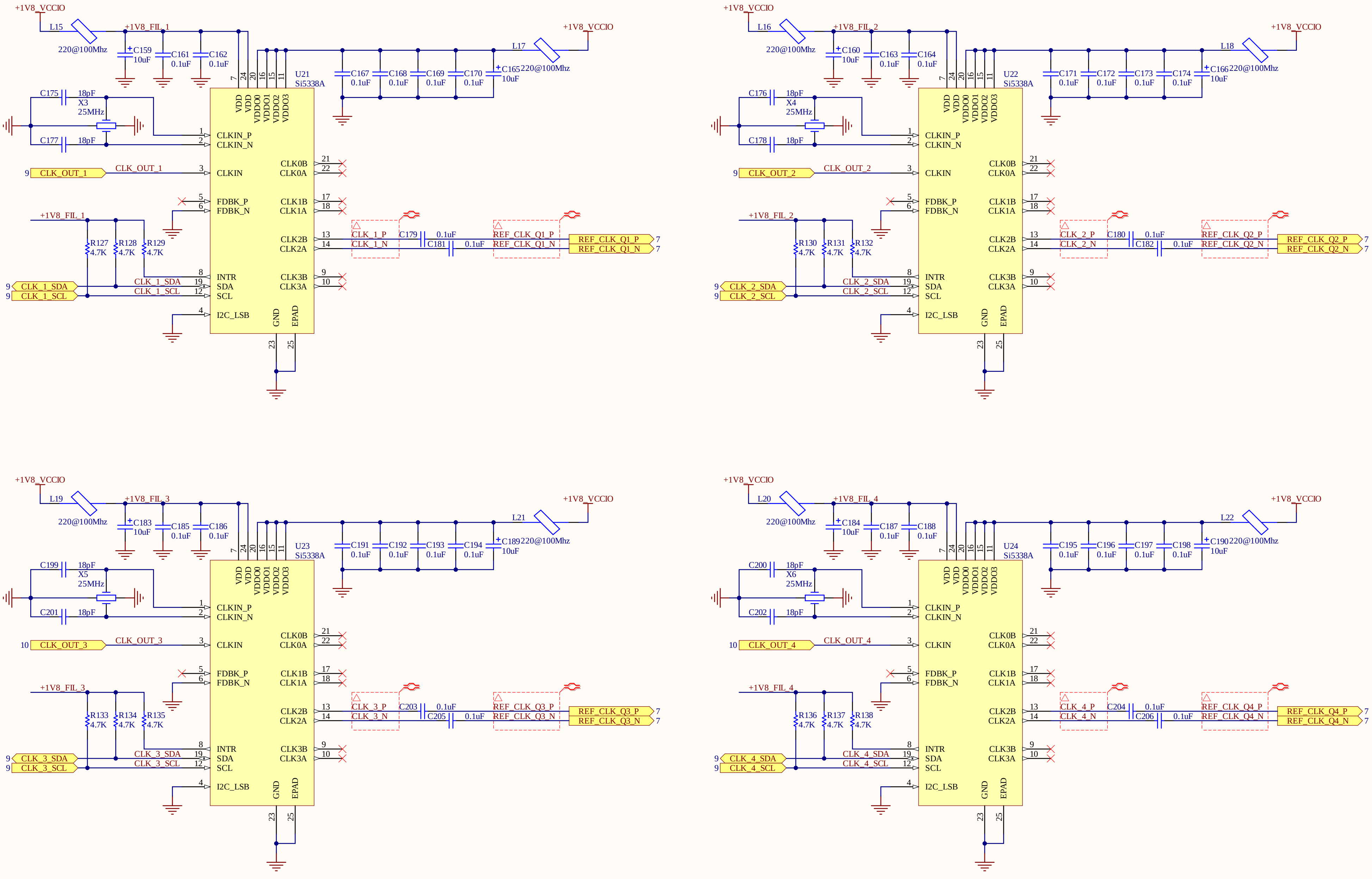
+1V8_VCCIO
L15
220@100Mhz
+1V8_FIL_1
C159 10uF
C161 0.1uF
C162 0.1uF
L17 220@100Mhz
C165 10uF
C167 0.1uF
C168 0.1uF
C169 0.1uF
C170 0.1uF
U21 Si5338A
VDD VDD VDDO0 VDDO1 VDDO2 VDDO3
C175 18pF
X3 25MHz
C177 18pF
CLKIN_P
CLKIN_N
CLK_OUT_1
CLKIN
FDBK_P
FDBK_N
CLK0B CLK0A
CLK1B CLK1A
CLK2B CLK2A
CLK3B CLK3A
+1V8_FIL_1
R127 4.7K
R128 4.7K
R129 4.7K
CLK_1_P
CLK_1_N
C179 0.1uF
C181 0.1uF
REF_CLK_Q1_P
REF_CLK_Q1_N
INTR
SDA
SCL
CLK_1_SDA
CLK_1_SCL
I2C_LSB
GND EPAD
L16 220@100Mhz
+1V8_FIL_2
C160 10uF
C163 0.1uF
C164 0.1uF
L18 220@100Mhz
C166 10uF
C171 0.1uF
C172 0.1uF
C173 0.1uF
C174 0.1uF
U22 Si5338A
C176 18pF
X4 25MHz
C178 18pF
CLK_OUT_2
+1V8_FIL_2
R130 4.7K
R131 4.7K
R132 4.7K
CLK_2_P
CLK_2_N
C180 0.1uF
C182 0.1uF
REF_CLK_Q2_P
REF_CLK_Q2_N
CLK_2_SDA
CLK_2_SCL
L19 220@100Mhz
+1V8_FIL_3
C183 10uF
C185 0.1uF
C186 0.1uF
L21 220@100Mhz
C189 10uF
C191 0.1uF
C192 0.1uF
C193 0.1uF
C194 0.1uF
U23 Si5338A
C199 18pF
X5 25MHz
C201 18pF
CLK_OUT_3
+1V8_FIL_3
R133 4.7K
R134 4.7K
R135 4.7K
CLK_3_P
CLK_3_N
C203 0.1uF
C205 0.1uF
REF_CLK_Q3_P
REF_CLK_Q3_N
CLK_3_SDA
CLK_3_SCL
L20 220@100Mhz
+1V8_FIL_4
C184 10uF
C187 0.1uF
C188 0.1uF
L22 220@100Mhz
C190 10uF
C195 0.1uF
C196 0.1uF
C197 0.1uF
C198 0.1uF
U24 Si5338A
C200 18pF
X6 25MHz
C202 18pF
CLK_OUT_4
+1V8_FIL_4
R136 4.7K
R137 4.7K
R138 4.7K
CLK_4_P
CLK_4_N
C204 0.1uF
C206 0.1uF
REF_CLK_Q4_P
REF_CLK_Q4_N
CLK_4_SDA
CLK_4_SCL

Title		
Size A3	Number	Revision
Date: 5/24/2025		Sheet of
File: D:\DDA\..\[12] - REFERENCE CLOCKS.SchDoc		Drawn By:

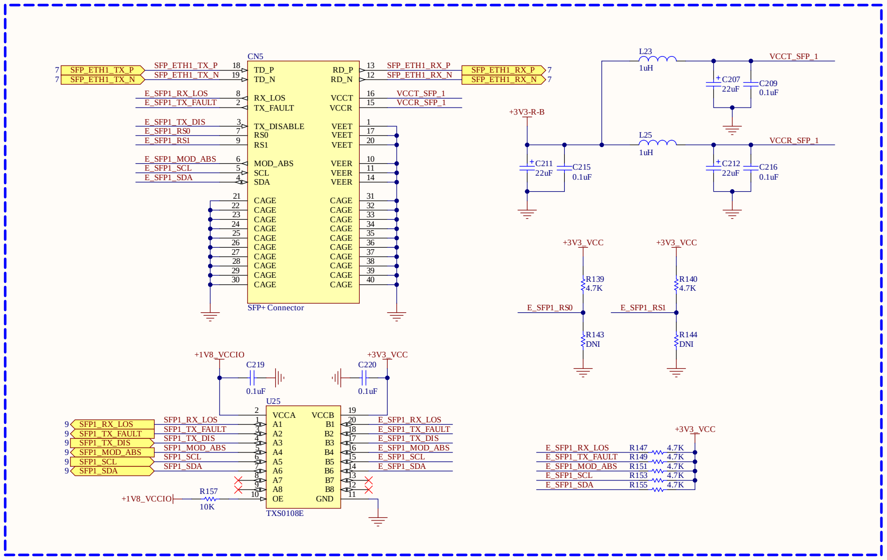
CN5
SFP+ Connector
7 SFP_ETH1_TX_P
7 SFP_ETH1_TX_N
SFP_ETH1_TX_P 18 TD_P
SFP_ETH1_TX_N 19 TD_N
E_SFP1_RX_LOS 8 RX_LOS
E_SFP1_TX_FAULT 2 TX_FAULT
E_SFP1_TX_DIS 3 TX_DISABLE
E_SFP1_RS0 7 RS0
E_SFP1_RS1 9 RS1
E_SFP1_MOD_ABS 6 MOD_ABS
E_SFP1_SCL 5 SCL
E_SFP1_SDA 4 SDA
21–30 CAGE
RD_P 13 SFP_ETH1_RX_P
RD_N 12 SFP_ETH1_RX_N
SFP_ETH1_RX_P 7
SFP_ETH1_RX_N 7
VCCT 16 VCCT_SFP_1
VCCR 15 VCCR_SFP_1
VEET 1, 17, 20
VEER 10, 11, 14
CAGE 31–40
L23 1uH
C207 22uF
C209 0.1uF
VCCT_SFP_1
+3V3-R-B
C211 22uF
C215 0.1uF
L25 1uH
C212 22uF
C216 0.1uF
VCCR_SFP_1
+3V3_VCC
R139 4.7K
E_SFP1_RS0
R143 DNI
+3V3_VCC
R140 4.7K
E_SFP1_RS1
R144 DNI
+1V8_VCCIO
C219 0.1uF
+3V3_VCC
C220 0.1uF
U25
TXS0108E
9 SFP1_RX_LOS
9 SFP1_TX_FAULT
9 SFP1_TX_DIS
9 SFP1_MOD_ABS
9 SFP1_SCL
9 SFP1_SDA
2 VCCA
SFP1_RX_LOS 1 A1
SFP1_TX_FAULT 3 A2
SFP1_TX_DIS 4 A3
SFP1_MOD_ABS 5 A4
SFP1_SCL 6 A5
SFP1_SDA 7 A6
8 A7
9 A8
+1V8_VCCIO R157 10K 10 OE
VCCB 19
B1 20 E_SFP1_RX_LOS
B2 18 E_SFP1_TX_FAULT
B3 17 E_SFP1_TX_DIS
B4 16 E_SFP1_MOD_ABS
B5 15 E_SFP1_SCL
B6 14 E_SFP1_SDA
B7 13
B8 12
GND 11
+3V3_VCC
E_SFP1_RX_LOS R147 4.7K
E_SFP1_TX_FAULT R149 4.7K
E_SFP1_MOD_ABS R151 4.7K
E_SFP1_SCL R153 4.7K
E_SFP1_SDA R155 4.7K

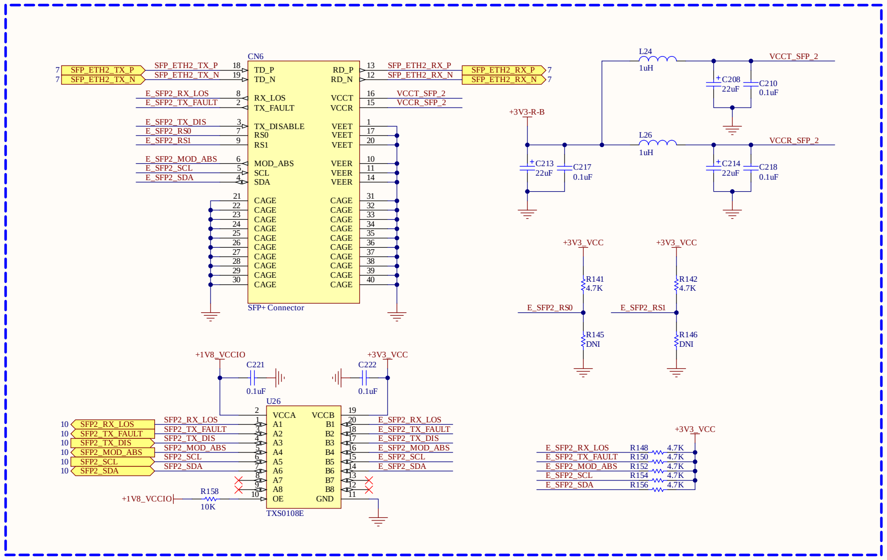
CN6
SFP+ Connector
7 SFP_ETH2_TX_P
7 SFP_ETH2_TX_N
SFP_ETH2_TX_P 18 TD_P
SFP_ETH2_TX_N 19 TD_N
E_SFP2_RX_LOS 8 RX_LOS
E_SFP2_TX_FAULT 2 TX_FAULT
E_SFP2_TX_DIS 3 TX_DISABLE
E_SFP2_RS0 7 RS0
E_SFP2_RS1 9 RS1
E_SFP2_MOD_ABS 6 MOD_ABS
E_SFP2_SCL 5 SCL
E_SFP2_SDA 4 SDA
21–30 CAGE
RD_P 13 SFP_ETH2_RX_P
RD_N 12 SFP_ETH2_RX_N
SFP_ETH2_RX_P 7
SFP_ETH2_RX_N 7
VCCT 16 VCCT_SFP_2
VCCR 15 VCCR_SFP_2
VEET 1, 17, 20
VEER 10, 11, 14
CAGE 31–40
L24 1uH
C208 22uF
C210 0.1uF
VCCT_SFP_2
+3V3-R-B
C213 22uF
C217 0.1uF
L26 1uH
C214 22uF
C218 0.1uF
VCCR_SFP_2
+3V3_VCC
R141 4.7K
E_SFP2_RS0
R145 DNI
+3V3_VCC
R142 4.7K
E_SFP2_RS1
R146 DNI
+1V8_VCCIO
C221 0.1uF
+3V3_VCC
C222 0.1uF
U26
TXS0108E
10 SFP2_RX_LOS
10 SFP2_TX_FAULT
10 SFP2_TX_DIS
10 SFP2_MOD_ABS
10 SFP2_SCL
10 SFP2_SDA
2 VCCA
SFP2_RX_LOS 1 A1
SFP2_TX_FAULT 3 A2
SFP2_TX_DIS 4 A3
SFP2_MOD_ABS 5 A4
SFP2_SCL 6 A5
SFP2_SDA 7 A6
8 A7
9 A8
+1V8_VCCIO R158 10K 10 OE
VCCB 19
B1 20 E_SFP2_RX_LOS
B2 18 E_SFP2_TX_FAULT
B3 17 E_SFP2_TX_DIS
B4 16 E_SFP2_MOD_ABS
B5 15 E_SFP2_SCL
B6 14 E_SFP2_SDA
B7 13
B8 12
GND 11
+3V3_VCC
E_SFP2_RX_LOS R148 4.7K
E_SFP2_TX_FAULT R150 4.7K
E_SFP2_MOD_ABS R152 4.7K
E_SFP2_SCL R154 4.7K
E_SFP2_SDA R156 4.7K

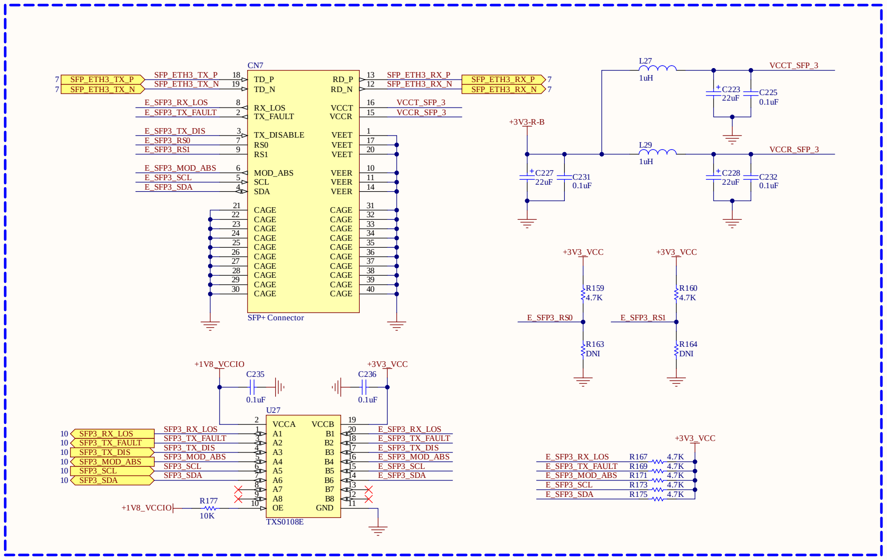
CN7
SFP+ Connector
7 SFP_ETH3_TX_P
7 SFP_ETH3_TX_N
SFP_ETH3_TX_P 18 TD_P
SFP_ETH3_TX_N 19 TD_N
E_SFP3_RX_LOS 8 RX_LOS
E_SFP3_TX_FAULT 2 TX_FAULT
E_SFP3_TX_DIS 3 TX_DISABLE
E_SFP3_RS0 7 RS0
E_SFP3_RS1 9 RS1
E_SFP3_MOD_ABS 6 MOD_ABS
E_SFP3_SCL 5 SCL
E_SFP3_SDA 4 SDA
21–30 CAGE
RD_P 13 SFP_ETH3_RX_P
RD_N 12 SFP_ETH3_RX_N
SFP_ETH3_RX_P 7
SFP_ETH3_RX_N 7
VCCT 16 VCCT_SFP_3
VCCR 15 VCCR_SFP_3
VEET 1, 17, 20
VEER 10, 11, 14
CAGE 31–40
L27 1uH
C223 22uF
C225 0.1uF
VCCT_SFP_3
+3V3-R-B
C227 22uF
C231 0.1uF
L29 1uH
C228 22uF
C232 0.1uF
VCCR_SFP_3
+3V3_VCC
R159 4.7K
E_SFP3_RS0
R163 DNI
+3V3_VCC
R160 4.7K
E_SFP3_RS1
R164 DNI
+1V8_VCCIO
C235 0.1uF
+3V3_VCC
C236 0.1uF
U27
TXS0108E
10 SFP3_RX_LOS
10 SFP3_TX_FAULT
10 SFP3_TX_DIS
10 SFP3_MOD_ABS
10 SFP3_SCL
10 SFP3_SDA
2 VCCA
SFP3_RX_LOS 1 A1
SFP3_TX_FAULT 3 A2
SFP3_TX_DIS 4 A3
SFP3_MOD_ABS 5 A4
SFP3_SCL 6 A5
SFP3_SDA 7 A6
8 A7
9 A8
+1V8_VCCIO R177 10K 10 OE
VCCB 19
B1 20 E_SFP3_RX_LOS
B2 18 E_SFP3_TX_FAULT
B3 17 E_SFP3_TX_DIS
B4 16 E_SFP3_MOD_ABS
B5 15 E_SFP3_SCL
B6 14 E_SFP3_SDA
B7 13
B8 12
GND 11
+3V3_VCC
E_SFP3_RX_LOS R167 4.7K
E_SFP3_TX_FAULT R169 4.7K
E_SFP3_MOD_ABS R171 4.7K
E_SFP3_SCL R173 4.7K
E_SFP3_SDA R175 4.7K

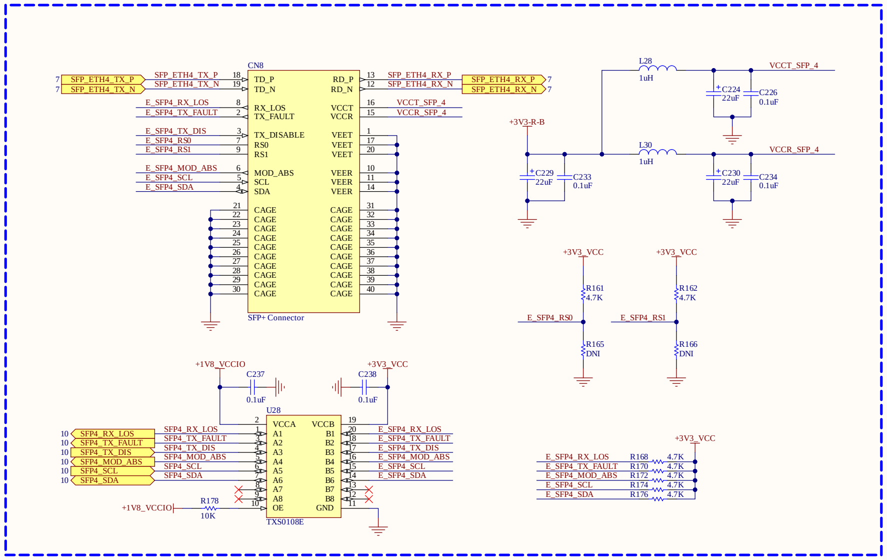
CN8
SFP+ Connector
7 SFP_ETH4_TX_P
7 SFP_ETH4_TX_N
SFP_ETH4_TX_P 18 TD_P
SFP_ETH4_TX_N 19 TD_N
E_SFP4_RX_LOS 8 RX_LOS
E_SFP4_TX_FAULT 2 TX_FAULT
E_SFP4_TX_DIS 3 TX_DISABLE
E_SFP4_RS0 7 RS0
E_SFP4_RS1 9 RS1
E_SFP4_MOD_ABS 6 MOD_ABS
E_SFP4_SCL 5 SCL
E_SFP4_SDA 4 SDA
21–30 CAGE
RD_P 13 SFP_ETH4_RX_P
RD_N 12 SFP_ETH4_RX_N
SFP_ETH4_RX_P 7
SFP_ETH4_RX_N 7
VCCT 16 VCCT_SFP_4
VCCR 15 VCCR_SFP_4
VEET 1, 17, 20
VEER 10, 11, 14
CAGE 31–40
L28 1uH
C224 22uF
C226 0.1uF
VCCT_SFP_4
+3V3-R-B
C229 22uF
C233 0.1uF
L30 1uH
C230 22uF
C234 0.1uF
VCCR_SFP_4
+3V3_VCC
R161 4.7K
E_SFP4_RS0
R165 DNI
+3V3_VCC
R162 4.7K
E_SFP4_RS1
R166 DNI
+1V8_VCCIO
C237 0.1uF
+3V3_VCC
C238 0.1uF
U28
TXS0108E
10 SFP4_RX_LOS
10 SFP4_TX_FAULT
10 SFP4_TX_DIS
10 SFP4_MOD_ABS
10 SFP4_SCL
10 SFP4_SDA
2 VCCA
SFP4_RX_LOS 1 A1
SFP4_TX_FAULT 3 A2
SFP4_TX_DIS 4 A3
SFP4_MOD_ABS 5 A4
SFP4_SCL 6 A5
SFP4_SDA 7 A6
8 A7
9 A8
+1V8_VCCIO R178 10K 10 OE
VCCB 19
B1 20 E_SFP4_RX_LOS
B2 18 E_SFP4_TX_FAULT
B3 17 E_SFP4_TX_DIS
B4 16 E_SFP4_MOD_ABS
B5 15 E_SFP4_SCL
B6 14 E_SFP4_SDA
B7 13
B8 12
GND 11
+3V3_VCC
E_SFP4_RX_LOS R168 4.7K
E_SFP4_TX_FAULT R170 4.7K
E_SFP4_MOD_ABS R172 4.7K
E_SFP4_SCL R174 4.7K
E_SFP4_SDA R176 4.7K

Title

Size A2
Number
Revision

Date: 5/24/2025
Sheet of
File: D:\DDA\..\[13] - SFP+ MODULES.SchDoc
Drawn By:

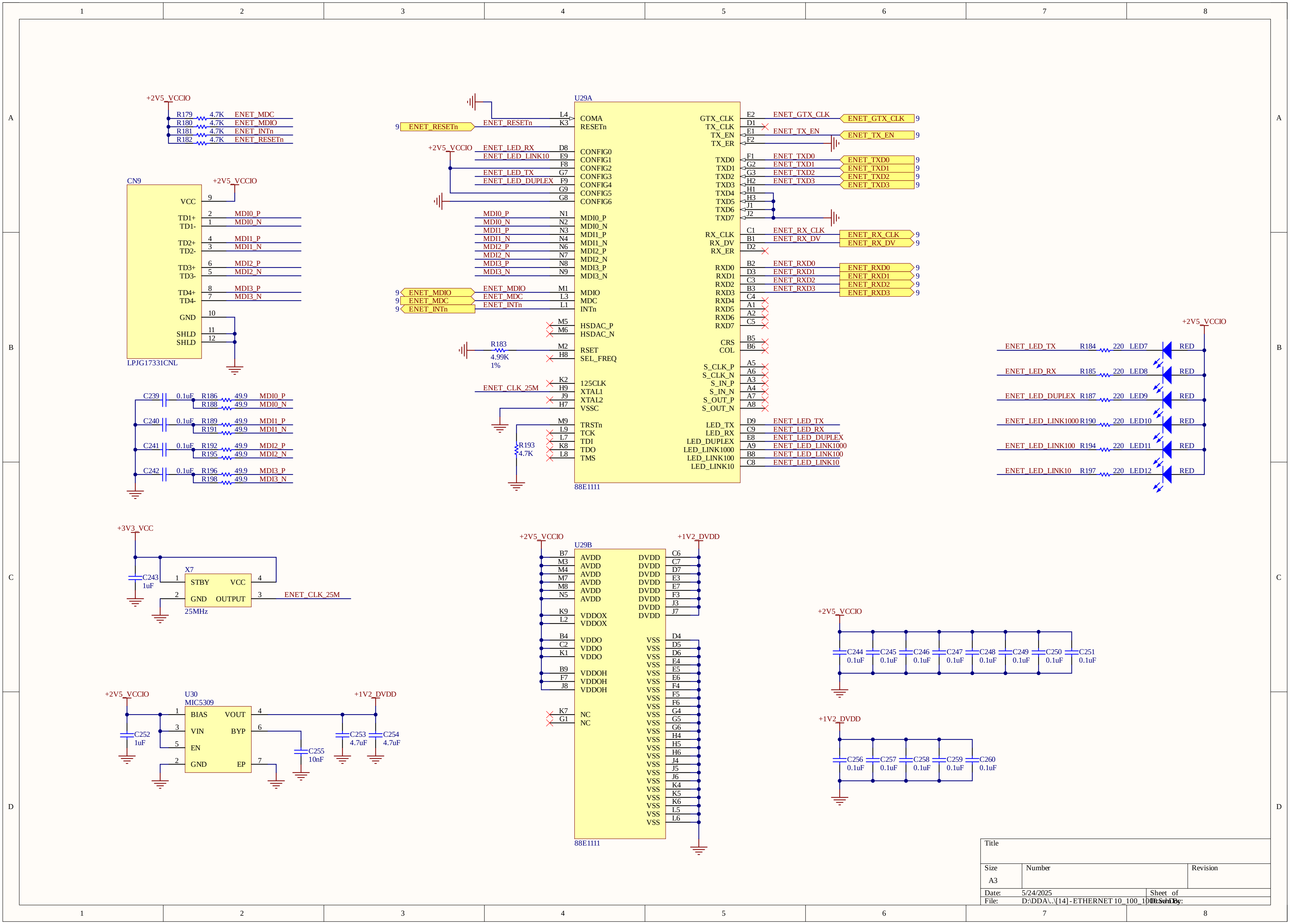

1
2
3
4
5
6
7
8
A
B
C
D
+2V5_VCCIO
R179 4.7K ENET_MDC
R180 4.7K ENET_MDIO
R181 4.7K ENET_INTn
R182 4.7K ENET_RESETn
CN9
VCC 9
TD1+ 2 MDI0_P
TD1- 1 MDI0_N
TD2+ 4 MDI1_P
TD2- 3 MDI1_N
TD3+ 6 MDI2_P
TD3- 5 MDI2_N
TD4+ 8 MDI3_P
TD4- 7 MDI3_N
GND 10
SHLD 11
SHLD 12
LPJG17331CNL
C239 0.1uF R186 49.9 MDI0_P
R188 49.9 MDI0_N
C240 0.1uF R189 49.9 MDI1_P
R191 49.9 MDI1_N
C241 0.1uF R192 49.9 MDI2_P
R195 49.9 MDI2_N
C242 0.1uF R196 49.9 MDI3_P
R198 49.9 MDI3_N
U29A
9 ENET_RESETn
ENET_RESETn K3 RESETn
L4 COMA
ENET_LED_RX D8 CONFIG0
ENET_LED_LINK10 E9 CONFIG1
F8 CONFIG2
ENET_LED_TX G7 CONFIG3
ENET_LED_DUPLEX F9 CONFIG4
G9 CONFIG5
G8 CONFIG6
MDI0_P N1 MDI0_P
MDI0_N N2 MDI0_N
MDI1_P N3 MDI1_P
MDI1_N N4 MDI1_N
MDI2_P N6 MDI2_P
MDI2_N N7 MDI2_N
MDI3_P N8 MDI3_P
MDI3_N N9 MDI3_N
9 ENET_MDIO
9 ENET_MDC
9 ENET_INTn
ENET_MDIO M1 MDIO
ENET_MDC L3 MDC
ENET_INTn L1 INTn
M5 HSDAC_P
M6 HSDAC_N
R183 4.99K 1% M2 RSET
H8 SEL_FREQ
K2 125CLK
ENET_CLK_25M H9 XTAL1
J9 XTAL2
H7 VSSC
M9 TRSTn
R193 4.7K
L9 TCK
L7 TDI
K8 TDO
L8 TMS
88E1111
GTX_CLK E2 ENET_GTX_CLK
TX_CLK D1
TX_EN E1 ENET_TX_EN
TX_ER F2
TXD0 F1 ENET_TXD0
TXD1 G2 ENET_TXD1
TXD2 G3 ENET_TXD2
TXD3 H2 ENET_TXD3
TXD4 H1
TXD5 H3
TXD6 J1
TXD7 J2
ENET_GTX_CLK 9
ENET_TX_EN 9
ENET_TXD0 9
ENET_TXD1 9
ENET_TXD2 9
ENET_TXD3 9
RX_CLK C1 ENET_RX_CLK
RX_DV B1 ENET_RX_DV
RX_ER D2
ENET_RX_CLK 9
ENET_RX_DV 9
RXD0 B2 ENET_RXD0
RXD1 D3 ENET_RXD1
RXD2 C3 ENET_RXD2
RXD3 B3 ENET_RXD3
RXD4 C4
RXD5 A1
RXD6 A2
RXD7 C5
ENET_RXD0 9
ENET_RXD1 9
ENET_RXD2 9
ENET_RXD3 9
CRS B5
COL B6
S_CLK_P A5
S_CLK_N A6
S_IN_P A3
S_IN_N A4
S_OUT_P A7
S_OUT_N A8
LED_TX D9 ENET_LED_TX
LED_RX C9 ENET_LED_RX
LED_DUPLEX E8 ENET_LED_DUPLEX
LED_LINK1000 A9 ENET_LED_LINK1000
LED_LINK100 B8 ENET_LED_LINK100
LED_LINK10 C8 ENET_LED_LINK10
ENET_LED_TX R184 220 LED7 RED
ENET_LED_RX R185 220 LED8 RED
ENET_LED_DUPLEX R187 220 LED9 RED
ENET_LED_LINK1000 R190 220 LED10 RED
ENET_LED_LINK100 R194 220 LED11 RED
ENET_LED_LINK10 R197 220 LED12 RED
+3V3_VCC
C243 1uF
X7
1 STBY
VCC 4
2 GND
OUTPUT 3 ENET_CLK_25M
25MHz
U30
MIC5309
1 BIAS
VOUT 4
3 VIN
BYP 6
5 EN
2 GND
EP 7
C252 1uF
+1V2_DVDD
C253 4.7uF
C254 4.7uF
C255 10nF
U29B
B7 AVDD
M3 AVDD
M4 AVDD
M7 AVDD
M8 AVDD
N5 AVDD
K9 VDDOX
L2 VDDOX
B4 VDDO
C2 VDDO
K1 VDDO
B9 VDDOH
F7 VDDOH
J8 VDDOH
K7 NC
G1 NC
DVDD C6
DVDD C7
DVDD D7
DVDD E3
DVDD E7
DVDD F3
DVDD J3
DVDD J7
VSS D4
VSS D5
VSS D6
VSS E4
VSS E5
VSS E6
VSS F4
VSS F5
VSS F6
VSS G4
VSS G5
VSS G6
VSS H4
VSS H5
VSS H6
VSS J4
VSS J5
VSS J6
VSS K4
VSS K5
VSS K6
VSS L5
VSS L6
88E1111
C244 0.1uF
C245 0.1uF
C246 0.1uF
C247 0.1uF
C248 0.1uF
C249 0.1uF
C250 0.1uF
C251 0.1uF
C256 0.1uF
C257 0.1uF
C258 0.1uF
C259 0.1uF
C260 0.1uF

Title

Size	Number	Revision
A3		

Date: 5/24/2025 Sheet of
File: D:\DDA\..\[14]-ETHERNET 10_100_1000.SchDoc Drawn By: