Jacob Eldred
Engineering and Art Portfolio

jacob.eldred@yale.edu

Fall 2023

Neon Battle Axe

Permanently Installed Morse Dining Hall, Yale, 2022

- I proposed a 9-foot tall sculpture, which was permanently installed in Eero Saarinen-designed Morse College dining hall.
- Consulted with local neon master, machinist, and woodworker on design, and then worked to make the parts myself in each of their studios.
- Glass sign mounted on acrylic with a hidden aluminum frame
- Project budget: $20k
- Timeline: 8 months, proposal to install.

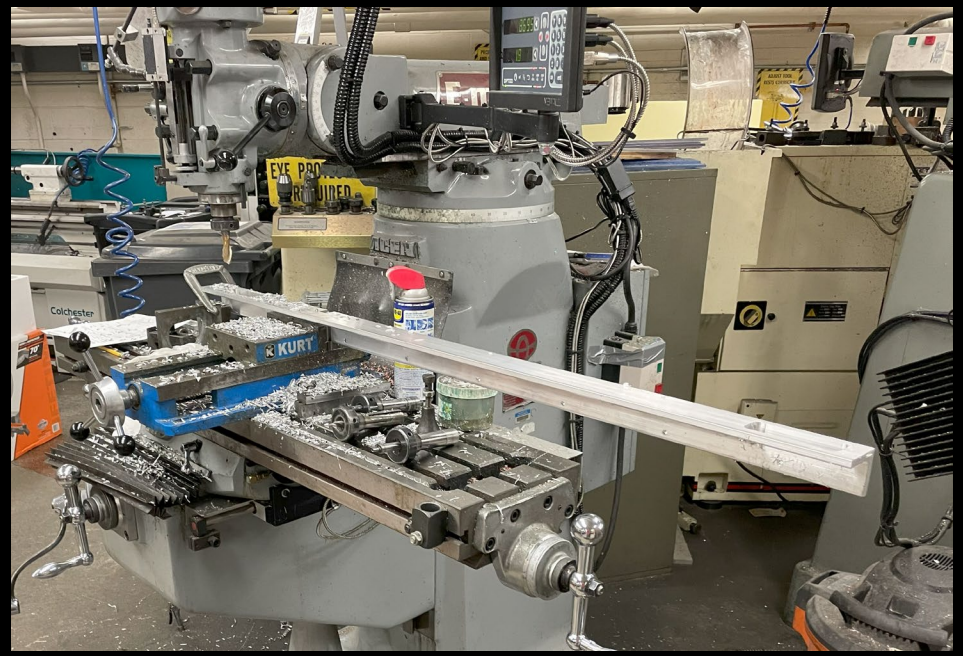

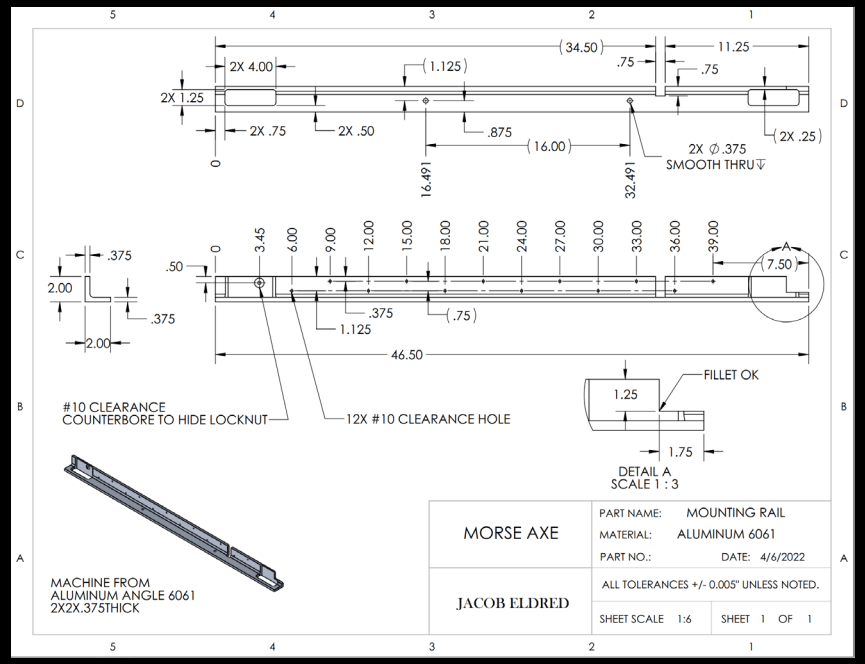

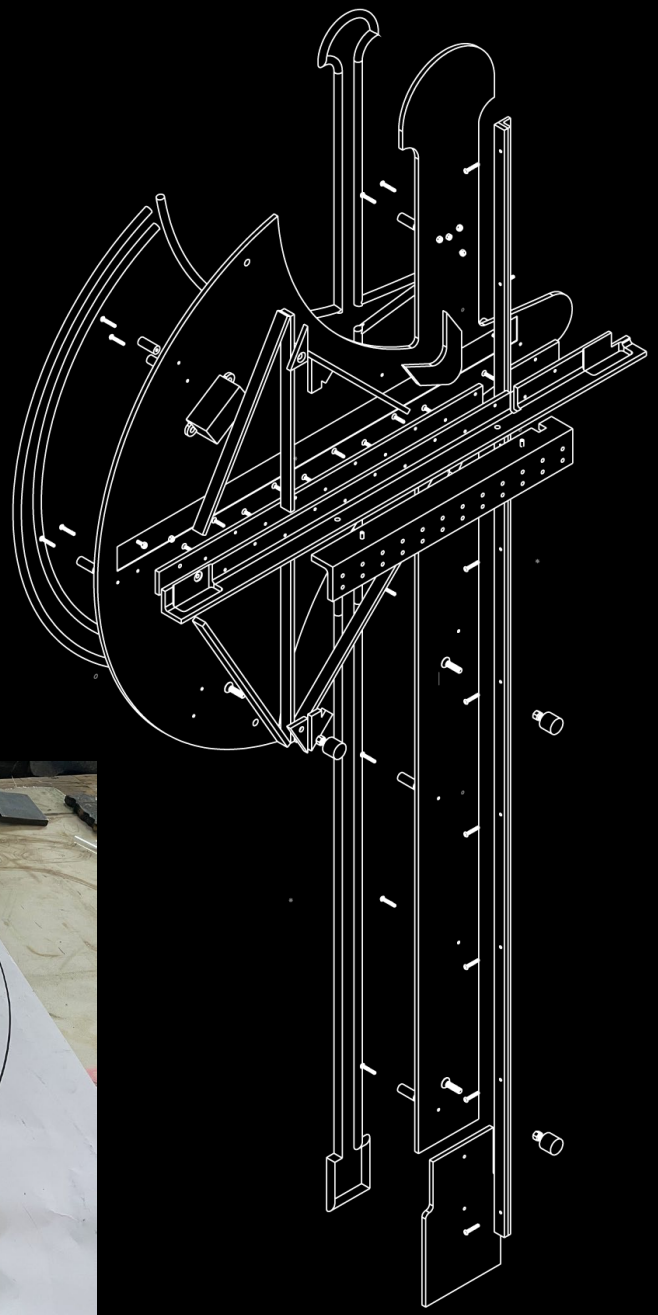

I designed and made all parts, including mounting hardware (above).

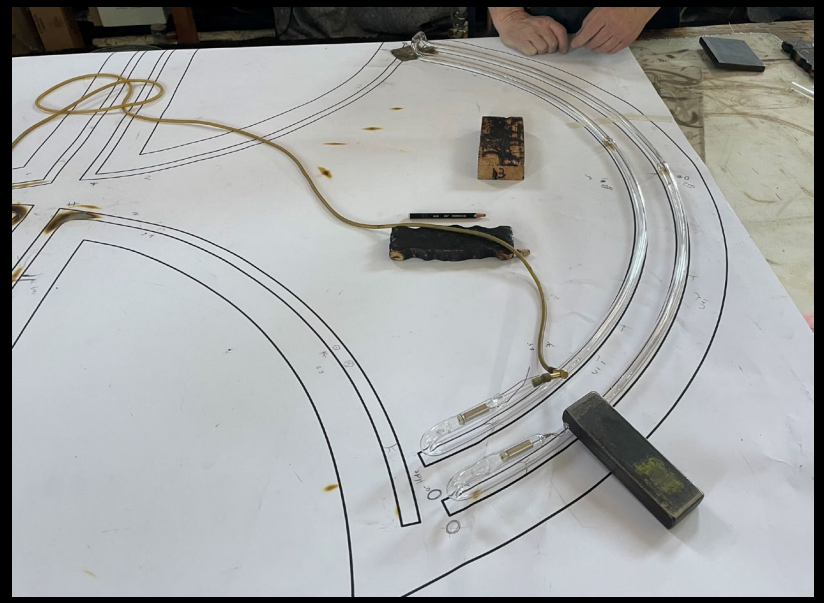

EXIT

Case Study: Vacuum Chuck

Yale NanoProbe Group 2021-22

Background:

- Nano indenters are used to perform nano-scale mechanical testing by compressing small areas of a surface (~.01mm) with precise tips (also ~.01mm) and generating a stress-strain curve.
- The standard procedure is to mount samples of up to 10 x 10mm onto ‘pucks,’ which are held in the holder, shown at right. The samples are tedious to polish, mount, and test, especially because samples are small and each height must be re-zeroed before testing.
- It would be possible to obtain data much more quickly if the samples were created on a silicon wafer, for example by vacuum sputter deposition, and then analyzed all at once.
- Scope: Design and make vacuum chuck for holding silicon wafers (100mm, 4”, and 3”) in nano-indenter.
- Timeline: 1 year
- Budget: $1500 (excl. vacuum pump)

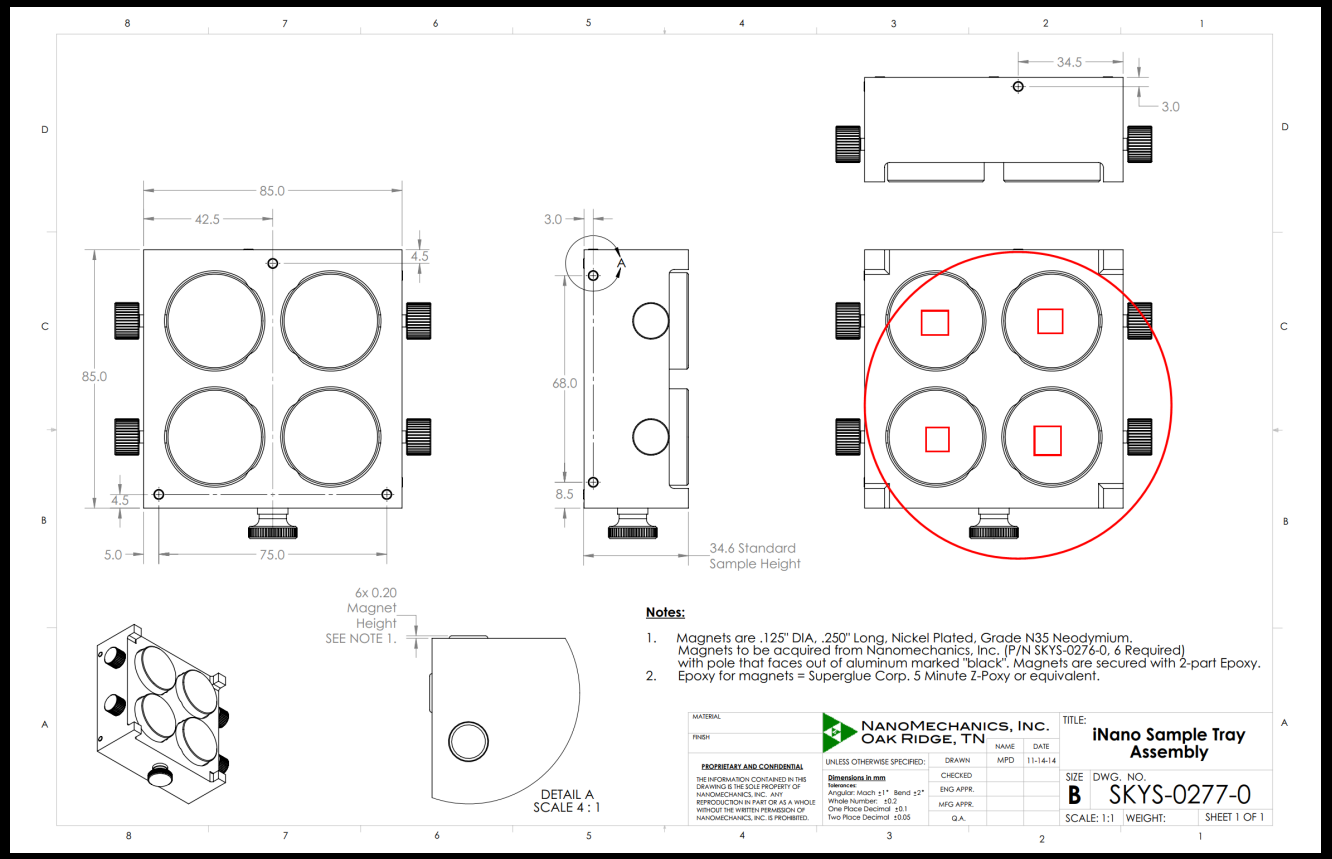

Standard mounting assembly. Rectangles show approx. sample size, and circle is approx. wafer size.

Version 1

- For inspiration, used drawings of similar part at Stanford Linear Accelerator (SLAC) which showed a two-part design with a rubber gasket (drawings not shown).
- Developed simpler system that could be milled from a single block of aluminum in five setups. (SLAC version was minimum 10.)
- Programmed CNC path for facing, channels, pecking many holes.
- Idea for relief channel came from talking to a high-end polishing contractor at a manufacturing conference.
- Designed jig for aligning wafers smaller than max size.
- Made jig for holding magnets while epoxy cured, to precision of ~.005”.

- Failure: Silicon wafer held, but PI wanted to be able to hold wafer and turn off vacuum pump. Tested and reapplied seals, no improvement.
- Planned solution: Face the wafer mount on a lathe for smoother contact to reduce leaks.

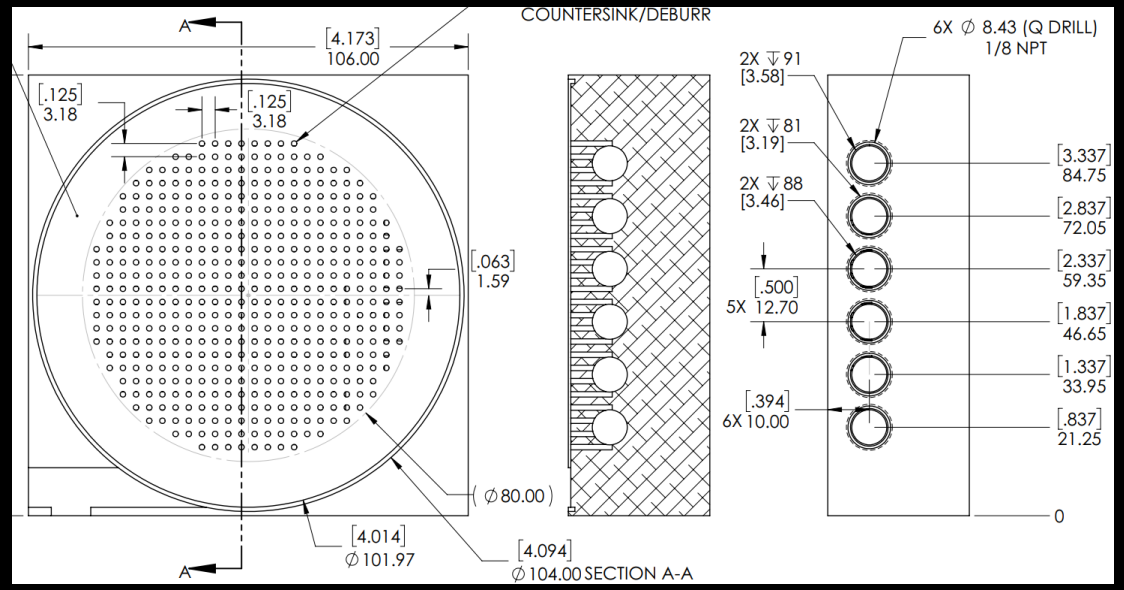

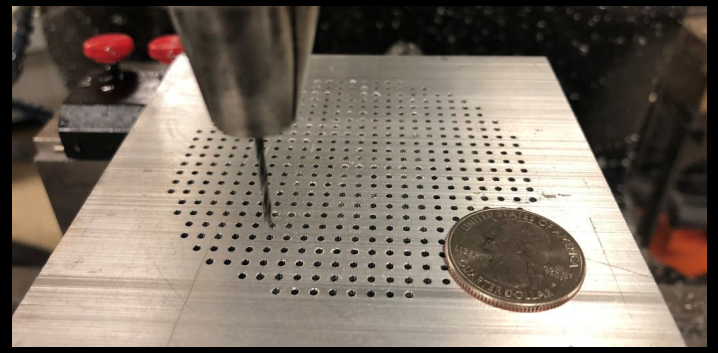

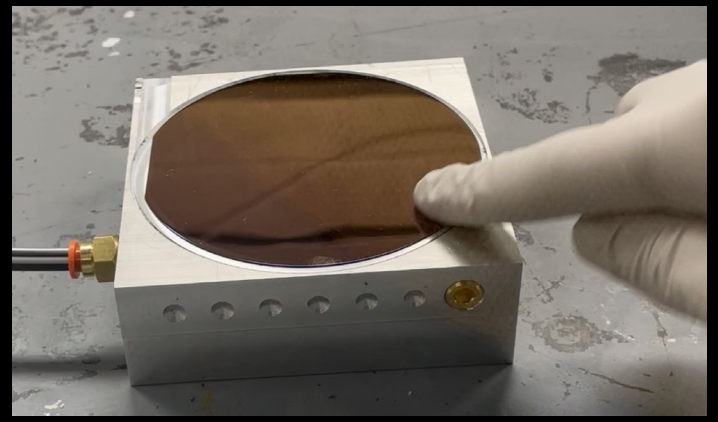

Version 2

- Had professional machinist face top surface on lathe. Indicated to within 3 ten thousandths of an inch.

- Failure 1: Holding vacuum with pump off is unreasonable, and no other professor or technician had heard of it being done.
- Failure 2: The original sample holder is designed for 4 10 x 10mm samples, so we underestimated the parallelism tolerance between the wafer surface and the base. The vacuum chuck would have to be much more precise than the original holder.

- Solution for Version 3: Remove magnets, press-fit hollow stainless steel pins, mount chuck on surface grinder with wafer surface as reference, grind steel pins, then epoxy magnets inside the pins, so the ground surface remains the mating surface.
- This version was successful and now will be integrated into the machine and testing methods.

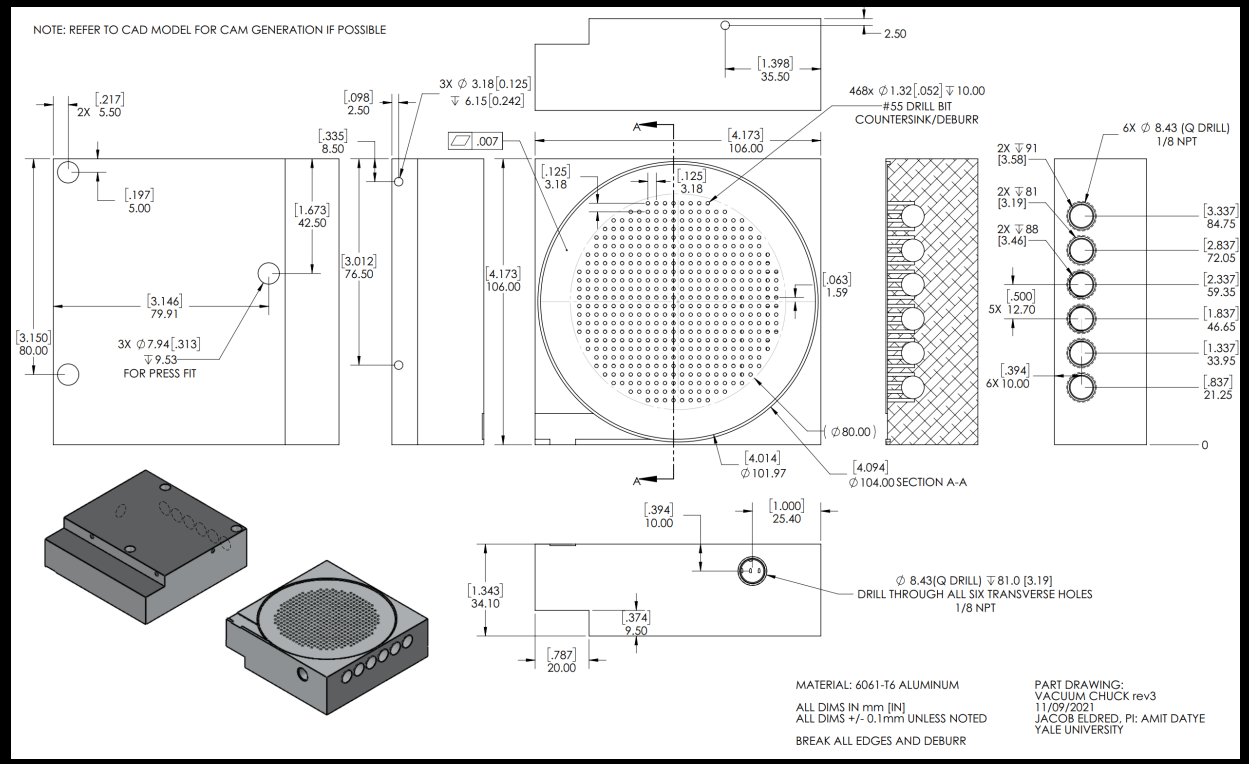

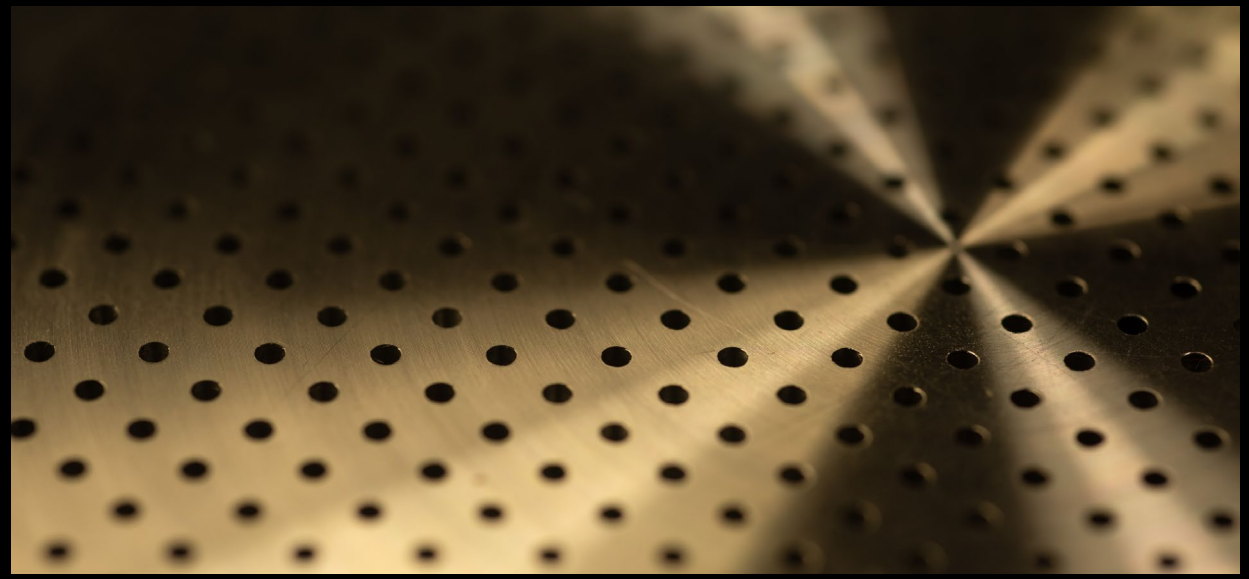

Version 3

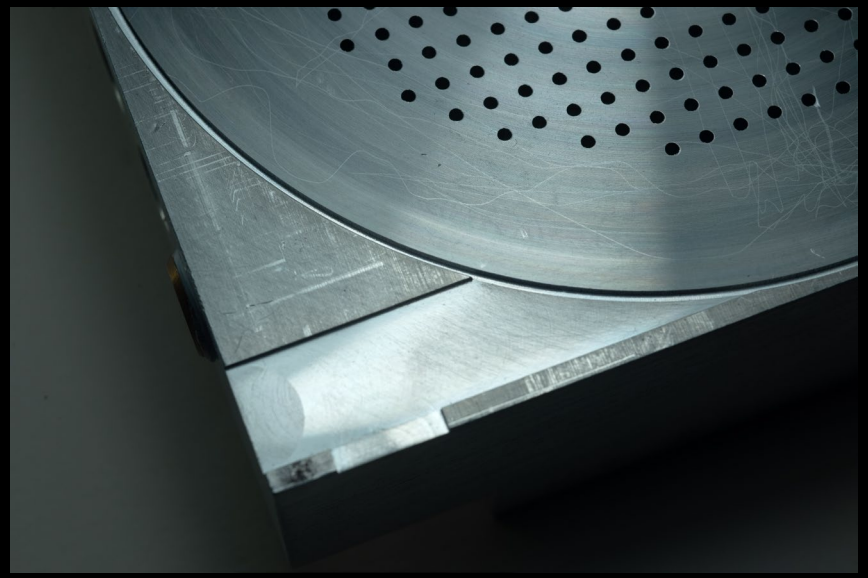

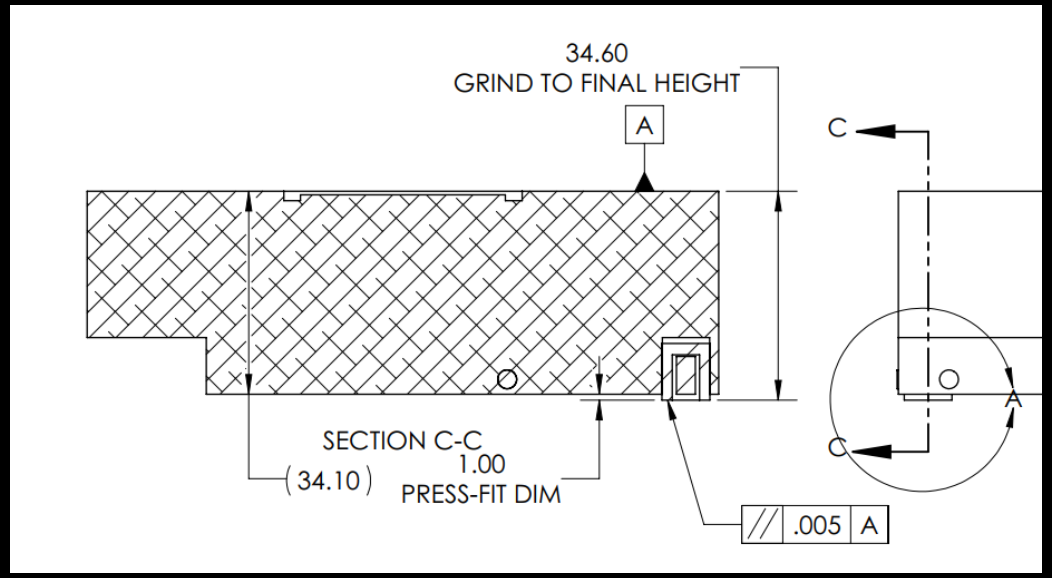

ITEM NO.	PART NUMBER	DESCRIPTION	QTY.
1	Base Plate rev2	Use McMaster 8975K501	1
2	50785K112	High-Pressure Brass Pipe Fitting	6
3	SKYS-0276-0	.125" Dia x .250" L, N35 Neodymium, Nickel Plated	6
4	2901A231	Black-Oxide High-Speed Steel Drill Bit (#55)	1
5	3110A68	Extended-Length Drill Bit (Q)	1
6	TBD	EPOXY FOR MAGNETS	A/R
7	Alignment Insert Sample		1
8	8832A76	Carbide Two Flute End Mill	1

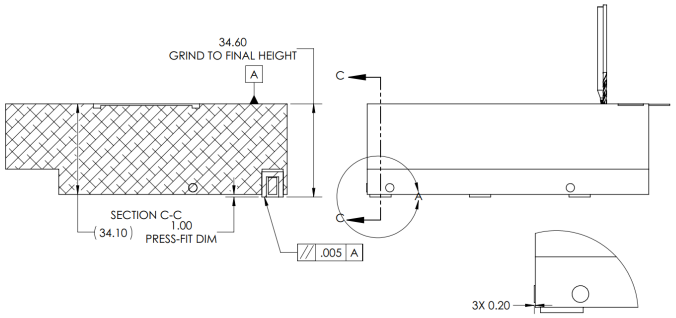

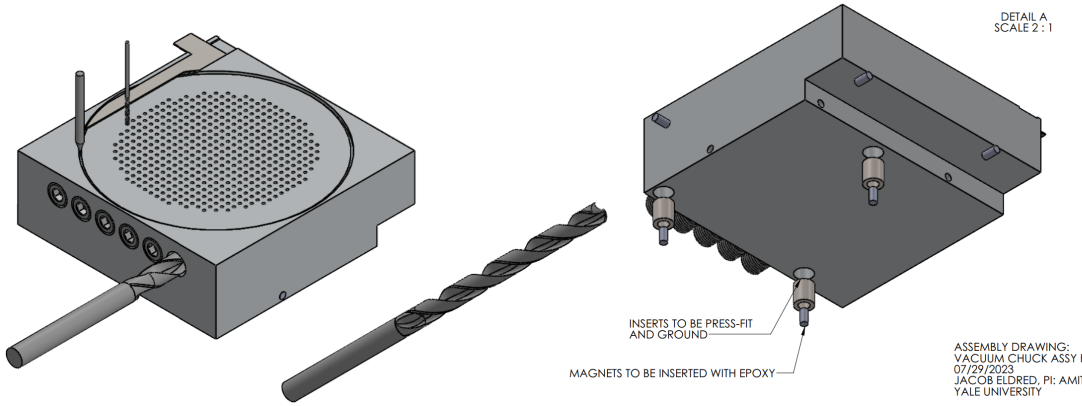

ASSEMBLY DRAWING:
VACUUM CHUCK ASSY REV3
07/29/2023
JACOB ELDRED, PI: AMIT DATYE
YALE UNIVERSITY

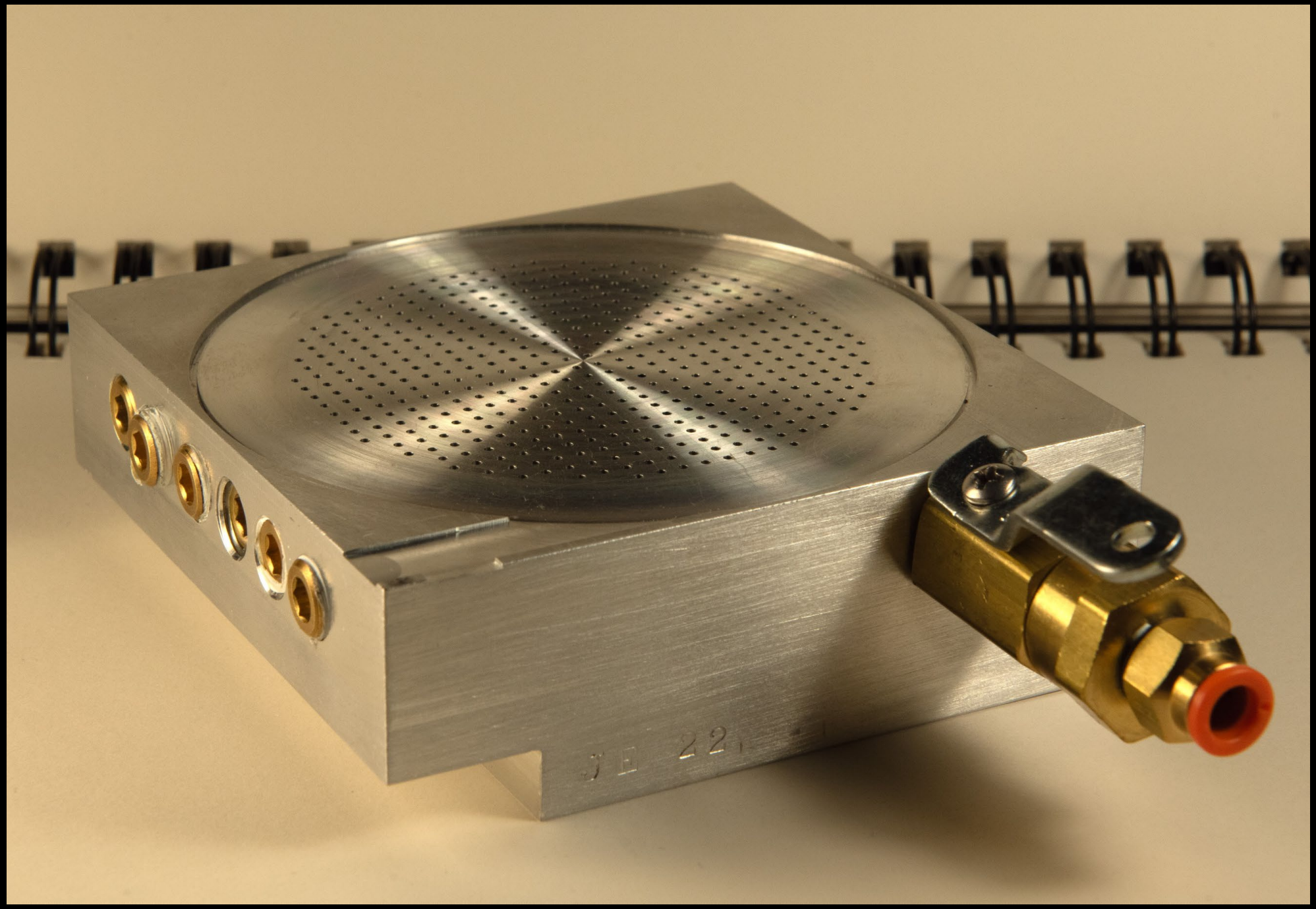

3D Auxetic Structures
Lithoz GmbH and Incus GmbH of Vienna, Summer 2023

- Auxetics are metamaterials with a negative Poisson's Ratio, so when they are compressed in one direction, they shrink in the orthogonal direction (both orthogonal directions, in the case of 3D structures).

- 3D auxetic lattices have been rarely demonstrated in metal or ceramics. While working at Lithoz, a ceramic 3D printer manufacturer in Vienna, my design was the second successful auxetic print they had produced since last trying seven years earlier.

- I then approached Incus, Lithoz' sister company which prints in metal, and they agreed to print a few samples for demonstration purposes. I will refine the design, re-print and analyze them in Spring 2024, possibly in a paper.

- This design is 9.32x9.32x10.2mm and has ~91% empty volume.

- The ribs are 150x200 µm

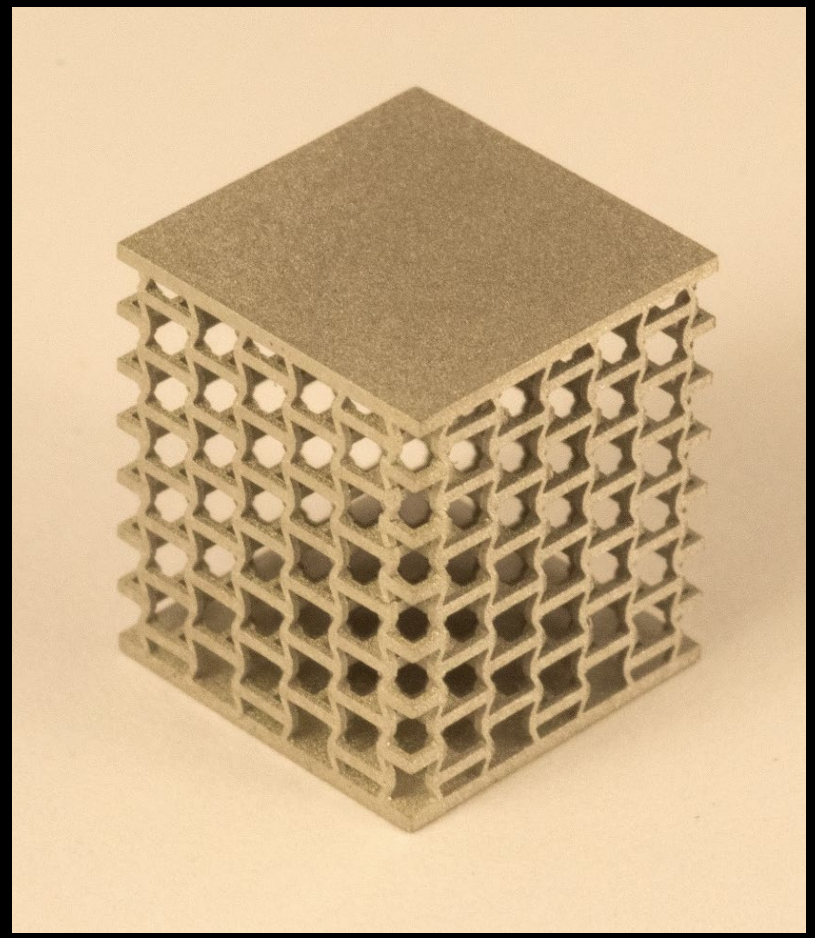

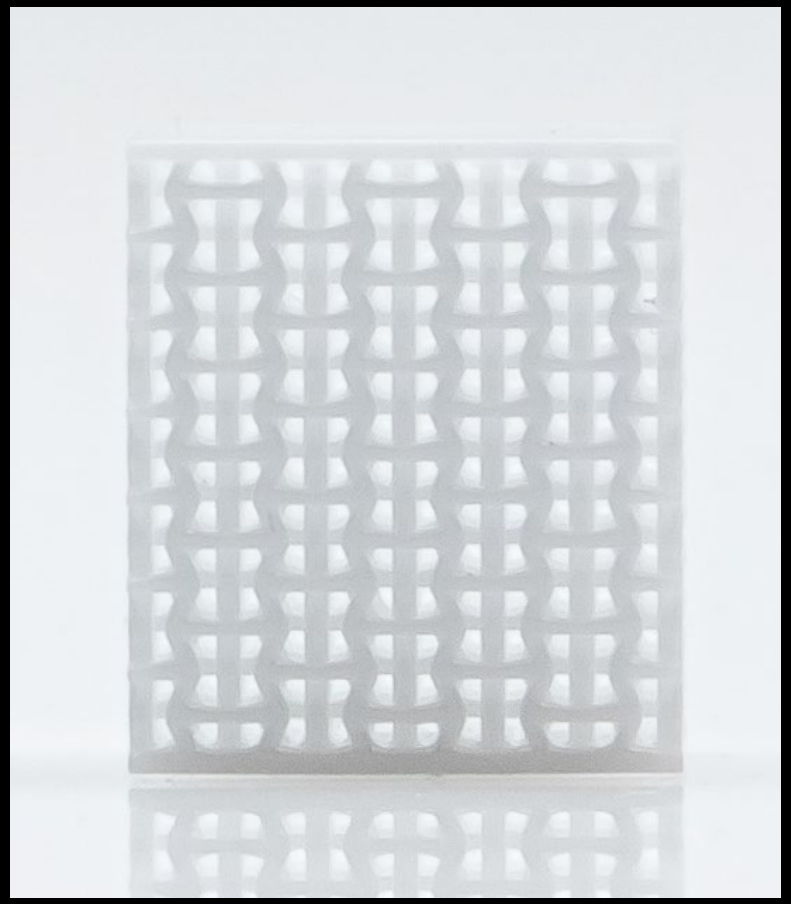

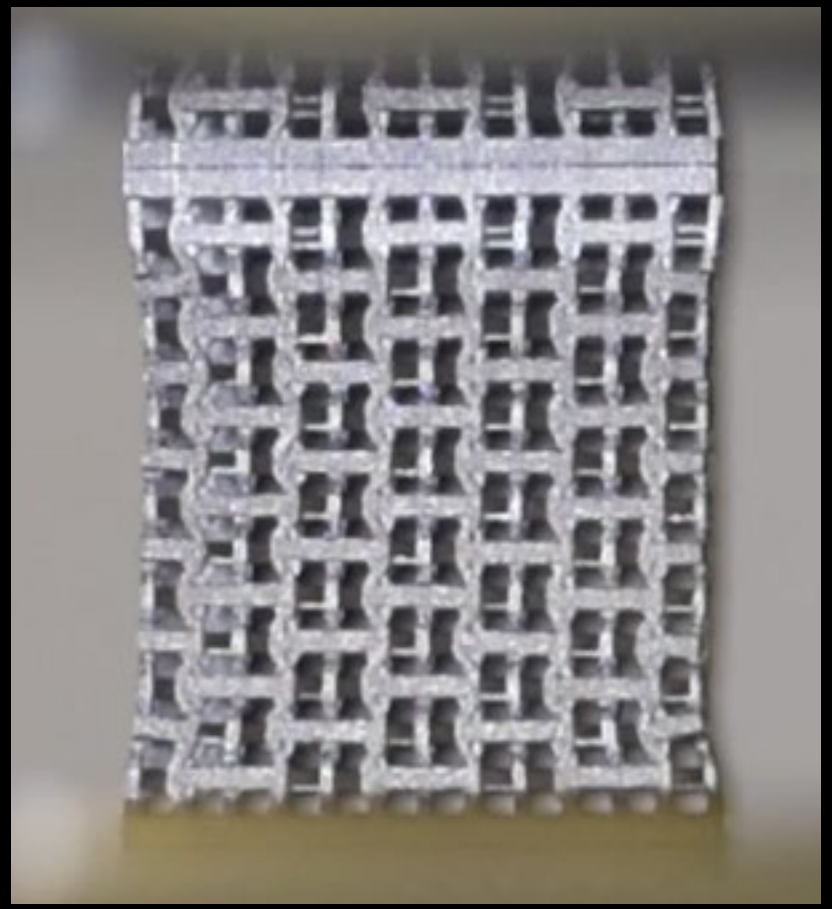

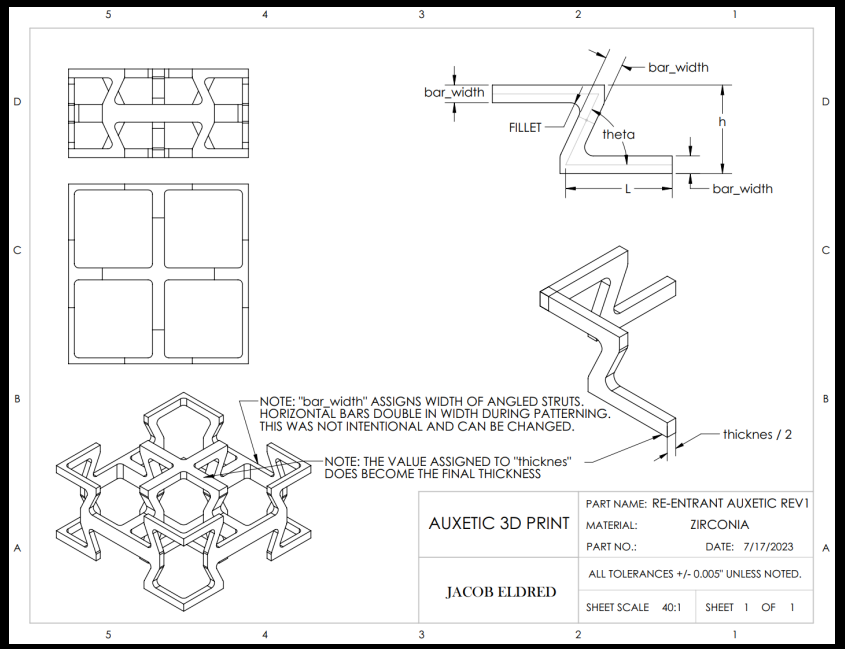

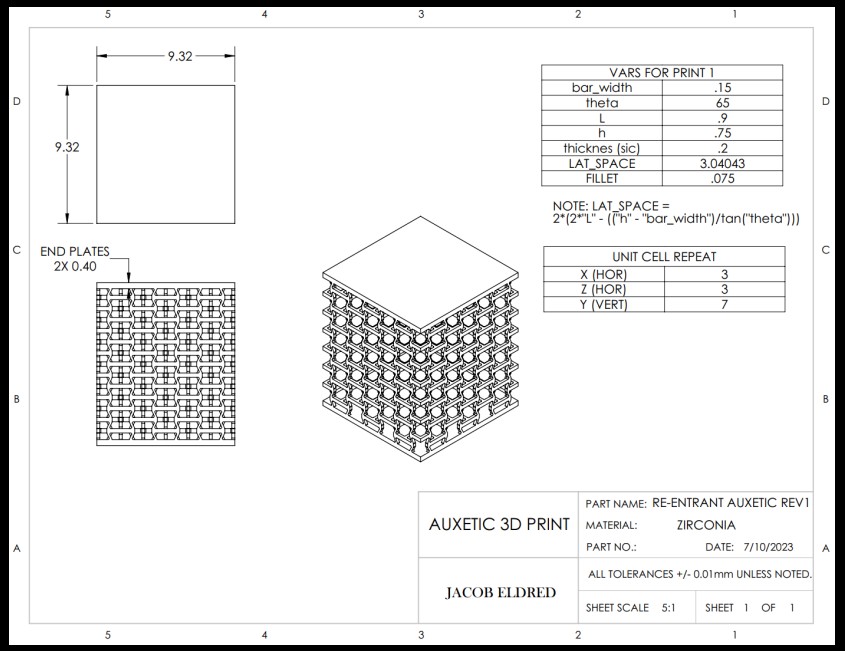

Left to Right:

- Zirconia Sample
- Freeze-frame of 316L SS sample being crushed. Auxetic behavior is visible.
- Mechanical drawings demonstrating the repeat unit and the unit cell.

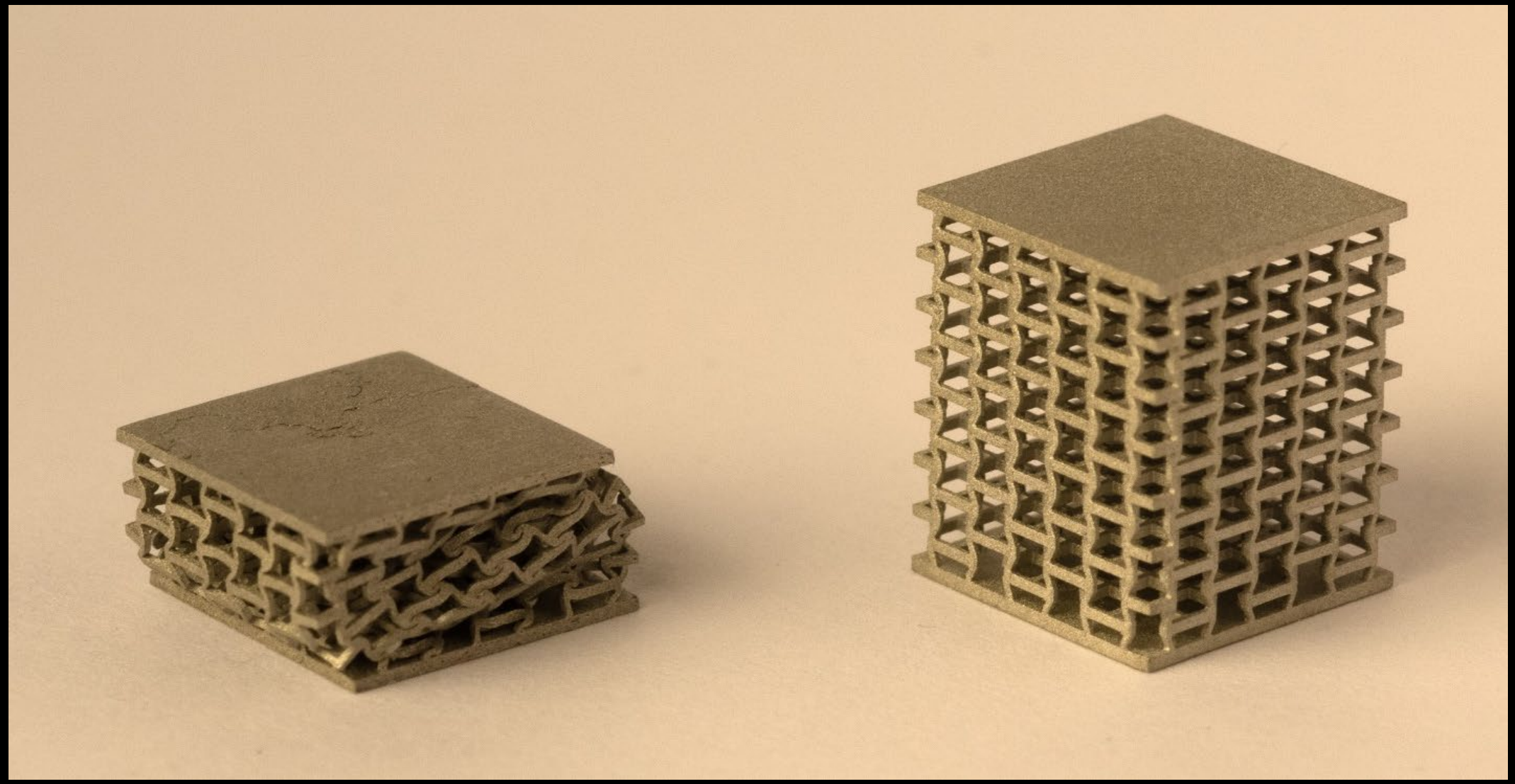

316L stainless steel samples after and before being crushed in a tensile tester.

Bio-Aerosol Drum for covid-19 Research

Made for the lab of Jordan Peccia, Fall 2020

- This was the first project I ever designed and made in metal. I was the sole mechanical designer, and I worked with the university's professional machinist.
- The drum rotates slowly (~1.5 rpm), disturbing the air just enough to keep certain particle sizes floating, because covid lives differently in the air and on surfaces.
- Budget: $20k
- Engineering drawings: 65 sheets
- Timeline: 4 months, part time
- Provided usable data, lead to publication: "Development and Application of a Polydimethylsiloxane-Based Passive Air Sampler to Assess Personal Exposure to SARS-CoV-2," Environmental Science & Technology Letters. Jan 11, 2022. https://doi.org/10.1021/acs.estlett.1c00877:

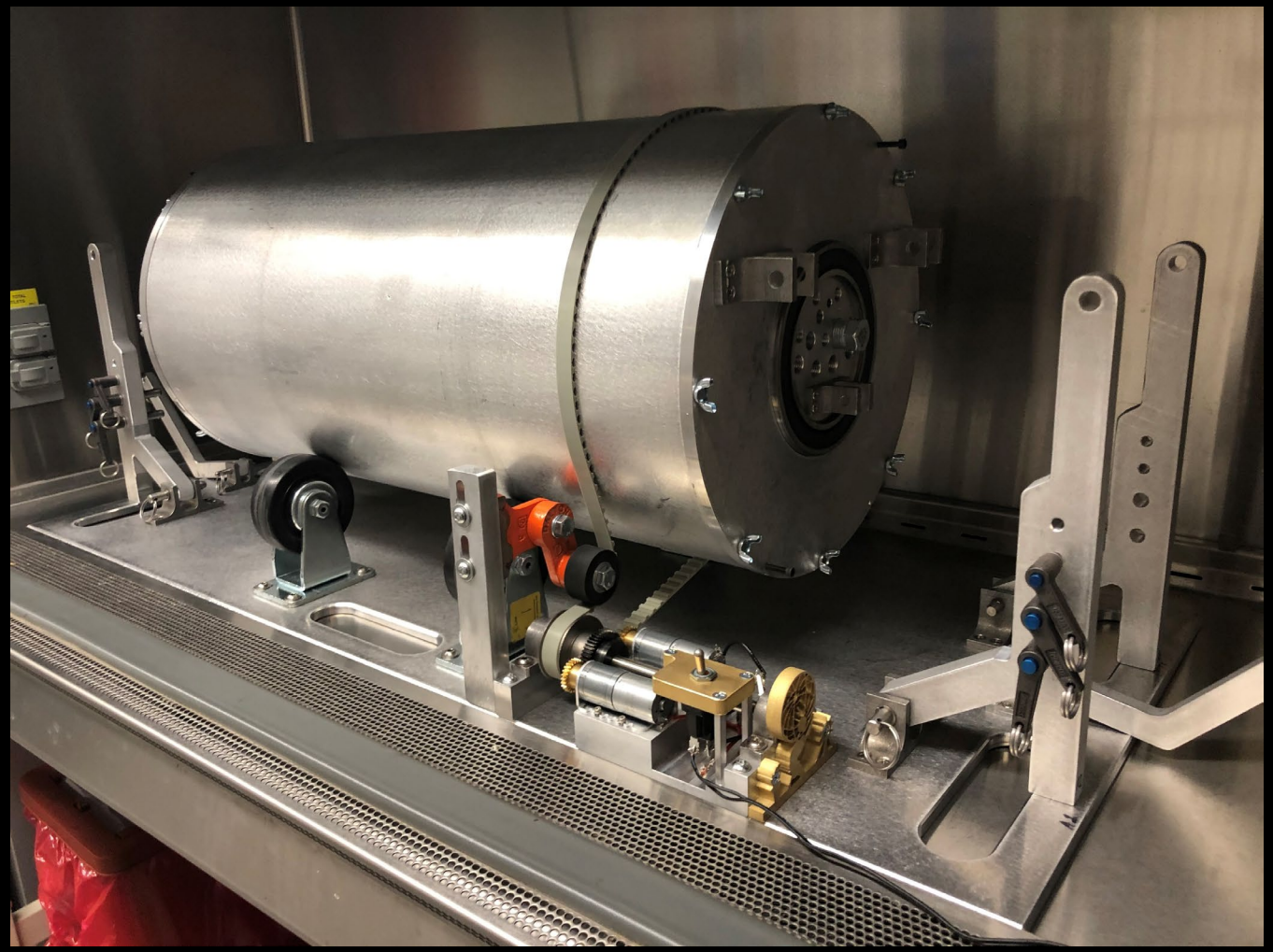

ITEM NO.	PART NUMBER	DESCRIPTION	QTY.
1	N/A	POWER TRAIN MOUNTING BLOCK	1
2	N/A	BEARING MOUNTING BLOCK	1
3	N/A	ASSEMBLED SMALL GEAR	2
4	N/A	GEAR SHAFT ASSEMBLY	1
5	MCMASTER: 2820T5	MOUNTED BEARING FOR 3/8"∅ SHAFT	2
6	MCMASTER: 2820T35	MOUNTED SLEEVE BEARING W/ TWO-BOLT FLANGE, FOR 3/8"∅ SHAFT	1
7	MCMASTER: 91306A280	BUTTON HEAD HEX DRIVE SCREWS ZINC-PLATED ALLOY STEEL, 1/4"-20, 1-1/4" L	8
8	POLOLU: 3233	METAL GEARMOTOR 25DX56L. NOTE: OTHER MOTORS FROM THIS SERIES FIT IN MOUNTING BLOCK	2
9	MCMASTER: 90909A527	316 SS FLANGED BUTTON HEAD SCREW 1/4"-20, 1/2" L	4
10	MCMASTER: 93505A003	M-F THREADED HEX STANDOFF, 1/4" HEX, 1-3/4" L, 8-32	2
11	MCMASTER: 93505A457	M-F THREADED HEX STANDOFF, 1/4" HEX, 1-1/4" L, 8-32	1
12	N/A	BUTTON MOUNTING PLATE	1
13	N/A	ATLAS	1
14	MCMASTER: 90273A196	STEEL SCREW, 8-32, 5/8" LONG	5
15	MCMASTER: 8002K13	TOGGLE SWITCH 2 POSITION, ROUNDED,	1

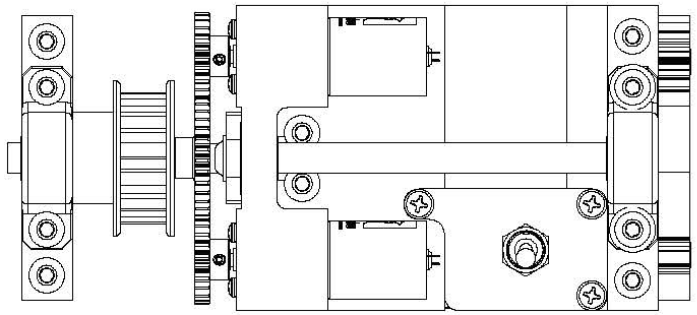

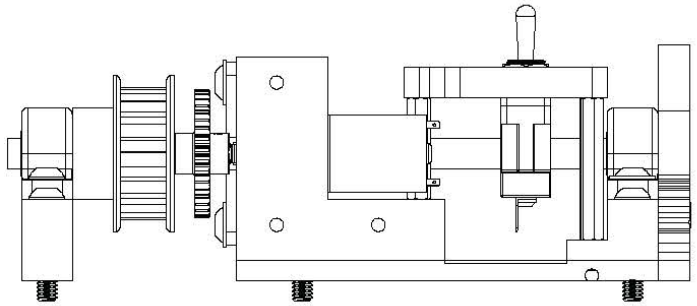

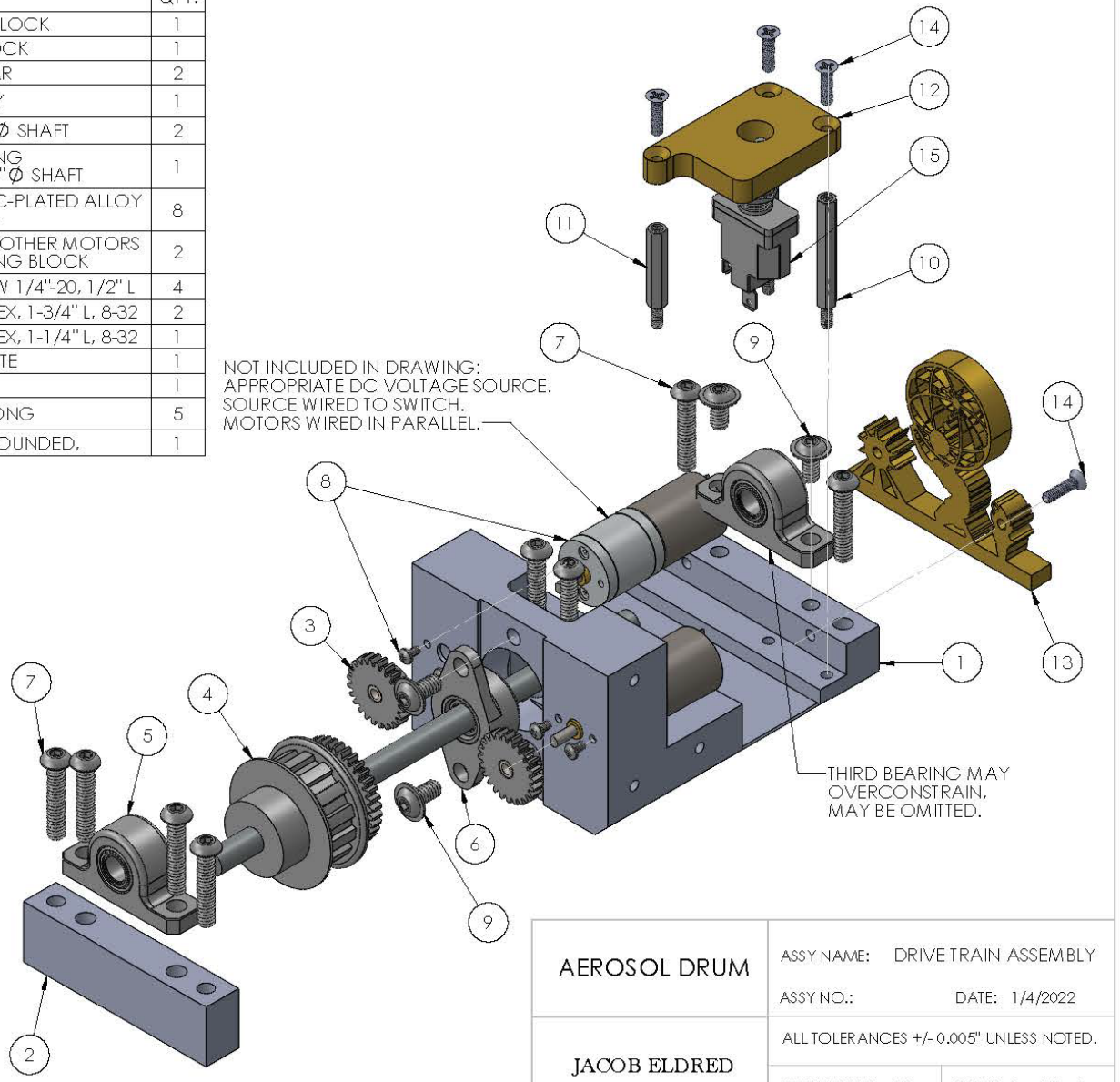

AEROSOL DRUM	ASSY NAME: DRIVE TRAIN ASSEMBLY	
	ASSY NO.:	DATE: 1/4/2022
JACOB ELDRED	ALL TOLERANCES +/- 0.005" UNLESS NOTED.	
	SHEET SCALE 2:3	SHEET 1 OF 1

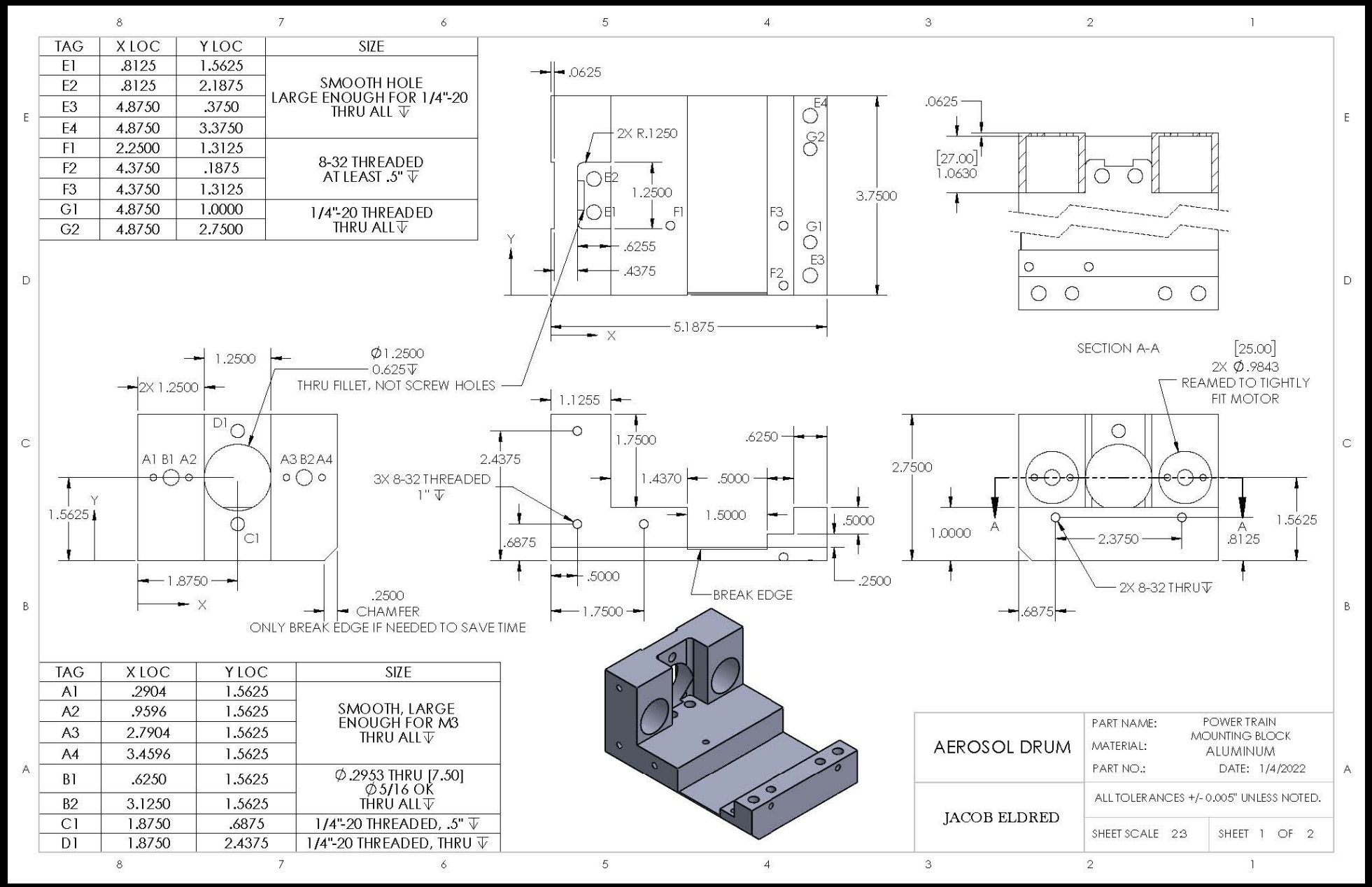

There are certain choices in this project that I would make differently today,
but I am proud of the quality of work for my first ever project in metal.

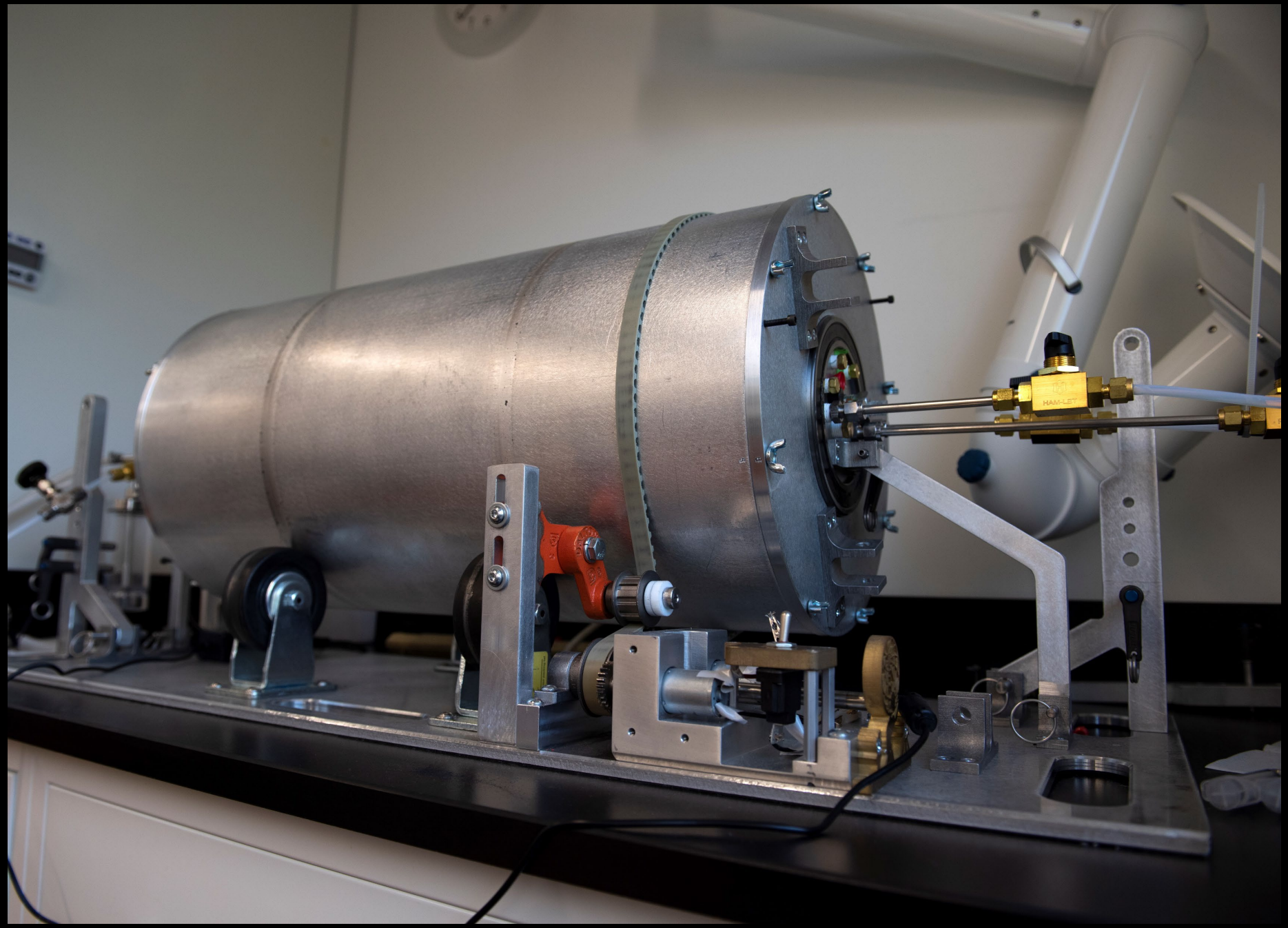
HAMILTON

Brass Trident

Permanently Installed Grace Hopper Dining Hall, Yale, 2021

CNC and manual machined from solid brass, hand polished.

Below: All CNC jigs manually machined.
Right: Museum-style mounting brackets. Made with all hidden fasteners.
Waterjet cut from aluminum and brass stock and then machined.

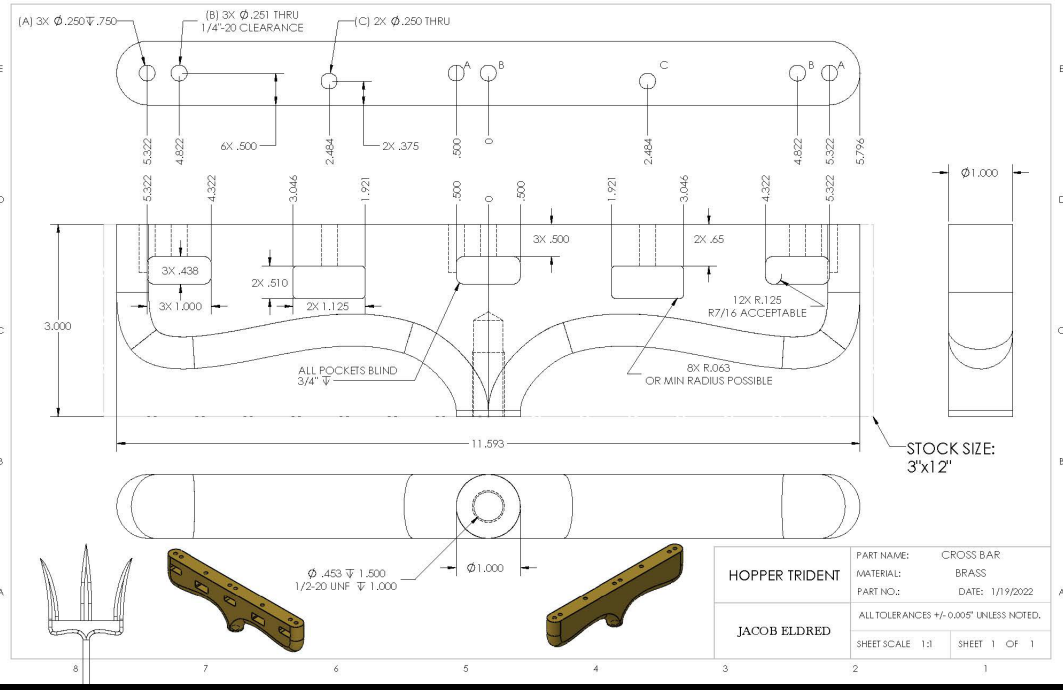
(A) 3X Ø.250 ↧ .750
(B) 3X Ø.251 THRU
1/4"-20 CLEARANCE
(C) 2X Ø.250 THRU
6X .500
2X .375
3X .500
2X .65
3X .438
2X .510
3X 1.000
2X 1.125
12X R.125
R7/16 ACCEPTABLE
ALL POCKETS BLIND
3/4" ↧
8X R.063
OR MIN RADIUS POSSIBLE
Ø1.000
3.000
11.593
STOCK SIZE:
3"x12"
Ø .453 ↧ 1.500
1/2-20 UNF ↧ 1.000
Ø1.000
HOPPER TRIDENT
PART NAME: CROSS BAR
MATERIAL: BRASS
PART NO.:
DATE: 1/19/2022
JACOB ELDRED
ALL TOLERANCES +/- 0.005" UNLESS NOTED.
SHEET SCALE 1:1
SHEET 1 OF 1

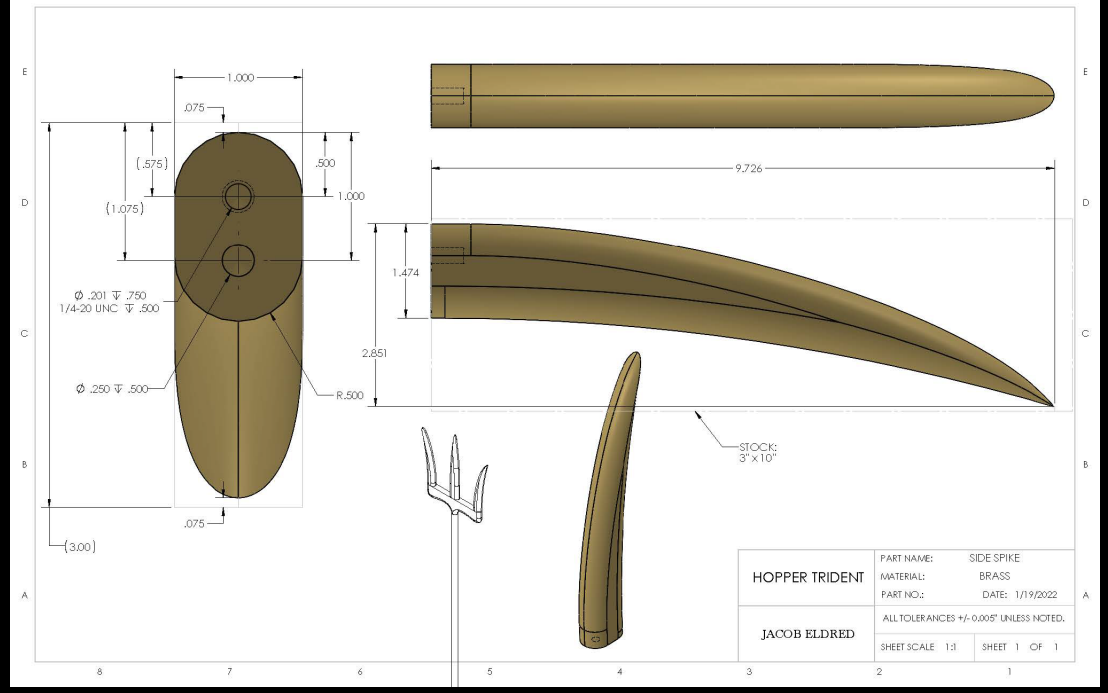
1.000
.075
(.575)
.500
1.000
(1.075)
Ø .201 ↧ .750
1/4-20 UNC ↧ .500
Ø .250 ↧ .500
R.500
.075
(3.00)
9.726
1.474
2.851
STOCK:
3" x 10"
HOPPER TRIDENT
PART NAME: SIDE SPIKE
MATERIAL: BRASS
PART NO.:
DATE: 1/19/2022
JACOB ELDRED
ALL TOLERANCES +/- 0.005" UNLESS NOTED.
SHEET SCALE 1:1
SHEET 1 OF 1

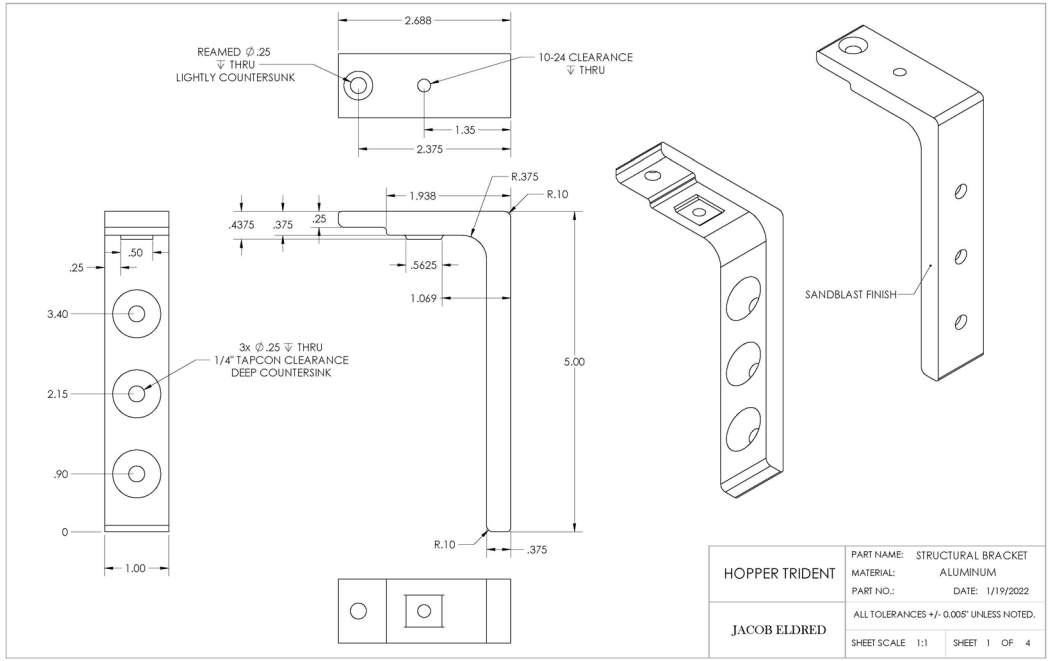
2.688
REAMED Ø .25
↧ THRU
LIGHTLY COUNTERSUNK
10-24 CLEARANCE
↧ THRU
1.35
2.375
R.375
1.938
R.10
.4375
.375
.25
.50
.25
.5625
1.069
3.40
3x Ø .25 ↧ THRU
1/4" TAPCON CLEARANCE
DEEP COUNTERSINK
5.00
2.15
.90
0
R.10
.375
1.00
SANDBLAST FINISH
HOPPER TRIDENT
PART NAME: STRUCTURAL BRACKET
MATERIAL: ALUMINUM
PART NO.:
DATE: 1/19/2022
JACOB ELDRED
ALL TOLERANCES +/- 0.005" UNLESS NOTED.
SHEET SCALE 1:1
SHEET 1 OF 4

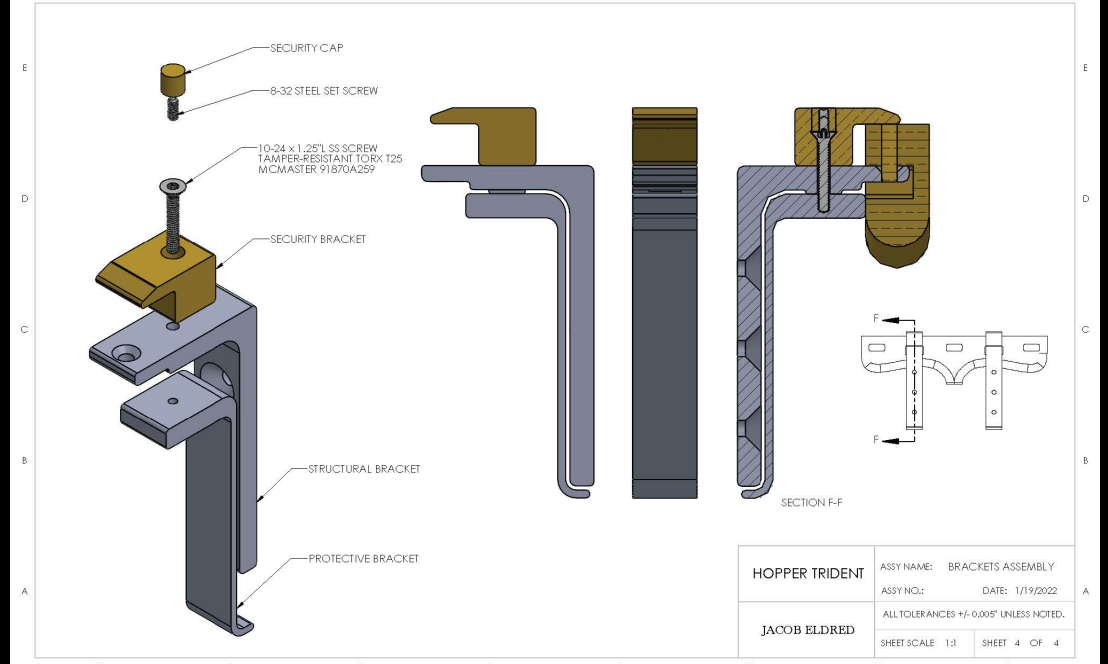
SECURITY CAP
8-32 STEEL SET SCREW
10-24 x 1.25"L SS SCREW
TAMPER-RESISTANT TORX T25
MCMASTER 91870A259
SECURITY BRACKET
STRUCTURAL BRACKET
PROTECTIVE BRACKET
F
F
SECTION F-F
HOPPER TRIDENT
ASSY NAME: BRACKETS ASSEMBLY
ASSY NO.:
DATE: 1/19/2022
JACOB ELDRED
ALL TOLERANCES +/- 0.005" UNLESS NOTED.
SHEET SCALE 1:1
SHEET 4 OF 4

Smaller Personal Projects

Furniture, Neon, and Photography, 2017-2019

A library bench made from stained alder and inlaid walnut, cherry, and maple. Originally for a summer furniture design studio at Rhode Island School of Design (RISD). 2018

Left to right: Two neon signs permanently installed at my high school, one made for a friend. All 2019.

This photograph won a Scholastic Art & Writing national silver medal and hung in the Metropolitan. 2017.