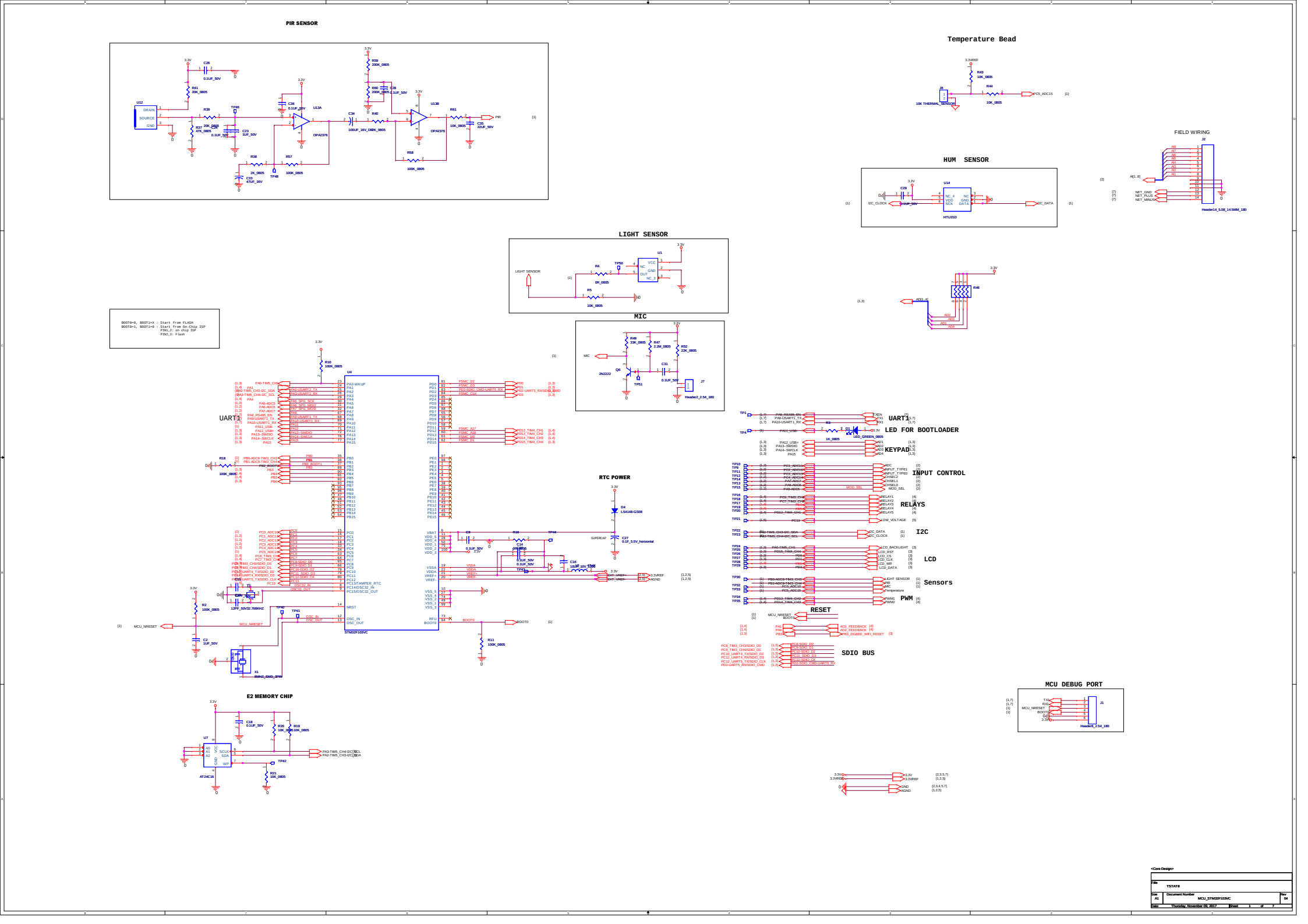
PIR SENSOR
Temperature Bead
HUM SENSOR
FIELD WIRING
LIGHT SENSOR
MIC
RTC POWER
UART1
LED FOR BOOTLOADER
KEYPAD
INPUT CONTROL
RELAYS
I2C
LCD
Sensors
PWM
RESET
SDIO BUS
MCU DEBUG PORT
E2 MEMORY CHIP
STM32F103VC
OPA2376
HTU21D
Header14_5.08_14.5MM_180
Header2_2.54_180
Header6_2.54_180
BOOT0=0, BOOT1=X : Start from FLASH
BOOT0=1, BOOT1=0 : Start from On-Chip ISP
PIN1,2: on chip ISP
PIN2,3: Flash
<Core Design>
Title
TSTAT8
Size
A1
Document Number
MCU_STM32F103VC
Rev
04
Date:
Thursday, November 09, 2017
Sheet
1
of
7

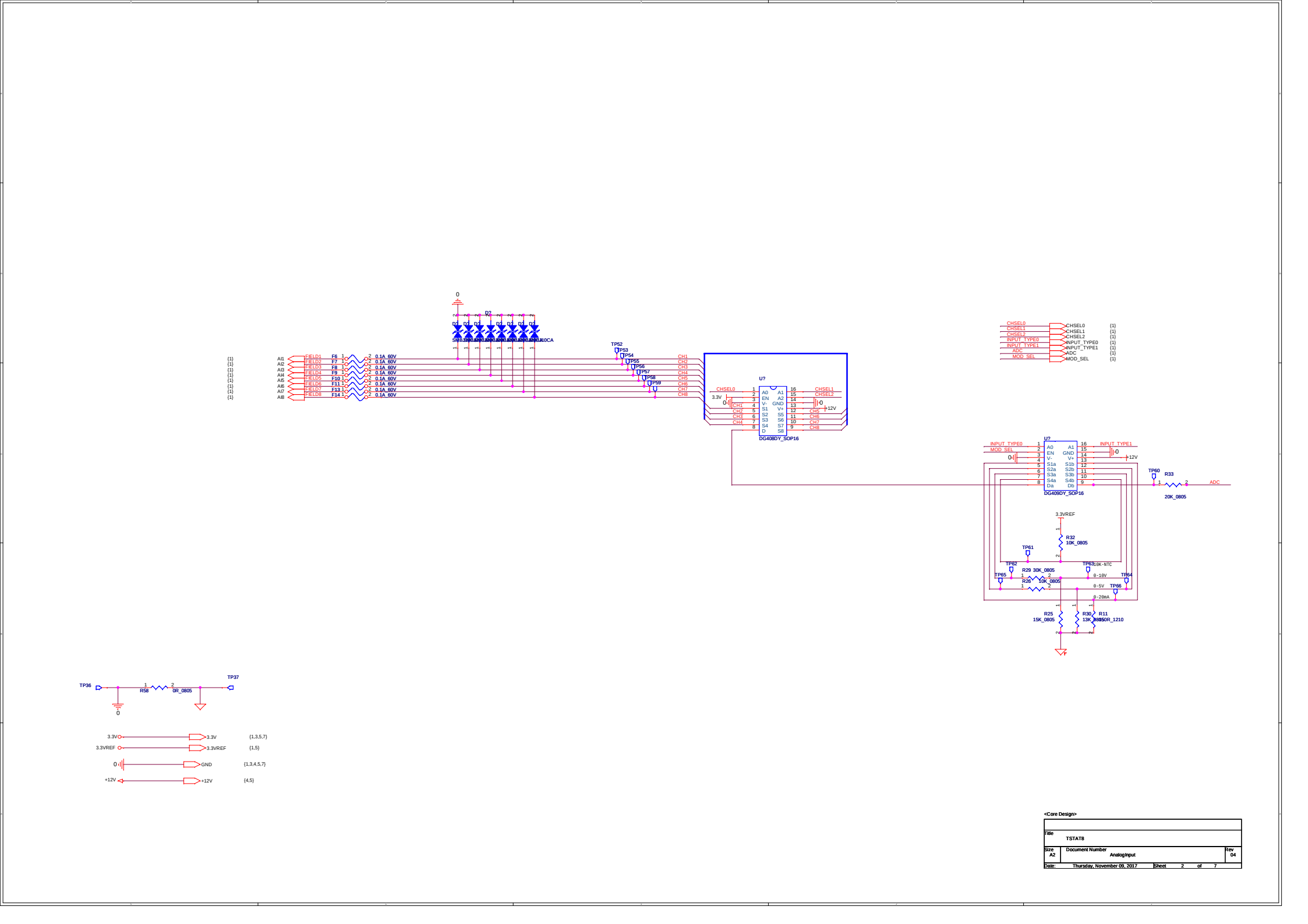

<Core Design>

Title	TSTAT8	
Size A2	Document Number AnalogInput	Rev 04
Date: Thursday, November 09, 2017	Sheet 2 of 7	

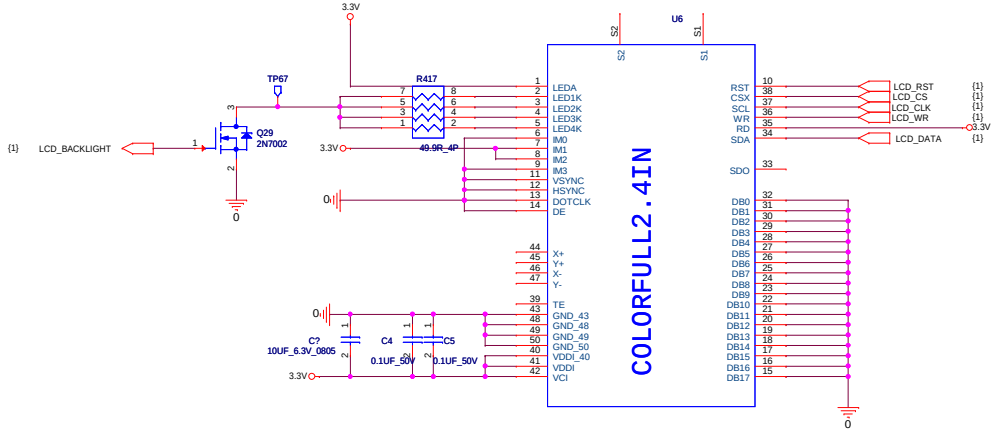

LCD

KEYPAD SOCKET

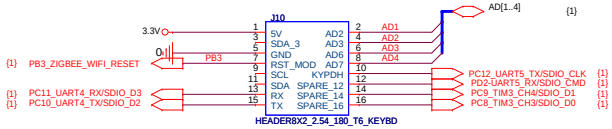

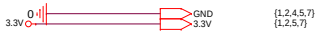

<Core Design>

Title	TSTAT8	
Size C	Document Number KaypadDisplay&Connector	Rev 04
Date: Thursday, November 09, 2017	Sheet 3 of 7	

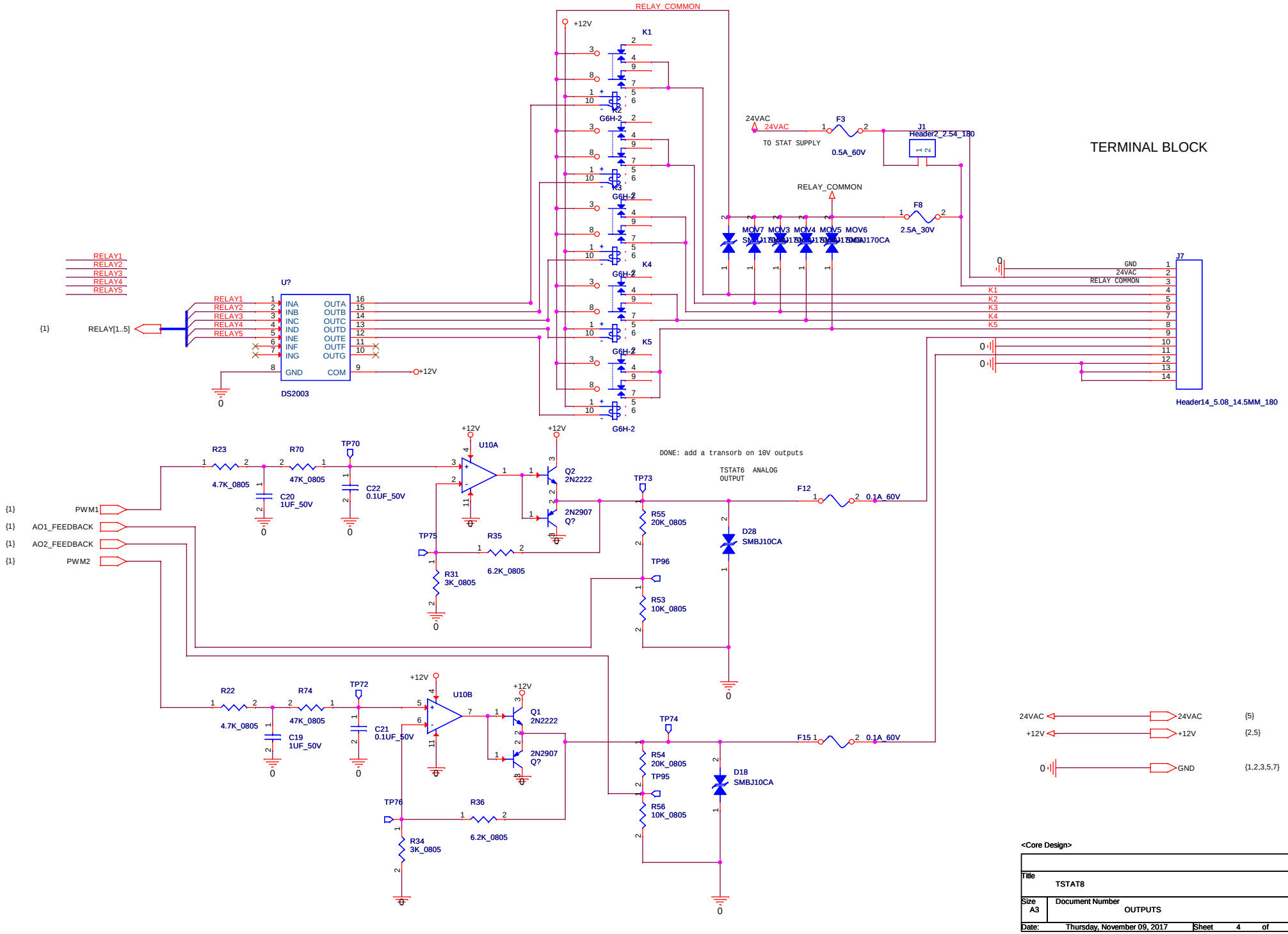
RELAY_COMMON
+12V
K1
K2
K3
K4
K5
G6H-2
24VAC
TO STAT SUPPLY
F3
0.5A_60V
J1
Header2_2.54_180
TERMINAL BLOCK
F8
2.5A_30V
MOV7 MOV3 MOV4 MOV5 MOV6
SMBJ170CA
RELAY1
RELAY2
RELAY3
RELAY4
RELAY5
{1}
RELAY[1..5]
U?
INA
INB
INC
IND
INE
INF
ING
GND
OUTA
OUTB
OUTC
OUTD
OUTE
OUTF
OUTG
COM
DS2003
GND
24VAC
RELAY_COMMON
J7
Header14_5.08_14.5MM_180
DONE: add a transorb on 10V outputs
TSTAT6 ANALOG OUTPUT
R23
4.7K_0805
R70
47K_0805
TP70
C20
1UF_50V
C22
0.1UF_50V
U10A
Q2
2N2222
2N2907
Q?
TP73
F12
0.1A_60V
R55
20K_0805
D28
SMBJ10CA
TP96
R53
10K_0805
TP75
R35
6.2K_0805
R31
3K_0805
PWM1
AO1_FEEDBACK
AO2_FEEDBACK
PWM2
R22
4.7K_0805
R74
47K_0805
TP72
C19
1UF_50V
C21
0.1UF_50V
U10B
Q1
2N2222
2N2907
Q?
TP74
F15
0.1A_60V
R54
20K_0805
D18
SMBJ10CA
TP95
R56
10K_0805
TP76
R36
6.2K_0805
R34
3K_0805
24VAC
+12V
GND
{5}
{2,5}
{1,2,3,5,7}
<Core Design>
Title
TSTAT8
Size
A3
Document Number
OUTPUTS
Rev
04
Date:
Thursday, November 09, 2017
Sheet
4
of
7

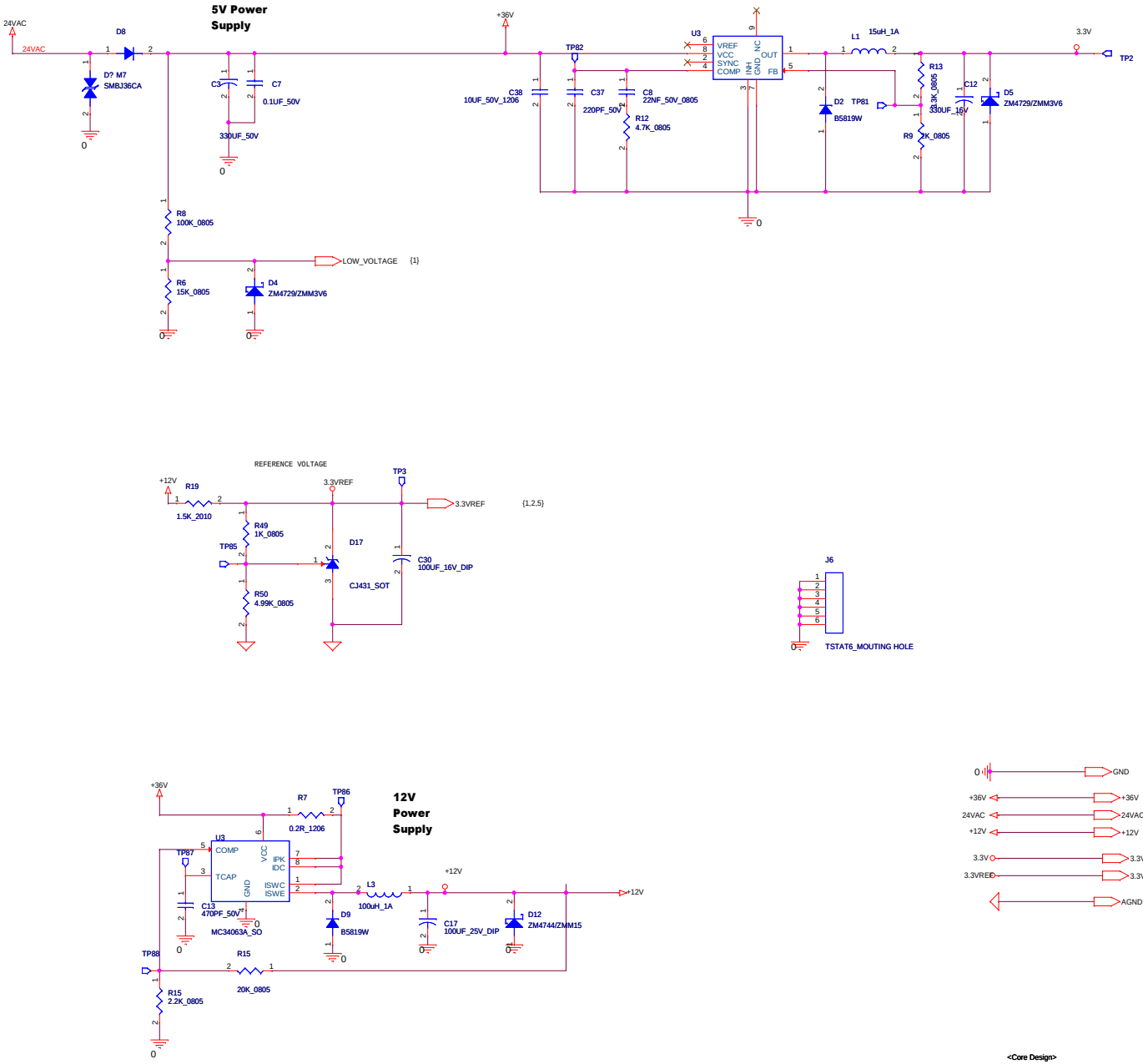

<Core Design>

Title	TSTAT8	
Size C	Document Number Power	Rev 04
Date: Thursday, November 09, 2017	Sheet 5 of 8	

REV 0

DONE: Remove the PIC chip

DONE: Change the main chip use ARM7(CORTEX)

DONE: add filter in front of the PWM AMP

DONE: add the driver chip(ULN2003) in front of relays

DONE: change the REF from 5V to 3V

REV 1

TBD: change the programmer header serial prot with UART1
TBD: backlight control transistor need to connect to main cpu
TBD: LCD connecter need to be reversed
TBD:C3 too big
TBD: change HUMSensor module to onboard .
TBD: PIR move to middle

REV 2

Done: connect 3.3VREFto pin 21 and GND to pin20
DONE: Fix LCD footprint , no copprer .
DONE: add LCD holder footprint .
DONE: change AT24C02 to AT24C16
DONE: change AT24C16 and STM32F103VE power supply VDD33A to 3.3V .
DONE: Output change to push-pull circuit .
DONE: htu21d VDD pin is not connected
DONE: change R38&R40 to 6.2K .
DONE: change C21&C22 to 1UF .
DONE: change C23&C24 to 0.1UF .
Done: 8MHZ crystal change to small footprint .
DONE: Move LCD holder ,LCD connector , PIR sensor .
DONE: Update the PIR sensor circuit .
DONE: Modify UP and DOWN key silkscreen .

REV3

Done: change to Tstat8 color display
Done: FOR ICT .
Done: fix keyboard main connector footprint .
Done: 3.3VREF change to 3VREF .
Done:Add feedback from AO .

REV4

TBD: make a new WIFI module (SDIO BUS)
Modify connector PIN define for WIFI module .

TBD: REALY 3 change from PC8 to PB4.
REALY 4 change from PC9 to PB5.
LCD_WR change from PD2 to PB6.

REV4.1

Done: 修改PIR SENSOR电路

REV4.2

Done: 修改PIR SENSOR电路

REV4.3

<Core Design>

Title: TSTAT8		
Size: B	Document Number: Revisions	Rev: 04
Date: Thursday, November 09, 2017	Sheet 6 of 7	

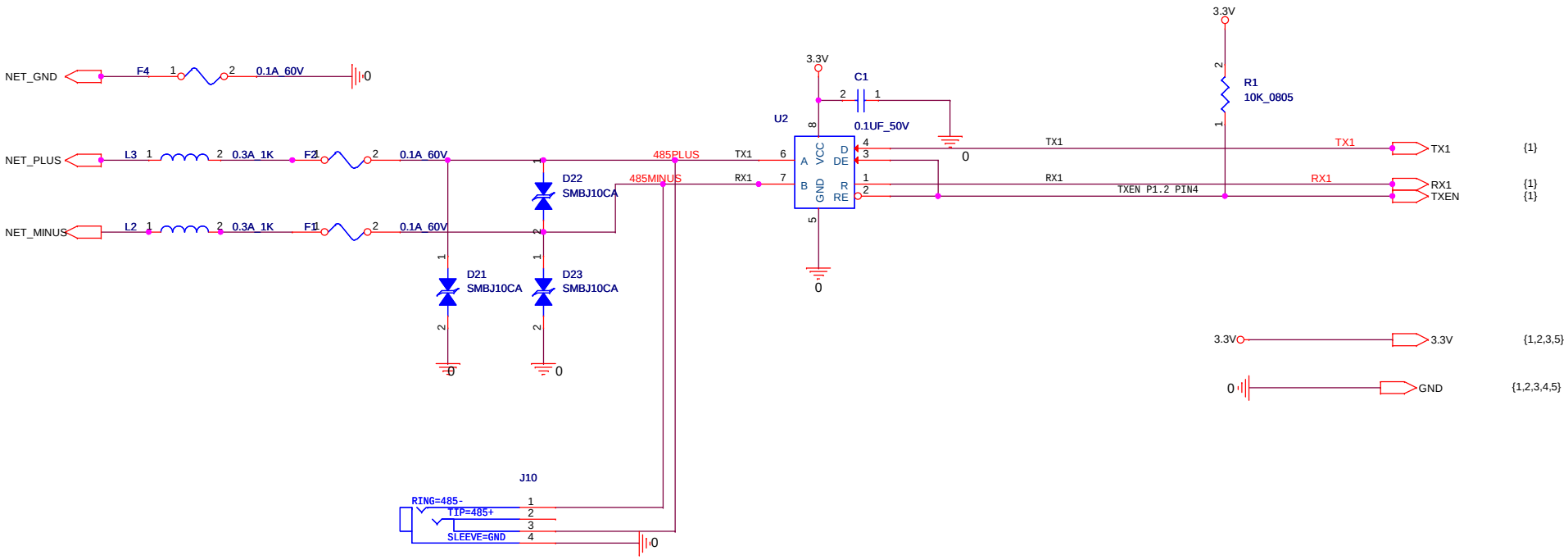

<Core Design>

Title: TSTAT8			
Size: B	Document Number: SERIALPORT		Rev: 04
Date: Thursday, November 09, 2017	Sheet 7 of 7		