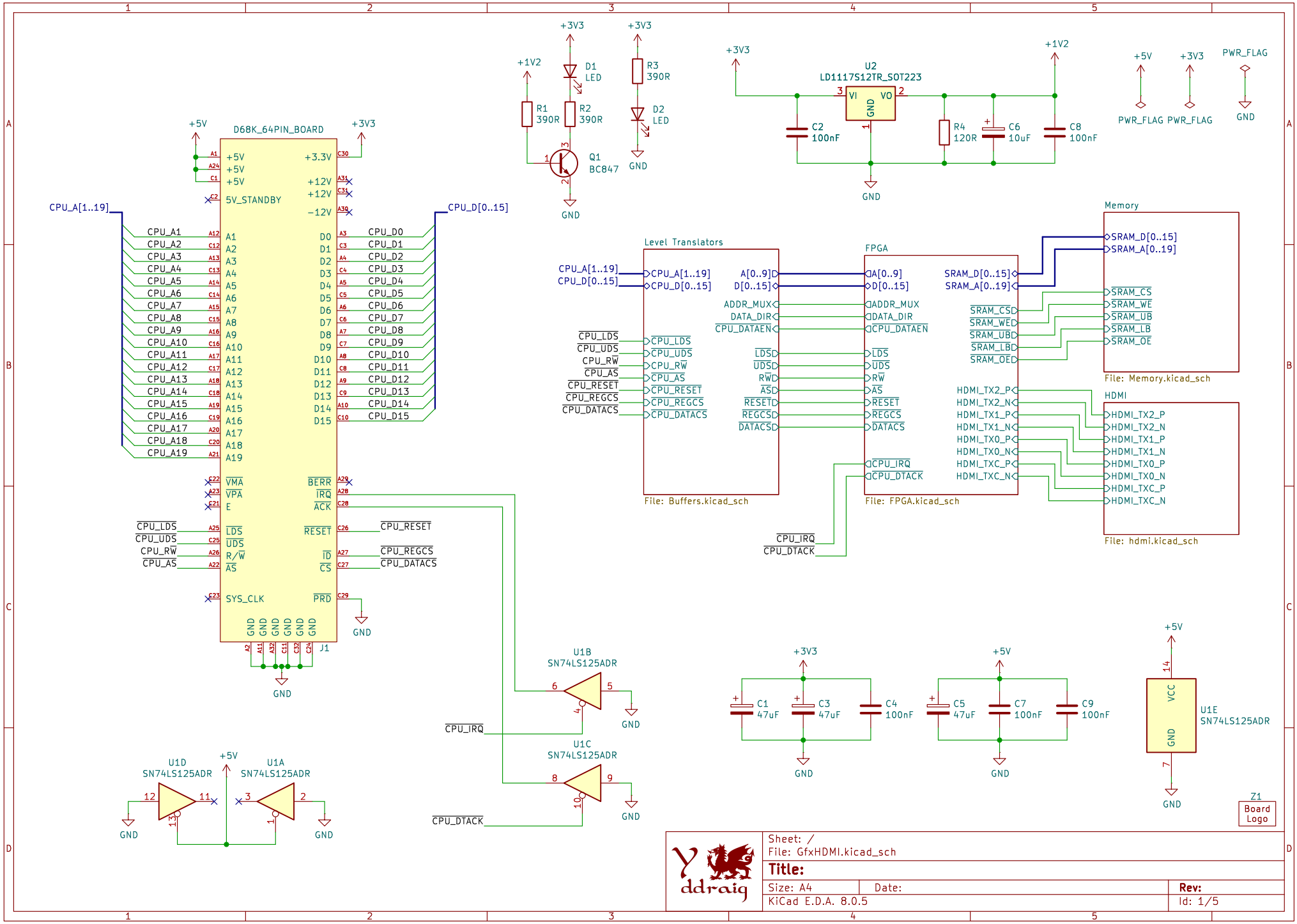

Sheet: /
File: GfxHDMI.kicad_sch

Title:

Size: A4 | Date: | **Rev:**

KiCad E.D.A. 8.0.5 | Id: 1/5

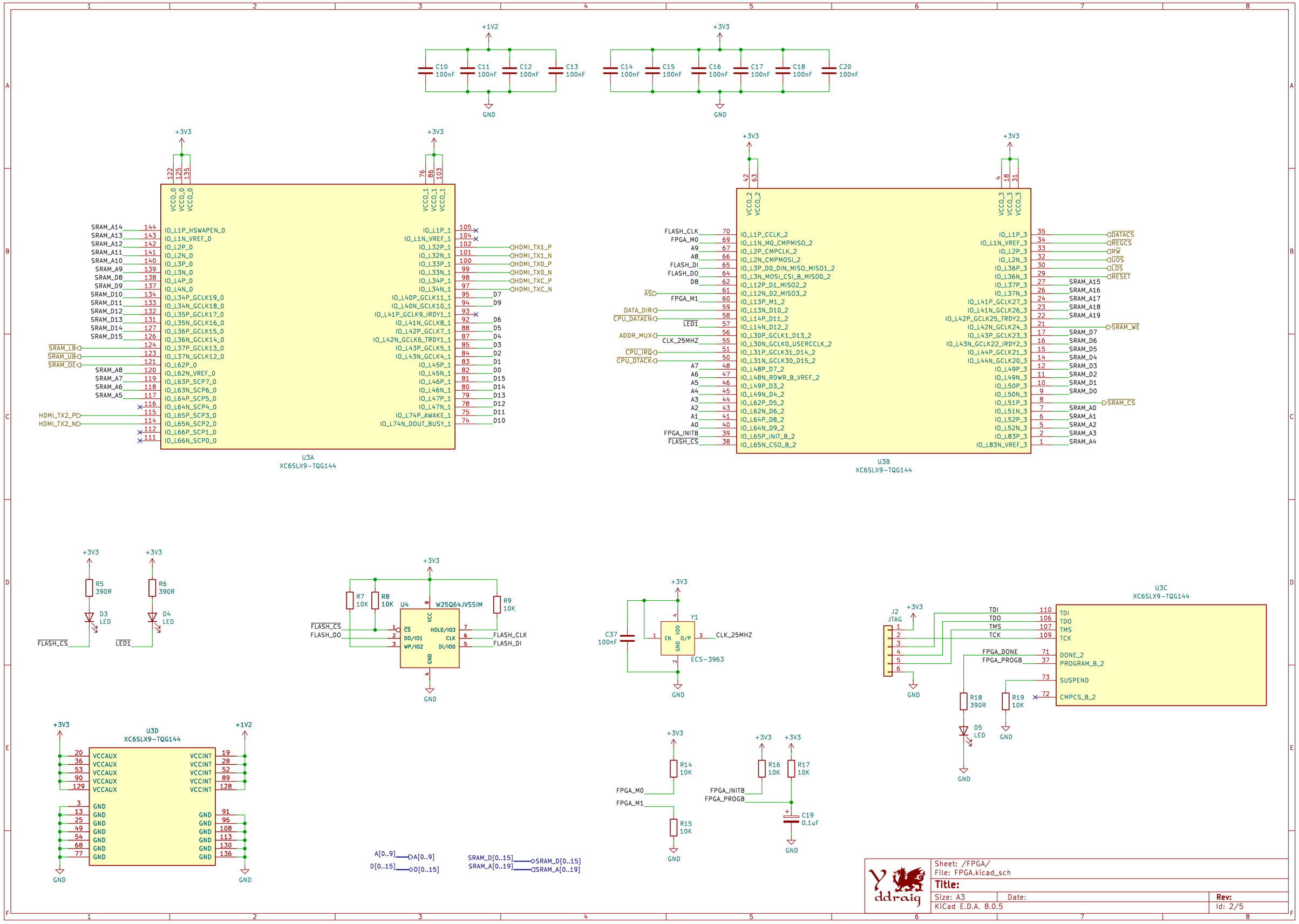
+1V2
C10 100nF
C11 100nF
C12 100nF
C13 100nF
GND
+3V3
C14 100nF
C15 100nF
C16 100nF
C17 100nF
C18 100nF
C20 100nF
GND
U3A
XC6SLX9-TQG144
VCCO_0 122 125 135
VCCO_1 76 86 103
SRAM_A14 144 IO_L1P_HSWAPEN_0
SRAM_A13 143 IO_L1N_VREF_0
SRAM_A12 142 IO_L2P_0
SRAM_A11 141 IO_L2N_0
SRAM_A10 140 IO_L3P_0
SRAM_A9 139 IO_L3N_0
SRAM_D8 138 IO_L4P_0
SRAM_D9 137 IO_L4N_0
SRAM_D10 134 IO_L34P_GCLK19_0
SRAM_D11 133 IO_L34N_GCLK18_0
SRAM_D12 132 IO_L35P_GCLK17_0
SRAM_D13 131 IO_L35N_GCLK16_0
SRAM_D14 127 IO_L36P_GCLK15_0
SRAM_D15 126 IO_L36N_GCLK14_0
SRAM_LB 124 IO_L37P_GCLK13_0
SRAM_UB 123 IO_L37N_GCLK12_0
SRAM_OE 121 IO_L62P_0
SRAM_A8 120 IO_L62N_VREF_0
SRAM_A7 119 IO_L63P_SCP7_0
SRAM_A6 118 IO_L63N_SCP6_0
SRAM_A5 117 IO_L64P_SCP5_0
116 IO_L64N_SCP4_0
HDMI_TX2_P 115 IO_L65P_SCP3_0
HDMI_TX2_N 114 IO_L65N_SCP2_0
112 IO_L66P_SCP1_0
111 IO_L66N_SCP0_0
IO_L1P_1 105
IO_L1N_VREF_1 104
IO_L32P_1 102 HDMI_TX1_P
IO_L32N_1 101 HDMI_TX1_N
IO_L33P_1 100 HDMI_TX0_P
IO_L33N_1 99 HDMI_TX0_N
IO_L34P_1 98 HDMI_TXC_P
IO_L34N_1 97 HDMI_TXC_N
IO_L40P_GCLK11_1 95 D7
IO_L40N_GCLK10_1 94 D9
IO_L41P_GCLK9_IRDY1_1 93
IO_L41N_GCLK8_1 92 D6
IO_L42P_GCLK7_1 88 D5
IO_L42N_GCLK6_TRDY1_1 87 D4
IO_L43P_GCLK5_1 85 D3
IO_L43N_GCLK4_1 84 D2
IO_L45P_1 83 D1
IO_L45N_1 82 D0
IO_L46P_1 81 D15
IO_L46N_1 80 D14
IO_L47P_1 79 D13
IO_L47N_1 78 D12
IO_L74P_AWAKE_1 75 D11
IO_L74N_DOUT_BUSY_1 74 D10
U3B
XC6SLX9-TQG144
VCCO_2 42 63
VCCO_3 4 18 31
FLASH_CLK 70 IO_L1P_CCLK_2
FPGA_M0 69 IO_L1N_M0_CMPMISO_2
A9 67 IO_L2P_CMPCLK_2
A8 66 IO_L2N_CMPMOSI_2
FLASH_DI 65 IO_L3P_D0_DIN_MISO_MISO1_2
FLASH_DO 64 IO_L3N_MOSI_CSI_B_MISO0_2
D8 62 IO_L12P_D1_MISO2_2
61 IO_L12N_D2_MISO3_2
AS 60 FPGA_M1 IO_L13P_M1_2
59 IO_L13N_D10_2
DATA_DIR 58 IO_L14P_D11_2
CPU_DATAEN 57 LED1 IO_L14N_D12_2
56 IO_L30P_GCLK1_D13_2
ADDR_MUX 55 CLK_25MHZ IO_L30N_GCLK0_USERCCLK_2
51 IO_L31P_GCLK31_D14_2
CPU_IRQ 50 IO_L31N_GCLK30_D15_2
CPU_DTACK 48 A7 IO_L48P_D7_2
47 A6 IO_L48N_RDWR_B_VREF_2
46 A5 IO_L49P_D3_2
45 A4 IO_L49N_D4_2
44 A3 IO_L62P_D5_2
43 A2 IO_L62N_D6_2
41 A1 IO_L64P_D8_2
40 A0 IO_L64N_D9_2
39 FPGA_INITB IO_L65P_INIT_B_2
38 FLASH_CS IO_L65N_CSO_B_2
35 IO_L1P_3 DATACS
34 IO_L1N_VREF_3 REGCS
33 IO_L2P_3 RW
32 IO_L2N_3 UDS
30 IO_L36P_3 LDS
29 IO_L36N_3 RESET
27 IO_L37P_3 SRAM_A15
26 IO_L37N_3 SRAM_A16
24 IO_L41P_GCLK27_3 SRAM_A17
23 IO_L41N_GCLK26_3 SRAM_A18
22 IO_L42P_GCLK25_TRDY2_3 SRAM_A19
21 IO_L42N_GCLK24_3 SRAM_WE
17 IO_L43P_GCLK23_3 SRAM_D7
16 IO_L43N_GCLK22_IRDY2_3 SRAM_D6
15 IO_L44P_GCLK21_3 SRAM_D5
14 IO_L44N_GCLK20_3 SRAM_D4
12 IO_L49P_3 SRAM_D3
11 IO_L49N_3 SRAM_D2
10 IO_L50P_3 SRAM_D1
9 IO_L50N_3 SRAM_D0
8 IO_L51P_3 SRAM_CS
7 IO_L51N_3 SRAM_A0
6 IO_L52P_3 SRAM_A1
5 IO_L52N_3 SRAM_A2
2 IO_L83P_3 SRAM_A3
1 IO_L83N_VREF_3 SRAM_A4
R5 390R
D3 LED
FLASH_CS
R6 390R
D4 LED
LED1
U4
W25Q64JVSSIM
R7 10K
R8 10K
R9 10K
CS
DO/IO1
WP/IO2
GND
VCC
HOLD/IO3
CLK
DI/IO0
FLASH_CS
FLASH_DO
FLASH_CLK
FLASH_DI
C37 100nF
Y1
EN
VDD
O/P
ECS-3963
CLK_25MHZ
J2
JTAG
TDI
TDO
TMS
TCK
FPGA_DONE
FPGA_PROGB
U3C
XC6SLX9-TQG144
TDI 110
TDO 106
TMS 107
TCK 109
DONE_2 71
PROGRAM_B_2 37
SUSPEND 73
CMPCS_B_2 72
R18 390R
R19 10K
D5 LED
U3D
XC6SLX9-TQG144
VCCAUX 20 36 53 90 129
VCCINT 19 28 52 89 128
GND 3 13 25 49 54 68 77
GND 91 96 108 113 130 136
R14 10K
FPGA_M0
FPGA_M1
R15 10K
R16 10K
R17 10K
FPGA_INITB
FPGA_PROGB
C19 0.1uF
A[0..9]
D[0..15]
SRAM_D[0..15]
SRAM_A[0..19]
Sheet: /FPGA/
File: FPGA.kicad_sch
Title:
Size: A3
Date:
Rev:
KiCad E.D.A. 8.0.5
Id: 2/5

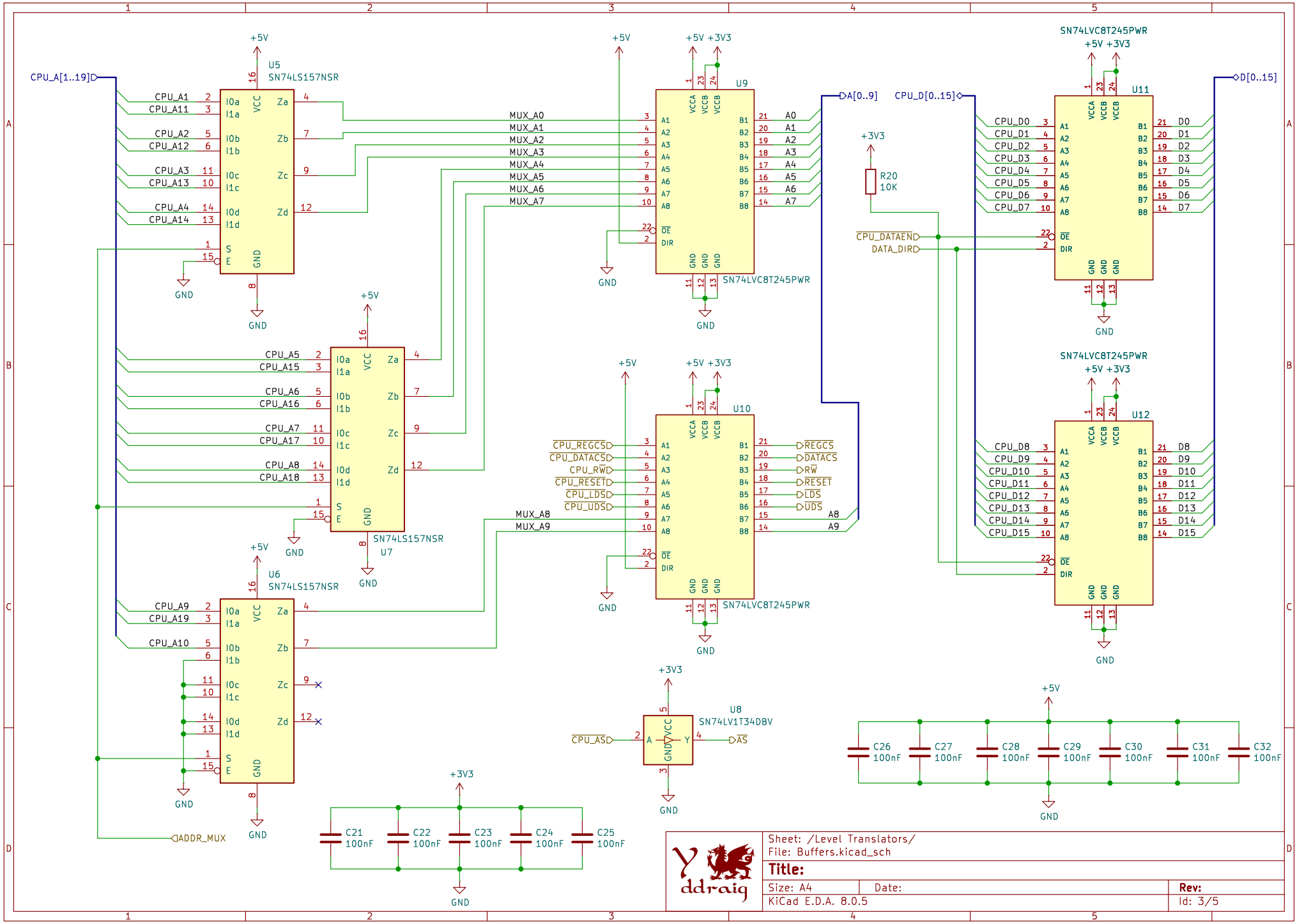
U5
SN74LS157NSR
U6
SN74LS157NSR
U7
SN74LS157NSR
U9
SN74LVC8T245PWR
U10
SN74LVC8T245PWR
U11
SN74LVC8T245PWR
U12
SN74LVC8T245PWR
U8
SN74LV1T34DBV
R20
10K
CPU_A[1..19]
CPU_D[0..15]
A[0..9]
D[0..15]
MUX_A0
MUX_A1
MUX_A2
MUX_A3
MUX_A4
MUX_A5
MUX_A6
MUX_A7
MUX_A8
MUX_A9
CPU_DATAEN
DATA_DIR
CPU_REGCS
CPU_DATACS
CPU_RW
CPU_RESET
CPU_LDS
CPU_UDS
CPU_AS
ADDR_MUX
+5V
+3V3
GND
C21 100nF
C22 100nF
C23 100nF
C24 100nF
C25 100nF
C26 100nF
C27 100nF
C28 100nF
C29 100nF
C30 100nF
C31 100nF
C32 100nF
Sheet: /Level Translators/
File: Buffers.kicad_sch
Title:
Size: A4
Date:
Rev:
KiCad E.D.A. 8.0.5
Id: 3/5

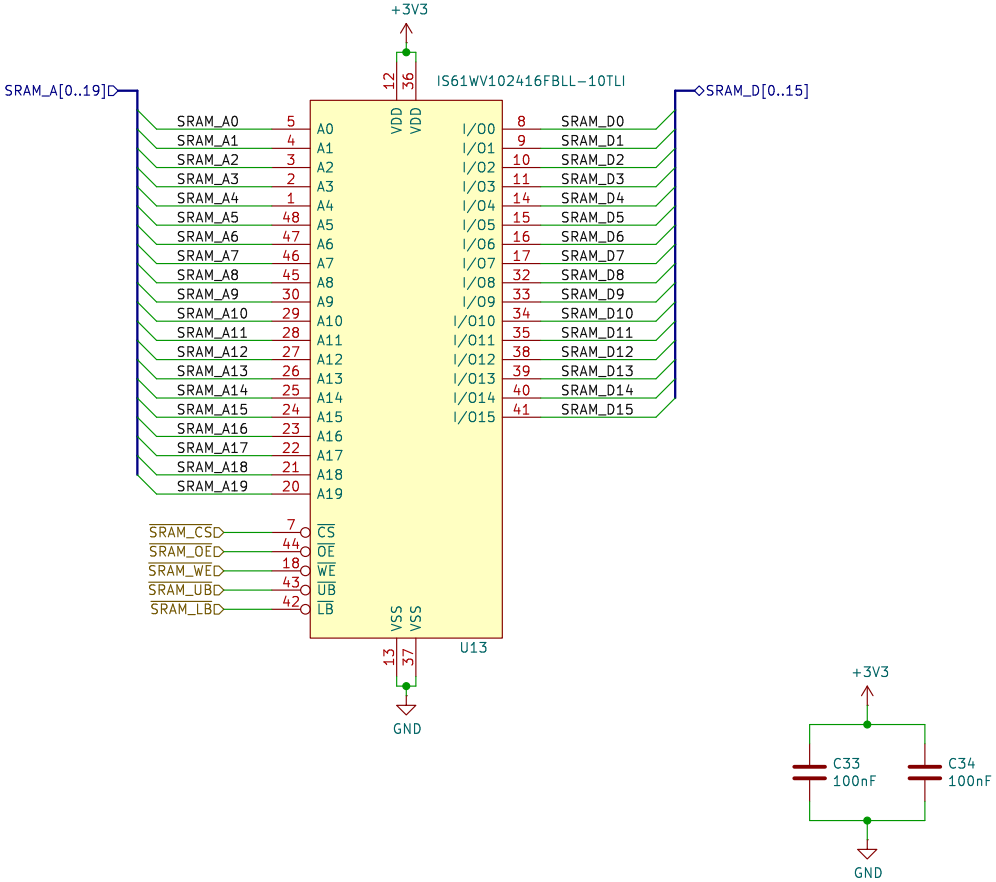

Sheet: /Memory/
File: Memory.kicad_sch

Title:

Size: A4	Date:	**Rev:**
KiCad E.D.A. 8.0.5		Id: 4/5

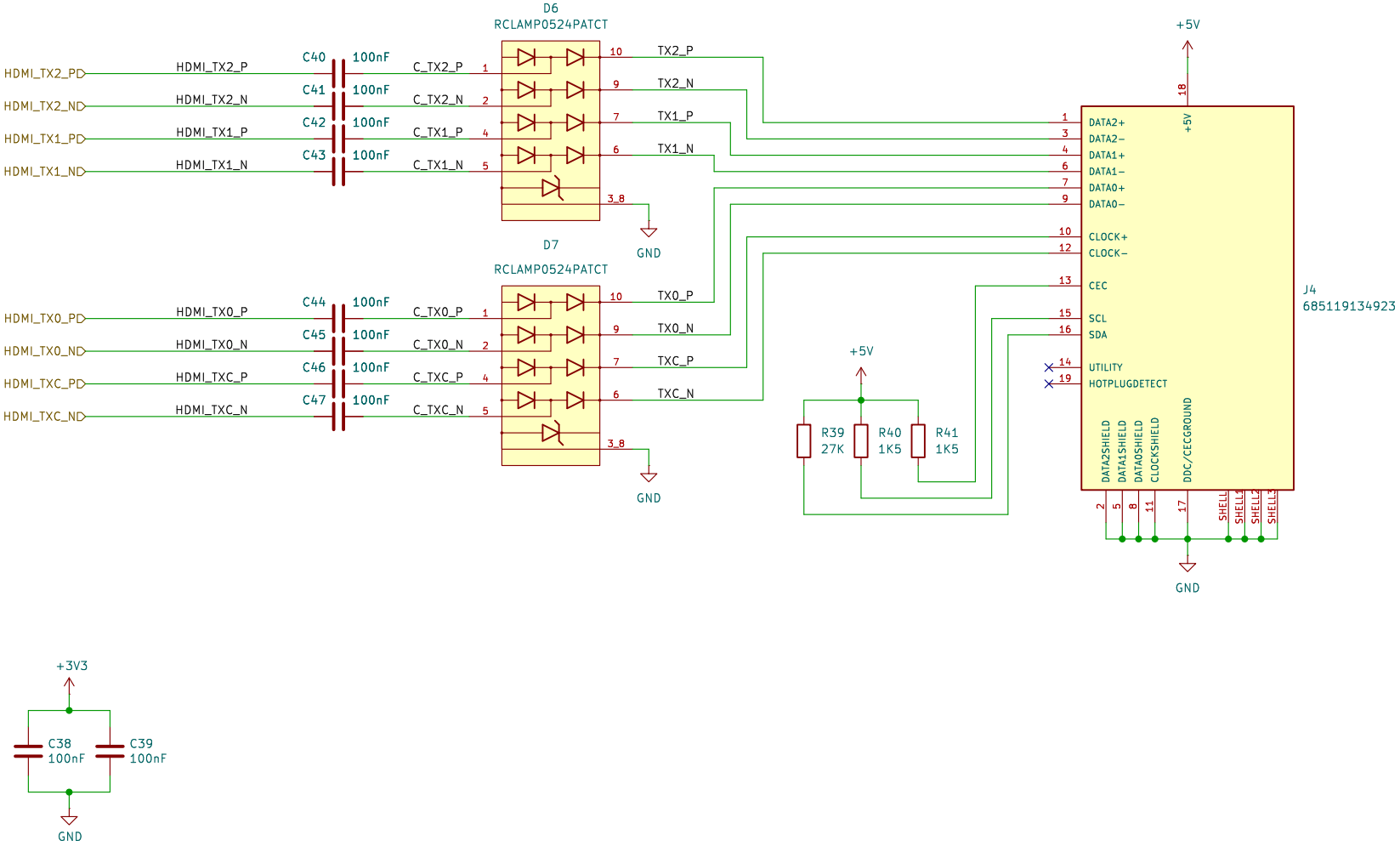

Sheet: /HDMI/
File: hdmi.kicad_sch

Title:

Size: A4	Date:	**Rev:**
KiCad E.D.A. 8.0.5		Id: 6/5