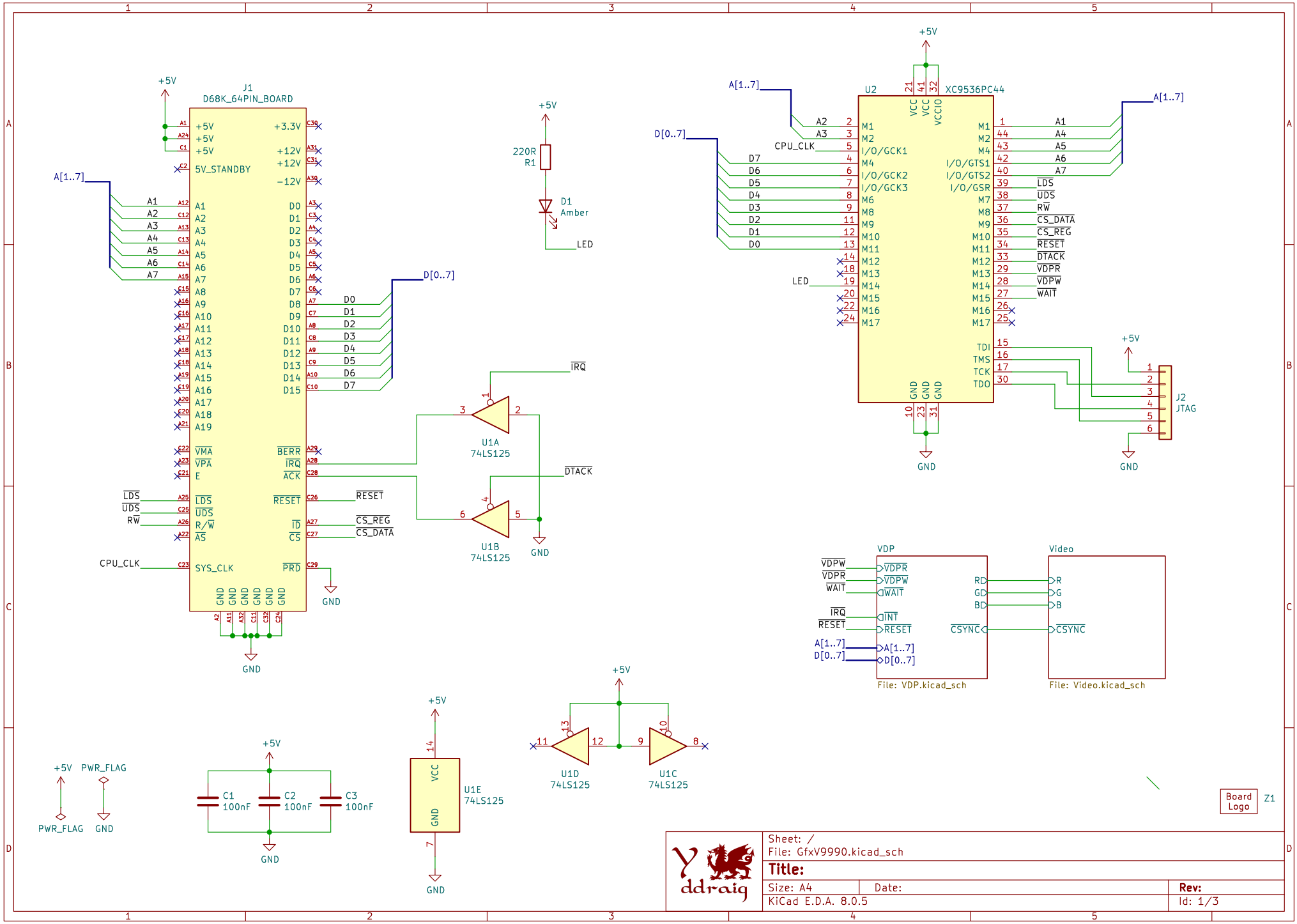
J1
D68K_64PIN_BOARD
+5V
+3.3V
+12V
-12V
5V_STANDBY
A[1..7]
D[0..7]
VMA
VPA
E
LDS
UDS
R/W
AS
SYS_CLK
BERR
IRQ
ACK
RESET
ID
CS
PRD
CPU_CLK
CS_REG
CS_DATA
GND
U1A
74LS125
U1B
74LS125
DTACK
220R
R1
D1
Amber
LED
U2
XC9536PC44
VCC
VCCIO
I/O/GCK1
I/O/GCK2
I/O/GCK3
I/O/GTS1
I/O/GTS2
I/O/GSR
TDI
TMS
TCK
TDO
J2
JTAG
VDP
Video
VDPR
VDPW
WAIT
INT
RD
GD
BD
CSYNC
R
G
B
File: VDP.kicad_sch
File: Video.kicad_sch
PWR_FLAG
C1
100nF
C2
100nF
C3
100nF
U1E
74LS125
U1D
74LS125
U1C
74LS125
Board
Logo
Z1
Sheet: /
File: GfxV9990.kicad_sch
Title:
Size: A4
Date:
Rev:
KiCad E.D.A. 8.0.5
Id: 1/3

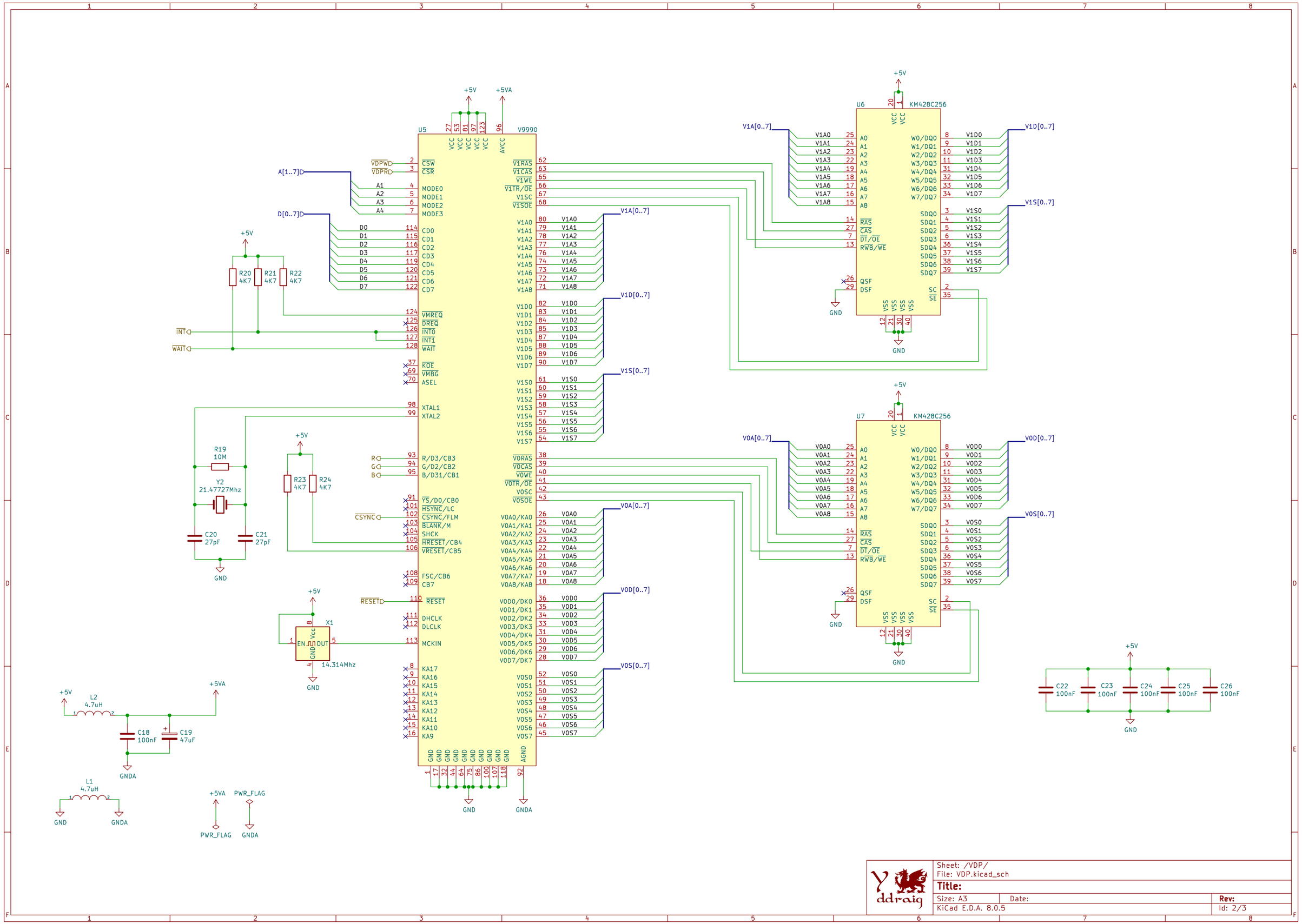
U5
V9990
U6
KM428C256
U7
KM428C256
+5V
+5VA
GND
GNDA
AVCC
VCC
VSS
VDPW
VDPR
A[1..7]
D[0..7]
INT
WAIT
CSW
CSR
MODE0
MODE1
MODE2
MODE3
CD0
CD1
CD2
CD3
CD4
CD5
CD6
CD7
VMREQ
DREQ
INT0
INT1
WAIT
KOE
VMBG
ASEL
XTAL1
XTAL2
R/D3/CB3
G/D2/CB2
B/D31/CB1
YS/D0/CB0
HSYNC/LC
CSYNC/FLM
BLANK/M
SHCK
HRESET/CB4
VRESET/CB5
FSC/CB6
CB7
RESET
DHCLK
DLCLK
MCKIN
KA17
KA16
KA15
KA14
KA13
KA12
KA11
KA10
KA9
V1RAS
V1CAS
V1WE
V1TR/OE
V1SC
V1SOE
V1A[0..7]
V1D[0..7]
V1S[0..7]
VORAS
VOCAS
VOWE
VOTR/OE
VOSC
VOSOE
VOA[0..7]
VOD[0..7]
VOS[0..7]
CSYNC
RESET
R
G
B
R20
4K7
R21
4K7
R22
4K7
R19
10M
Y2
21.47727Mhz
C20
27pF
C21
27pF
R23
4K7
R24
4K7
X1
14.314Mhz
L2
4.7uH
C18
100nF
C19
47uF
L1
4.7uH
PWR_FLAG
C22
100nF
C23
100nF
C24
100nF
C25
100nF
C26
100nF
RAS
CAS
DT/OE
RWB/WE
QSF
DSF
SC
SE
Sheet: /VDP/
File: VDP.kicad_sch
Title:
Size: A3
Date:
Rev:
KiCad E.D.A. 8.0.5
Id: 2/3

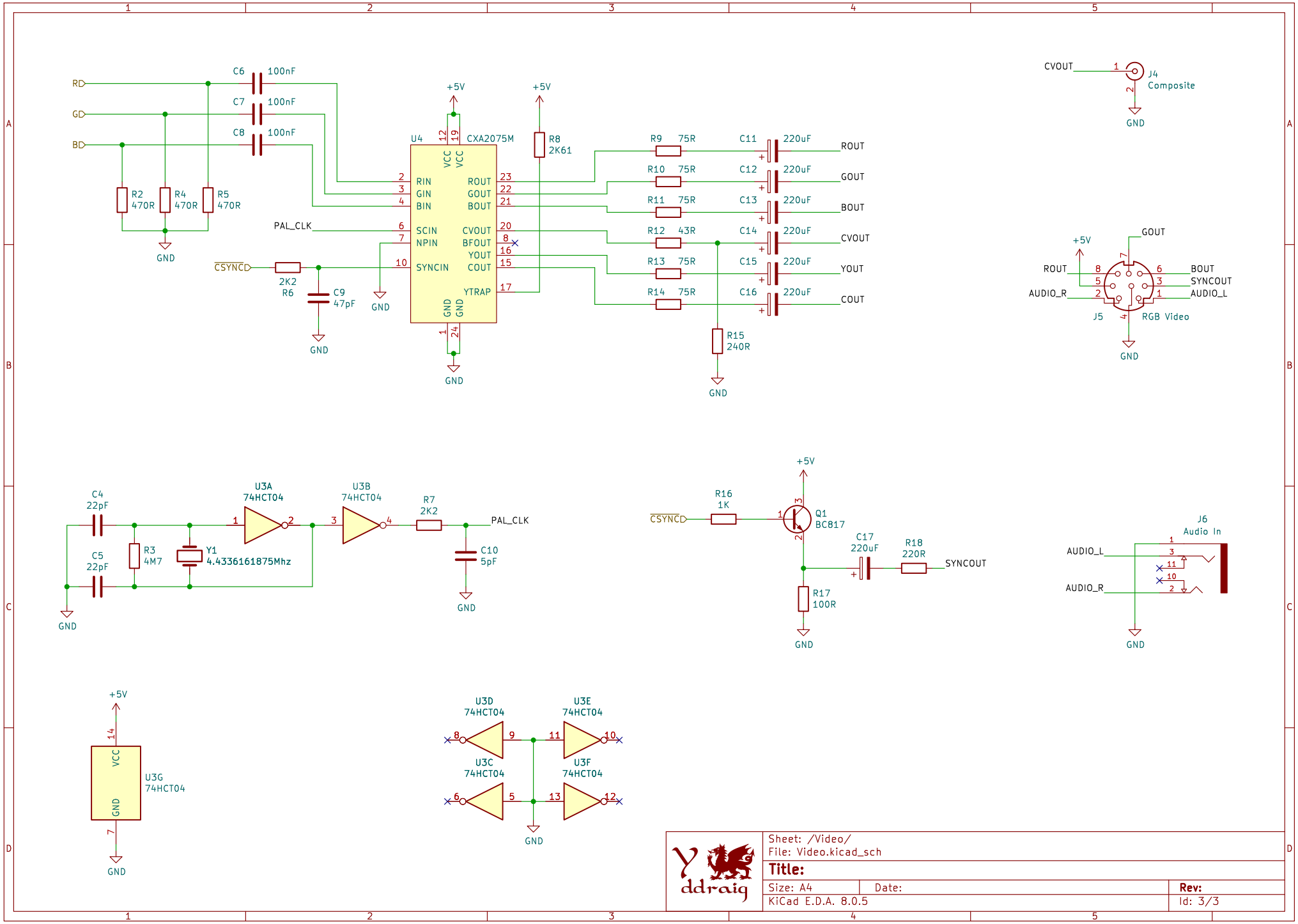
RD
GD
BD
C6 100nF
C7 100nF
C8 100nF
R2 470R
R4 470R
R5 470R
GND
+5V
U4 CXA2075M
VCC
RIN
GIN
BIN
SCIN
NPIN
SYNCIN
ROUT
GOUT
BOUT
CVOUT
BFOUT
YOUT
COUT
YTRAP
PAL_CLK
CSYNC
2K2 R6
C9 47pF
R8 2K61
R9 75R
R10 75R
R11 75R
R12 43R
R13 75R
R14 75R
C11 220uF
C12 220uF
C13 220uF
C14 220uF
C15 220uF
C16 220uF
R15 240R
CVOUT
J4 Composite
GOUT
ROUT
BOUT
SYNCOUT
AUDIO_R
AUDIO_L
J5 RGB Video
C4 22pF
C5 22pF
R3 4M7
Y1 4.4336161875Mhz
U3A 74HCT04
U3B 74HCT04
R7 2K2
C10 5pF
R16 1K
Q1 BC817
C17 220uF
R18 220R
R17 100R
SYNCOUT
J6 Audio In
AUDIO_L
AUDIO_R
U3G 74HCT04
U3D 74HCT04
U3E 74HCT04
U3C 74HCT04
U3F 74HCT04
Sheet: /Video/
File: Video.kicad_sch
Title:
Size: A4
Date:
Rev:
KiCad E.D.A. 8.0.5
Id: 3/3