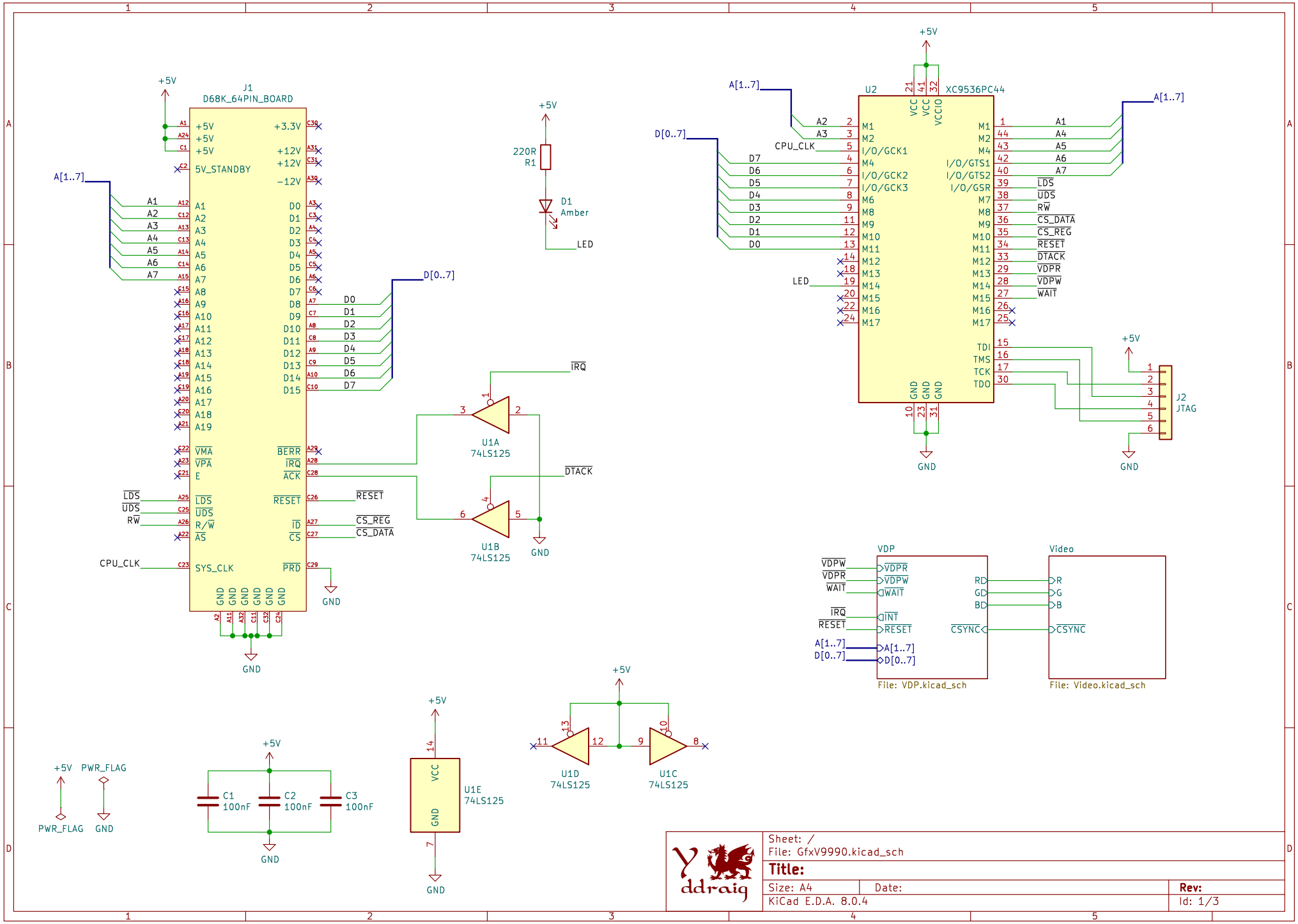
J1
D68K_64PIN_BOARD
+5V
+3.3V
+12V
-12V
5V_STANDBY
A[1..7]
D[0..7]
VMA
VPA
E
LDS
UDS
R/W
AS
SYS_CLK
BERR
IRQ
ACK
RESET
ID
CS
PRD
CS_REG
CS_DATA
CPU_CLK
GND
220R
R1
D1
Amber
LED
U1A
74LS125
U1B
74LS125
DTACK
U2
XC9536PC44
VCC
VCCIO
I/O/GCK1
I/O/GCK2
I/O/GCK3
I/O/GTS1
I/O/GTS2
I/O/GSR
TDI
TMS
TCK
TDO
J2
JTAG
VDP
Video
VDPR
VDPW
WAIT
INT
RD
GD
BD
CSYNC
R
G
B
File: VDP.kicad_sch
File: Video.kicad_sch
PWR_FLAG
C1
100nF
C2
100nF
C3
100nF
U1E
74LS125
U1D
74LS125
U1C
74LS125
Sheet: /
File: GfxV9990.kicad_sch
Title:
Size: A4
Date:
Rev:
KiCad E.D.A. 8.0.4
Id: 1/3

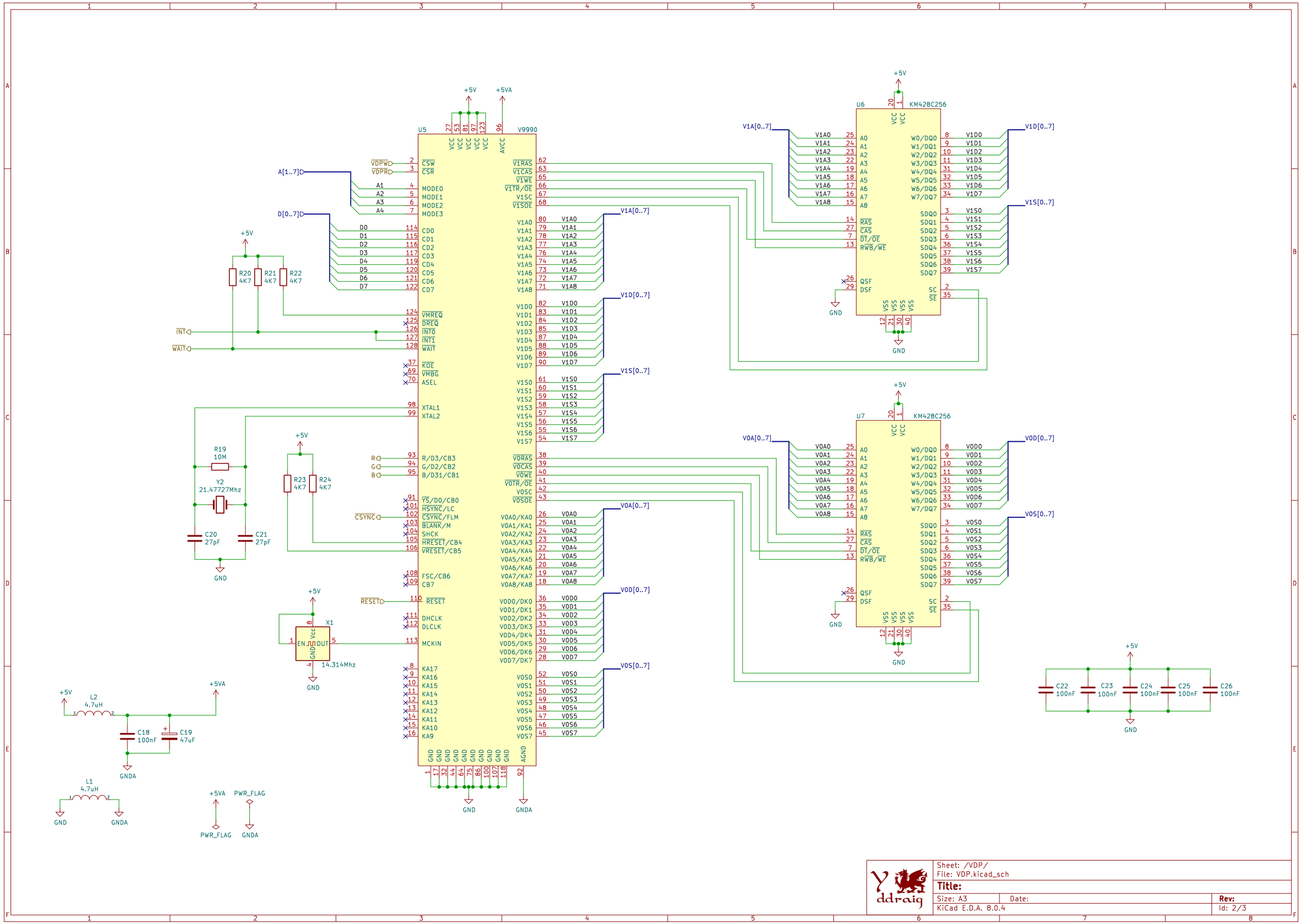
U5
V9990
U6
KM428C256
U7
KM428C256
+5V
+5VA
GND
GNDA
A[1..7]
D[0..7]
VDPWD
VDPRD
INT
WAIT
R
G
B
CSYNC
RESETD
V1A[0..7]
V1D[0..7]
V1S[0..7]
V0A[0..7]
V0D[0..7]
V0S[0..7]
R20 4K7
R21 4K7
R22 4K7
R23 4K7
R24 4K7
R19 10M
Y2 21.47727Mhz
C20 27pF
C21 27pF
X1
14.314Mhz
L2 4.7uH
C18 100nF
C19 47uF
L1 4.7uH
C22 100nF
C23 100nF
C24 100nF
C25 100nF
C26 100nF
PWR_FLAG
Sheet: /VDP/
File: VDP.kicad_sch
Title:
Size: A3
Date:
Rev:
KiCad E.D.A. 8.0.4
Id: 2/3

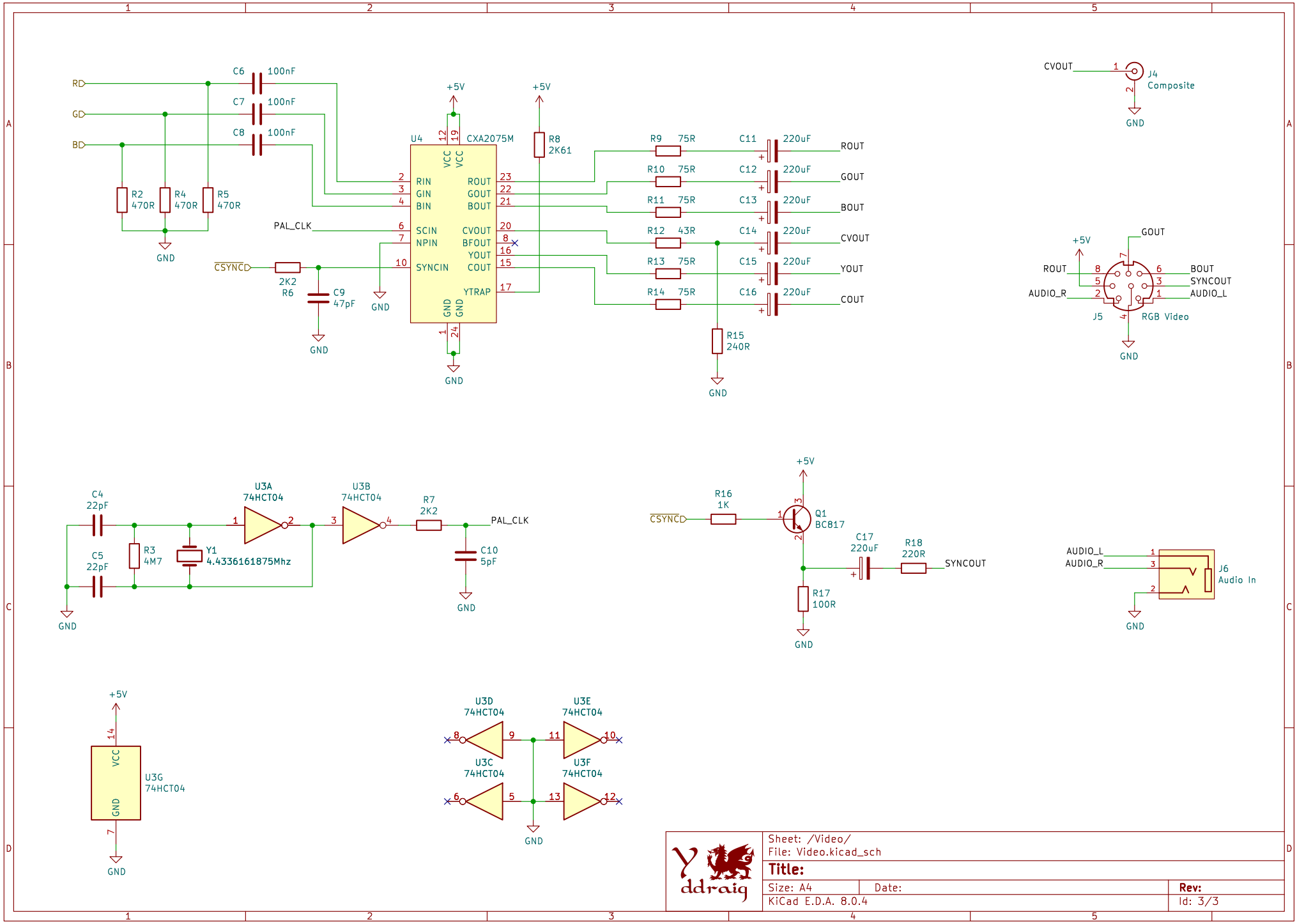
RD
GD
BD
C6 100nF
C7 100nF
C8 100nF
R2 470R
R4 470R
R5 470R
GND
+5V
U4 CXA2075M
VCC
RIN
GIN
BIN
SCIN
NPIN
SYNCIN
ROUT
GOUT
BOUT
CVOUT
BFOUT
YOUT
COUT
YTRAP
PAL_CLK
CSYNC
2K2 R6
C9 47pF
R8 2K61
R9 75R
R10 75R
R11 75R
R12 43R
R13 75R
R14 75R
C11 220uF
C12 220uF
C13 220uF
C14 220uF
C15 220uF
C16 220uF
R15 240R
CVOUT
J4 Composite
GOUT
ROUT
BOUT
SYNCOUT
AUDIO_R
AUDIO_L
J5 RGB Video
C4 22pF
C5 22pF
R3 4M7
Y1 4.4336161875Mhz
U3A 74HCT04
U3B 74HCT04
R7 2K2
C10 5pF
R16 1K
Q1 BC817
C17 220uF
R18 220R
R17 100R
SYNCOUT
J6 Audio In
U3G 74HCT04
U3D 74HCT04
U3E 74HCT04
U3C 74HCT04
U3F 74HCT04
Sheet: /Video/
File: Video.kicad_sch
Title:
Size: A4
Date:
Rev:
KiCad E.D.A. 8.0.4
Id: 3/3