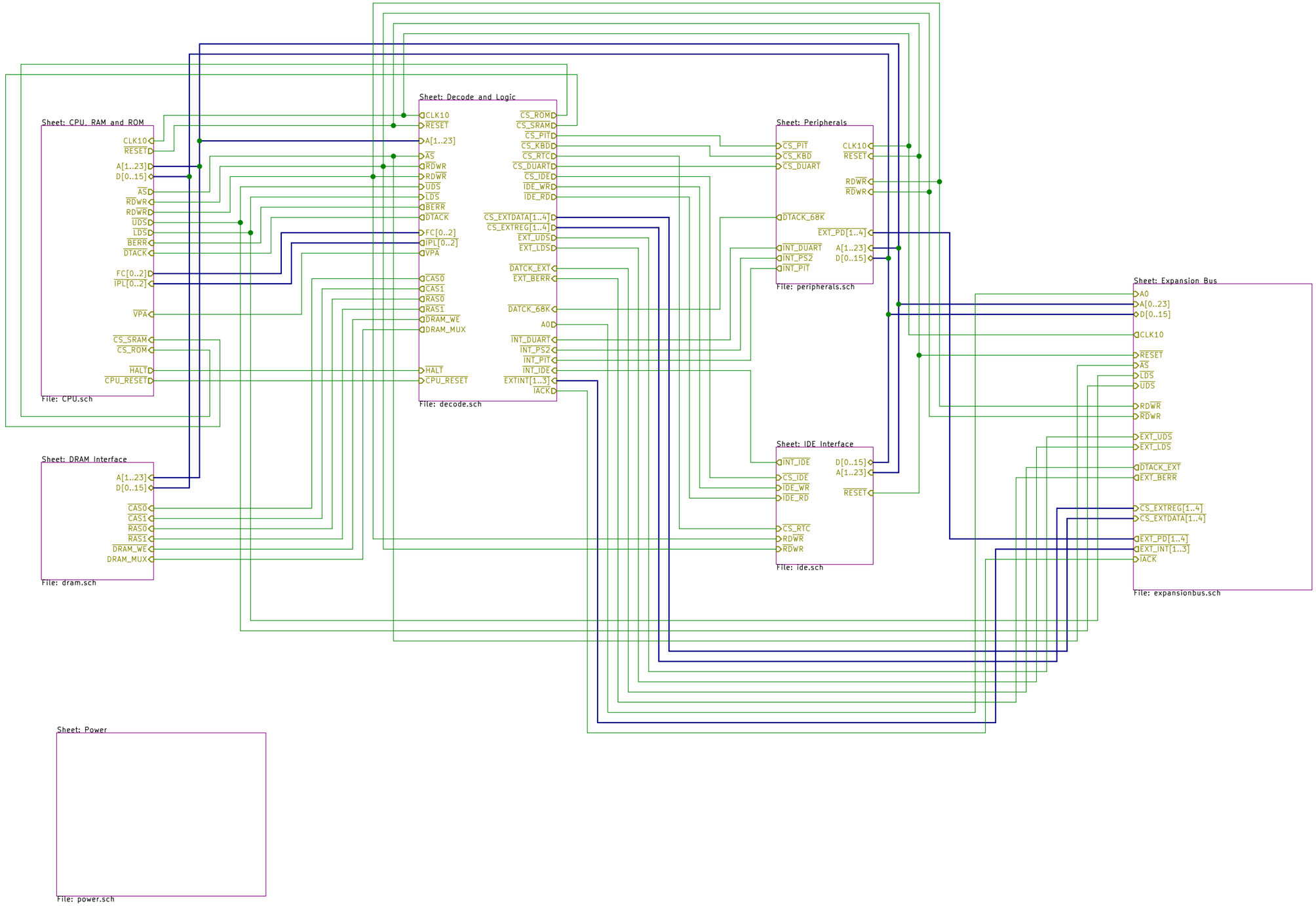

Sheet: /
File: yddraig.sch

Title:

Size: A3	Date:	**Rev:**
KiCad E.D.A. kicad (5.1.9-16-g1737927814)-1		Id: 1/9

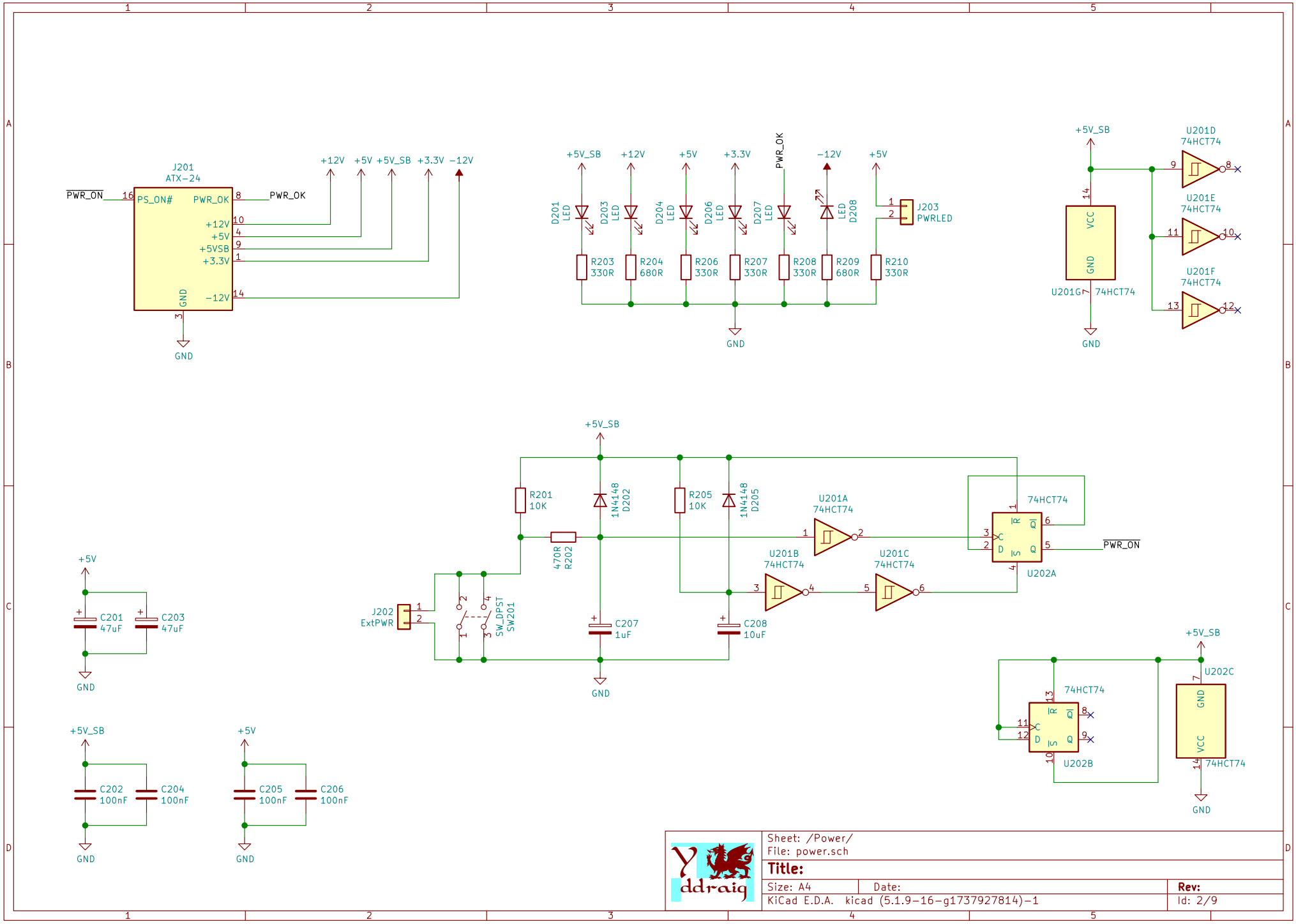
J201
ATX-24
PWR_ON
PS_ON#
PWR_OK
+12V
+5V
+5VSB
+3.3V
-12V
GND
+5V_SB
+12V
+5V
+3.3V
PWR_OK
-12V
+5V
D201 LED
D203 LED
D204 LED
D206 LED
D207 LED
LED D208
J203 PWRLED
R203 330R
R204 680R
R206 330R
R207 330R
R208 330R
R209 680R
R210 330R
U201D 74HCT74
U201E 74HCT74
U201F 74HCT74
U201G 74HCT74
VCC
GND
R201 10K
1N4148 D202
R205 10K
1N4148 D205
470R R202
J202 ExtPWR
SW_DPST SW201
C207 1uF
C208 10uF
U201A 74HCT74
U201B 74HCT74
U201C 74HCT74
74HCT74
U202A
U202B
U202C
C201 47uF
C203 47uF
C202 100nF
C204 100nF
C205 100nF
C206 100nF
Sheet: /Power/
File: power.sch
Title:
Size: A4
Date:
Rev:
KiCad E.D.A. kicad (5.1.9-16-g1737927814)-1
Id: 2/9

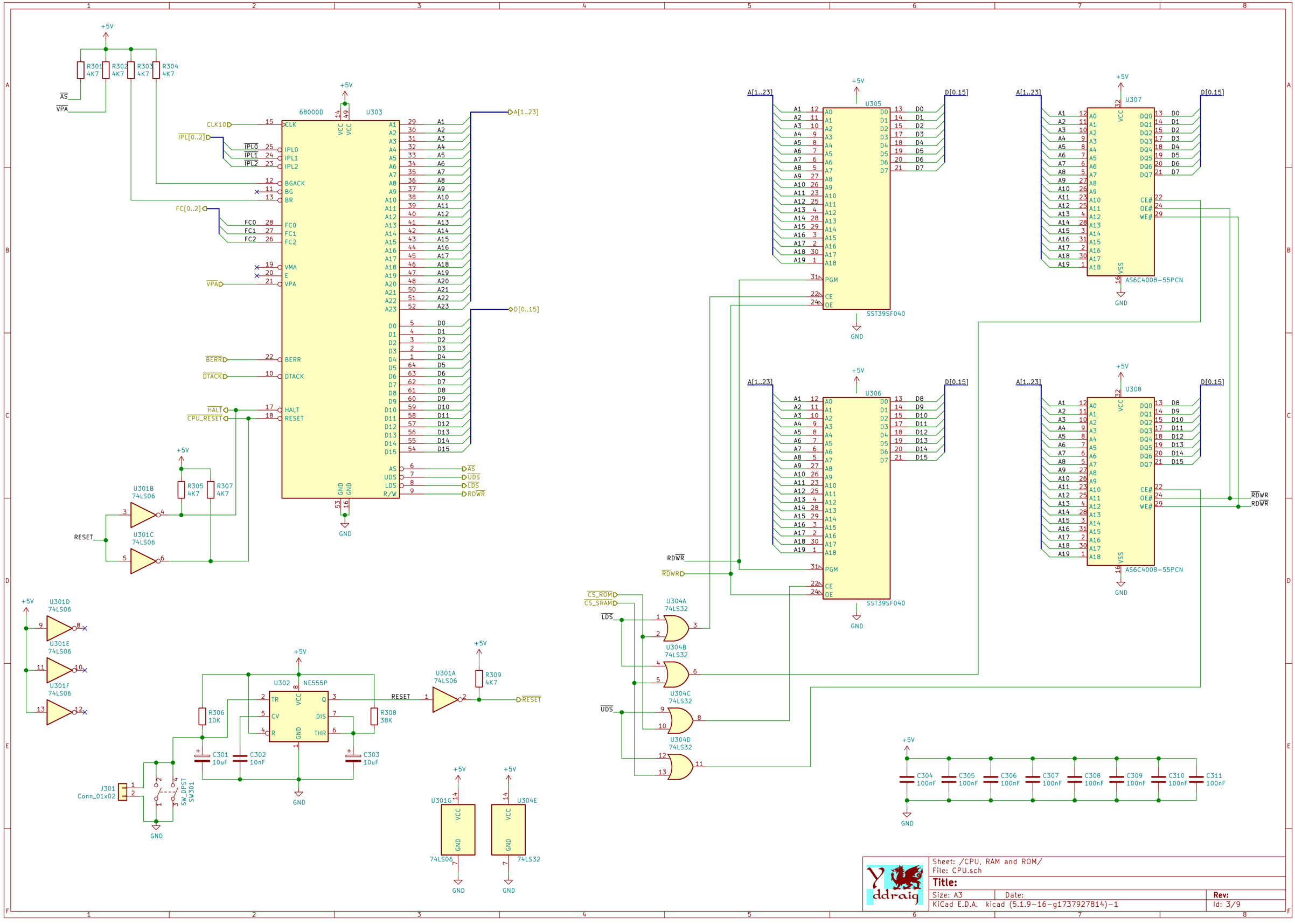
68000D
U303
U305
SST39SF040
U306
SST39SF040
U307
AS6C4008-55PCN
U308
AS6C4008-55PCN
U301B 74LS06
U301C 74LS06
U301D 74LS06
U301E 74LS06
U301F 74LS06
U301A 74LS06
U302 NE555P
U304A 74LS32
U304B 74LS32
U304C 74LS32
U304D 74LS32
U301G 74LS06
U304E 74LS32
J301 Conn_01x02
SW301 SW_DPST
R301 4K7
R302 4K7
R303 4K7
R304 4K7
R305 4K7
R306 10K
R307 4K7
R308 38K
R309 4K7
C301 10uF
C302 10nF
C303 10uF
C304 100nF
C305 100nF
C306 100nF
C307 100nF
C308 100nF
C309 100nF
C310 100nF
C311 100nF
+5V
GND
A[1..23]
D[0..15]
IPL[0..2]
FC[0..2]
CLK10
BERR
DTACK
HALT
CPU_RESET
RESET
RDWR
CS_ROM
CS_SRAM
LDS
UDS
AS
VPA
Sheet: /CPU, RAM and ROM/
File: CPU.sch
Title:
Size: A3
Date:
Rev:
KiCad E.D.A. kicad (5.1.9-16-g1737927814)-1
Id: 3/9

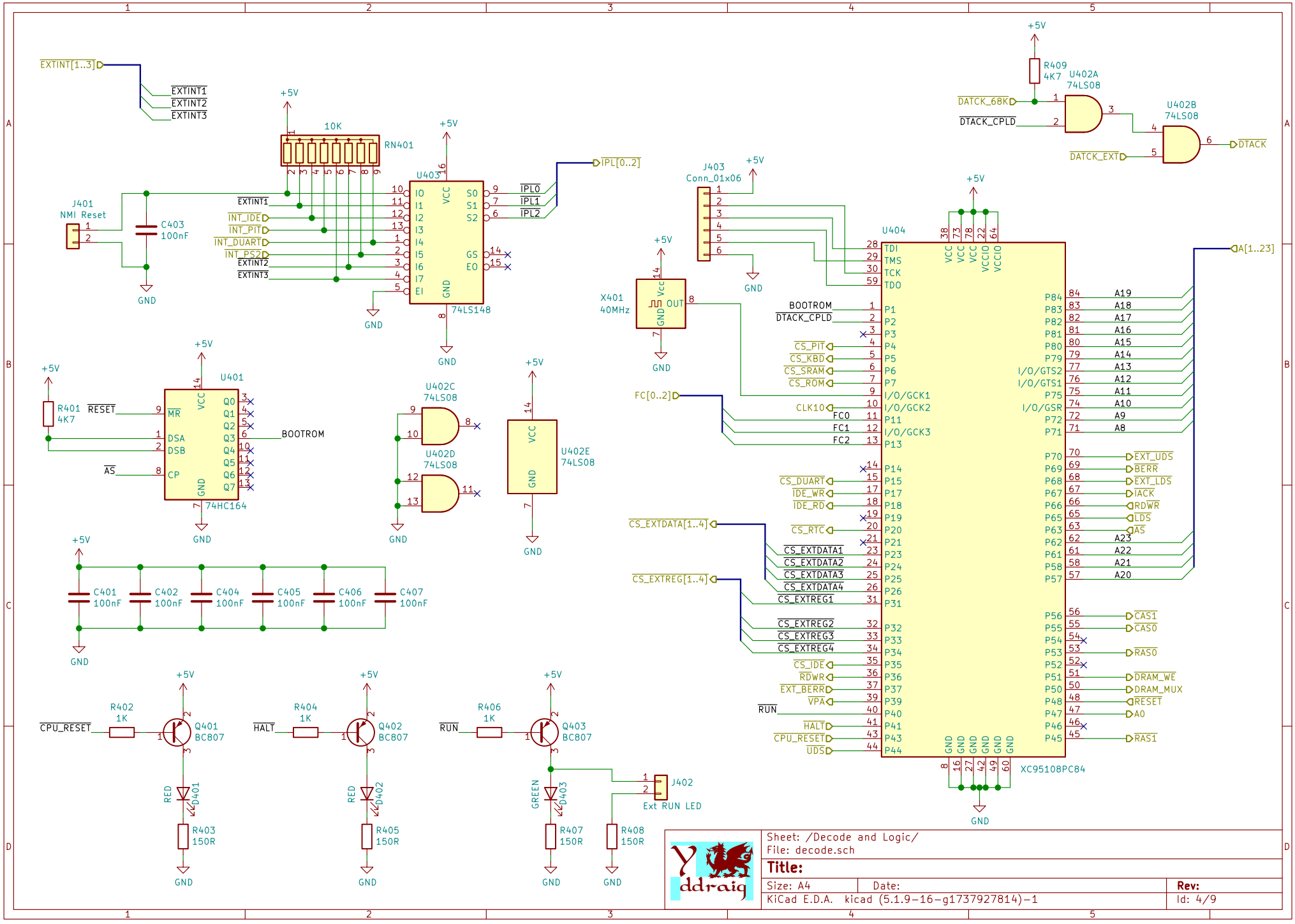
EXTINT[1..3]
EXTINT1
EXTINT2
EXTINT3
+5V
10K
RN401
U403
74LS148
IPL[0..2]
IPL0
IPL1
IPL2
INT_IDE
INT_PIT
INT_DUART
INT_PS2
J401
NMI Reset
C403
100nF
GND
R409
4K7
U402A
74LS08
U402B
74LS08
DATCK_68K
DTACK_CPLD
DATCK_EXT
DTACK
J403
Conn_01x06
X401
40MHz
U404
XC95108PC84
A[1..23]
BOOTROM
FC[0..2]
CS_PIT
CS_KBD
CS_SRAM
CS_ROM
CLK10
FC0
FC1
FC2
CS_DUART
IDE_WR
IDE_RD
CS_RTC
CS_EXTDATA[1..4]
CS_EXTDATA1
CS_EXTDATA2
CS_EXTDATA3
CS_EXTDATA4
CS_EXTREG[1..4]
CS_EXTREG1
CS_EXTREG2
CS_EXTREG3
CS_EXTREG4
CS_IDE
RDWR
EXT_BERR
VPA
RUN
HALT
CPU_RESET
UDS
EXT_UDS
BERR
EXT_LDS
IACK
LDS
AS
CAS1
CAS0
RAS0
DRAM_WE
DRAM_MUX
RESET
A0
RAS1
R401
4K7
U401
74HC164
U402C
74LS08
U402D
74LS08
U402E
74LS08
C401
100nF
C402
100nF
C404
100nF
C405
100nF
C406
100nF
C407
100nF
R402
1K
Q401
BC807
R404
1K
Q402
BC807
R406
1K
Q403
BC807
RED
D401
R403
150R
RED
D402
R405
150R
GREEN
D403
R407
150R
R408
150R
J402
Ext RUN LED
Sheet: /Decode and Logic/
File: decode.sch
Title:
Size: A4
Date:
Rev:
KiCad E.D.A. kicad (5.1.9-16-g1737927814)-1
Id: 4/9

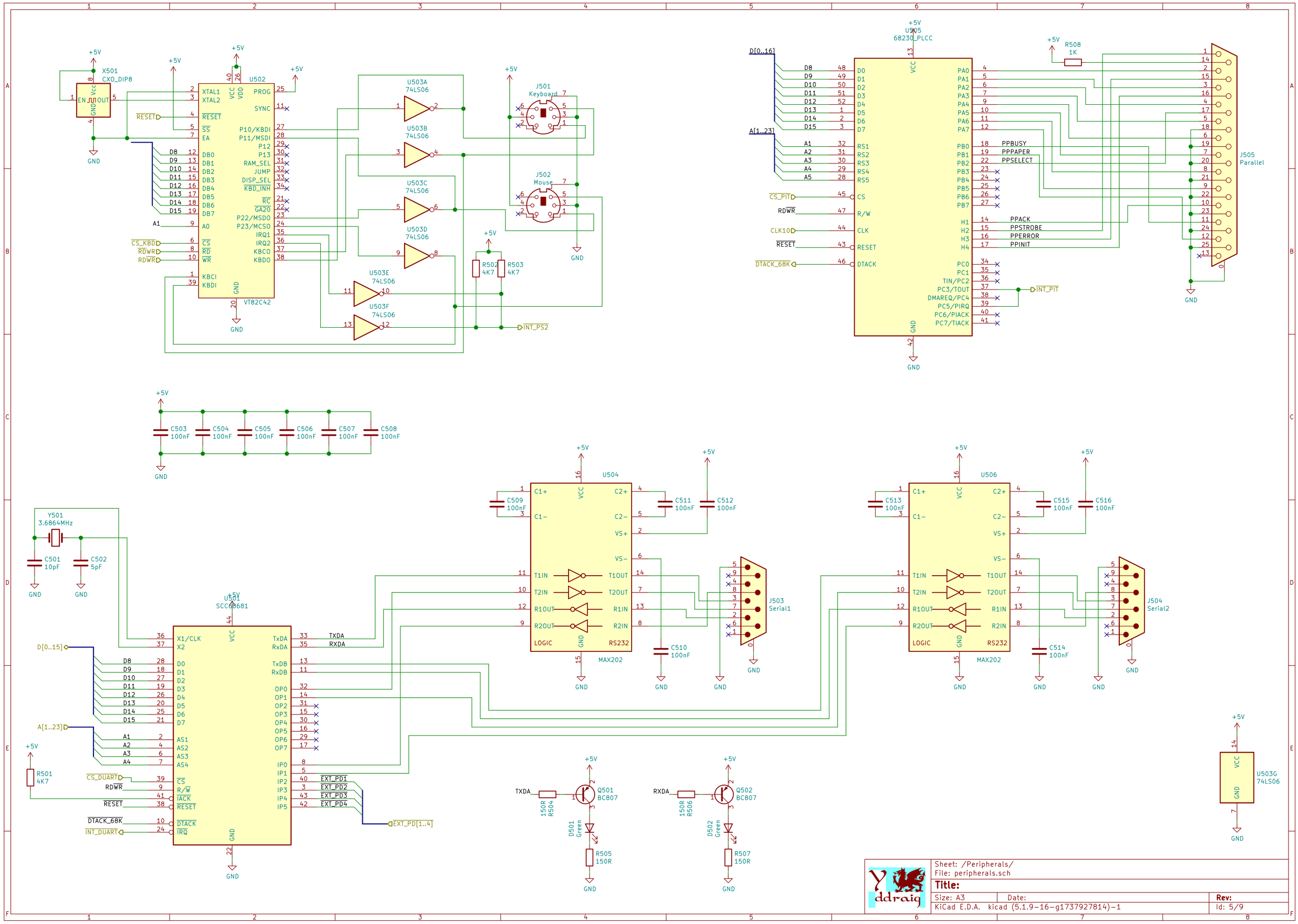
X501
CXO_DIP8
U502
VT82C42
U503A
74LS06
U503B
74LS06
U503C
74LS06
U503D
74LS06
U503E
74LS06
U503F
74LS06
J501
Keyboard
J502
Mouse
R502
4K7
R503
4K7
INT_PS2
U505
68230_PLCC
R508
1K
J505
Parallel
INT_PIT
C503
100nF
C504
100nF
C505
100nF
C506
100nF
C507
100nF
C508
100nF
Y501
3.6864MHz
C501
10pF
C502
5pF
U501
SCC68681
R501
4K7
U504
MAX202
J503
Serial1
U506
MAX202
J504
Serial2
Q501
BC807
Q502
BC807
D501
Green
D502
Green
R504
150R
R505
150R
R506
150R
R507
150R
U503G
74LS06
EXT_PD[1..4]
Sheet: /Peripherals/
File: peripherals.sch
Title:
Size: A3
Date:
Rev:
KiCad E.D.A. kicad (5.1.9-16-g1737927814)-1
Id: 5/9

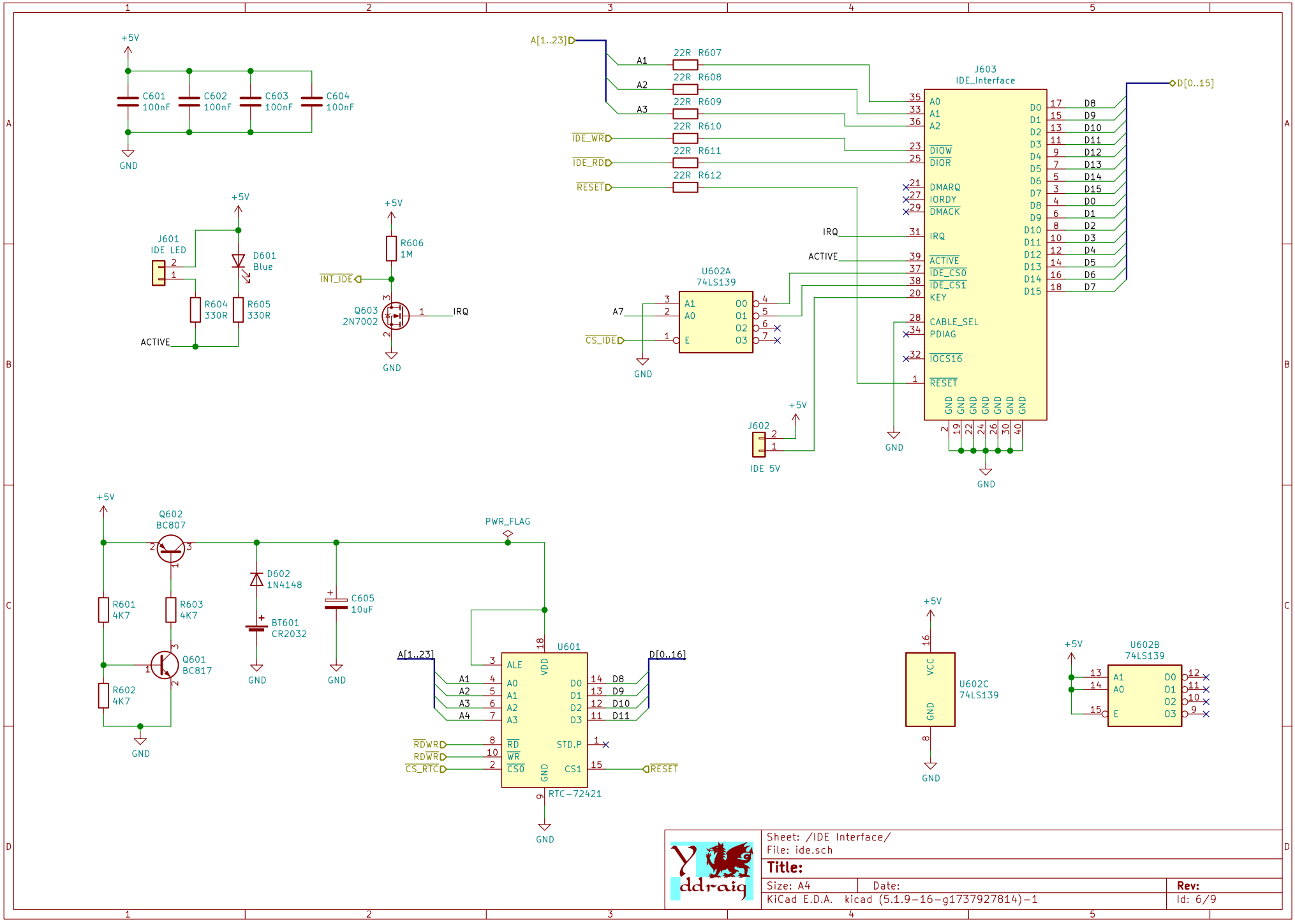

Sheet: /IDE Interface/
File: ide.sch

Title:

Size: A4	Date:	Rev:
KiCad E.D.A. kicad (5.1.9-16-g1737927814)-1		Id: 6/9

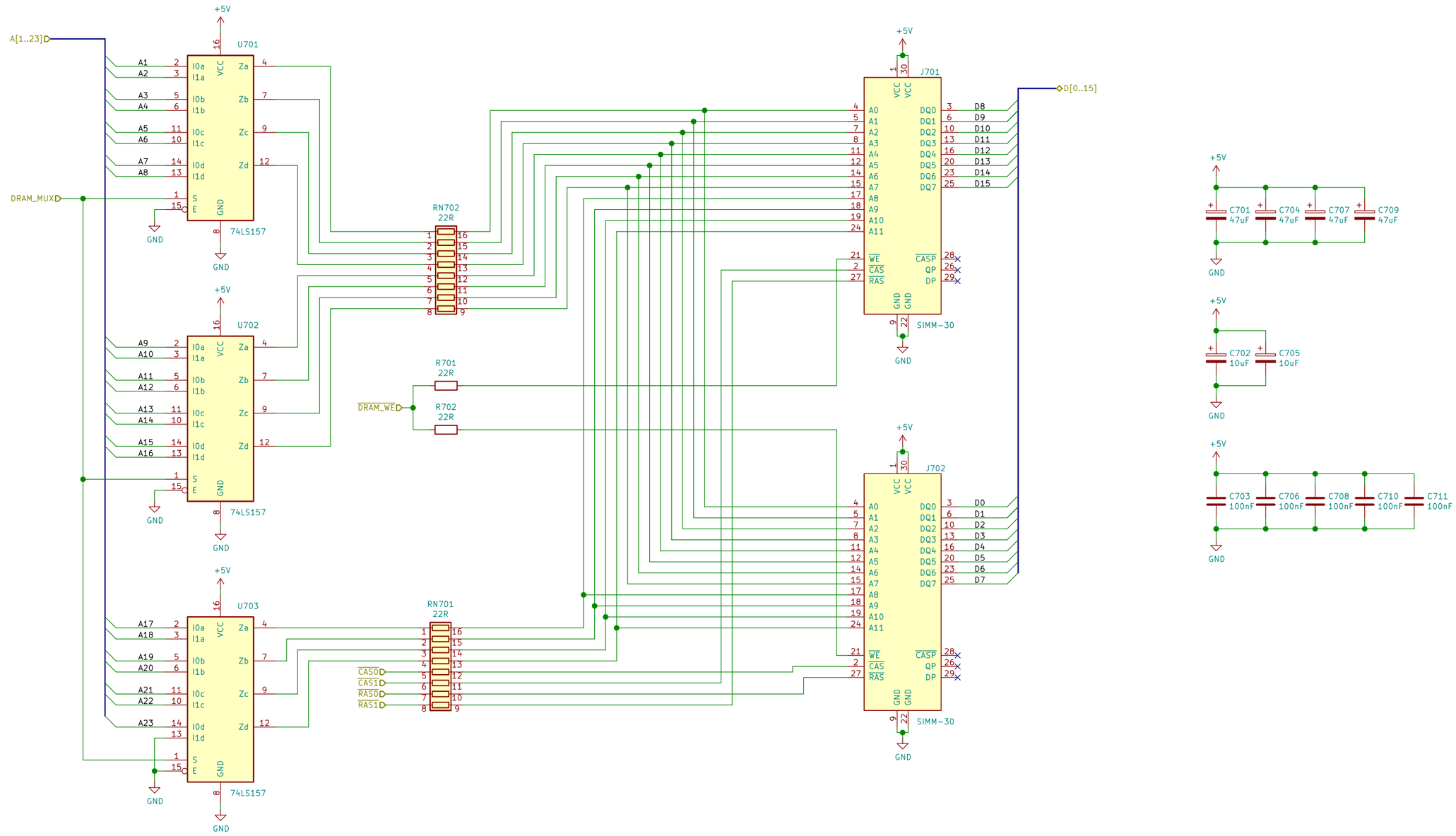

Sheet: /DRAM Interface/
File: dram.sch

Title:

Size: A3 | Date: | **Rev:**

KiCad E.D.A. kicad (5.1.9-16-g1737927814)-1 | Id: 7/9

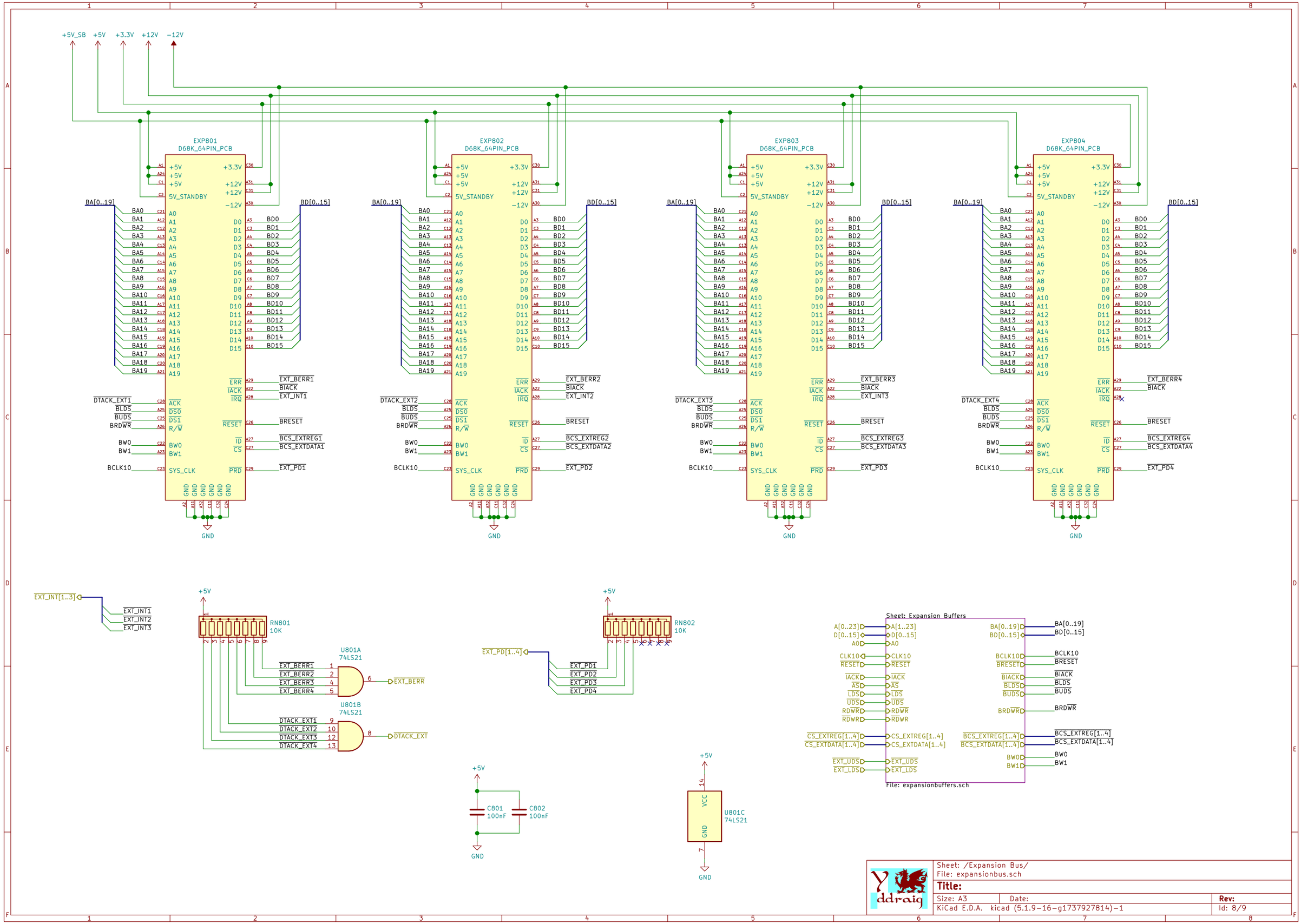
+5V_SB
+5V
+3.3V
+12V
−12V
EXP801
D68K_64PIN_PCB
EXP802
D68K_64PIN_PCB
EXP803
D68K_64PIN_PCB
EXP804
D68K_64PIN_PCB
5V_STANDBY
BA[0..19]
BD[0..15]
EXT_BERR1
EXT_BERR2
EXT_BERR3
EXT_BERR4
BIACK
EXT_INT1
EXT_INT2
EXT_INT3
BRESET
BCS_EXTREG1
BCS_EXTREG2
BCS_EXTREG3
BCS_EXTREG4
BCS_EXTDATA1
BCS_EXTDATA2
BCS_EXTDATA3
BCS_EXTDATA4
EXT_PD1
EXT_PD2
EXT_PD3
EXT_PD4
DTACK_EXT1
DTACK_EXT2
DTACK_EXT3
DTACK_EXT4
BLDS
BUDS
BRDWR
BW0
BW1
BCLK10
GND
EXT_INT[1..3]
RN801
10K
RN802
10K
U801A
74LS21
U801B
74LS21
EXT_BERR
DTACK_EXT
EXT_PD[1..4]
C801
100nF
C802
100nF
U801C
74LS21
VCC
Sheet: Expansion Buffers
File: expansionbuffers.sch
A[0..23]
D[0..15]
A0
CLK10
RESET
IACK
AS
LDS
UDS
RDWR
CS_EXTREG[1..4]
CS_EXTDATA[1..4]
EXT_UDS
EXT_LDS
A[1..23]
D[0..15]
CS_EXTREG[1..4]
CS_EXTDATA[1..4]
BCS_EXTREG[1..4]
BCS_EXTDATA[1..4]
Sheet: /Expansion Bus/
File: expansionbus.sch
Title:
Size: A3
Date:
Rev:
KiCad E.D.A. kicad (5.1.9-16-g1737927814)-1
Id: 8/9

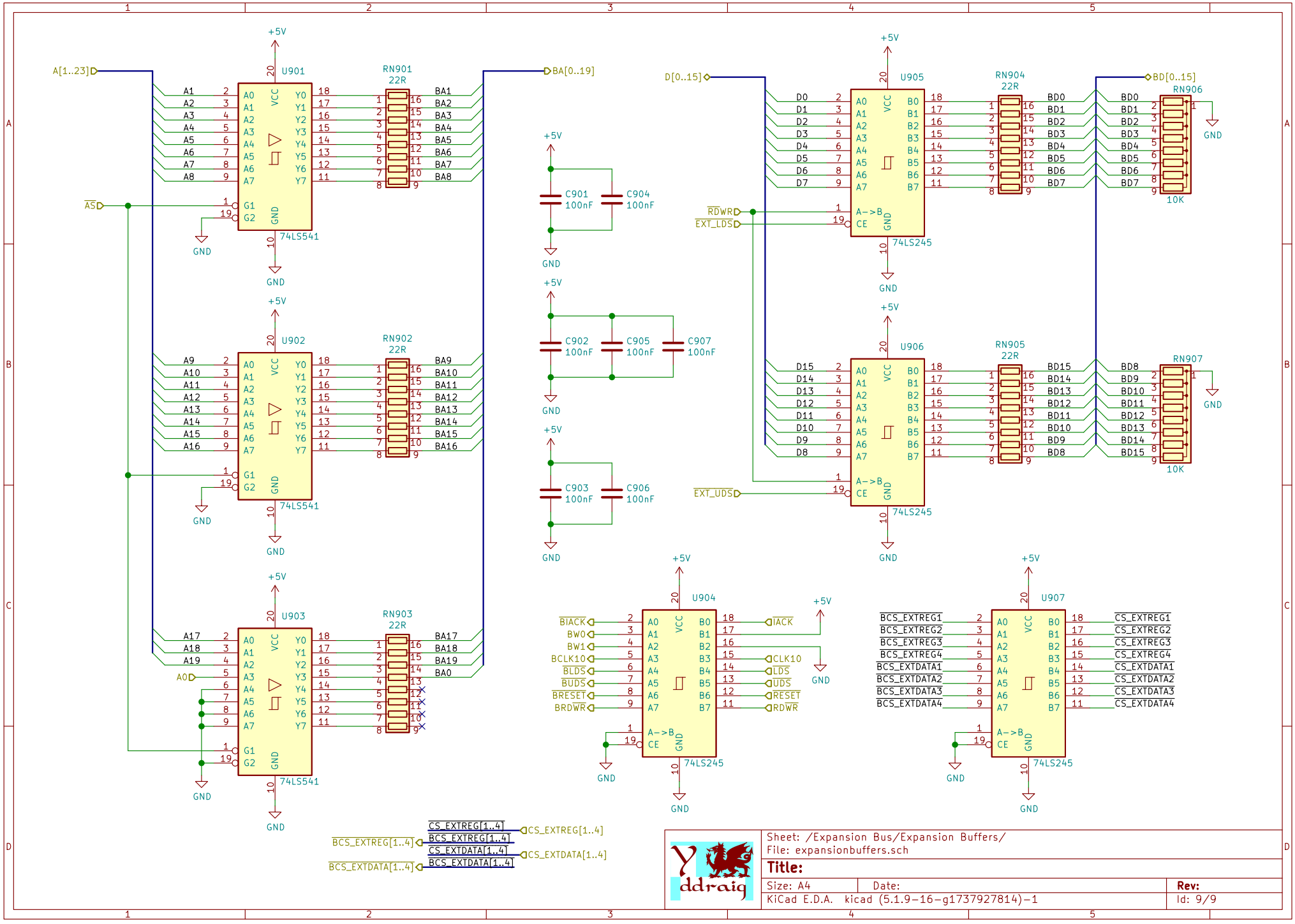
A[1..23]
AS
U901
74LS541
RN901
22R
BA[0..19]
U902
RN902
U903
RN903
A0
+5V
GND
C901 100nF
C904 100nF
C902 100nF
C905 100nF
C907 100nF
C903 100nF
C906 100nF
D[0..15]
RDWR
EXT_LDS
EXT_UDS
U905
74LS245
RN904
BD[0..15]
RN906
10K
U906
RN905
RN907
U904
BIACK
BW0
BW1
BCLK10
BLDS
BUDS
BRESET
BRDWR
IACK
CLK10
LDS
UDS
RESET
RDWR
U907
BCS_EXTREG1
BCS_EXTREG2
BCS_EXTREG3
BCS_EXTREG4
BCS_EXTDATA1
BCS_EXTDATA2
BCS_EXTDATA3
BCS_EXTDATA4
CS_EXTREG1
CS_EXTREG2
CS_EXTREG3
CS_EXTREG4
CS_EXTDATA1
CS_EXTDATA2
CS_EXTDATA3
CS_EXTDATA4
CS_EXTREG[1..4]
BCS_EXTREG[1..4]
CS_EXTDATA[1..4]
BCS_EXTDATA[1..4]
Sheet: /Expansion Bus/Expansion Buffers/
File: expansionbuffers.sch
Title:
Size: A4
Date:
Rev:
KiCad E.D.A. kicad (5.1.9-16-g1737927814)-1
Id: 9/9