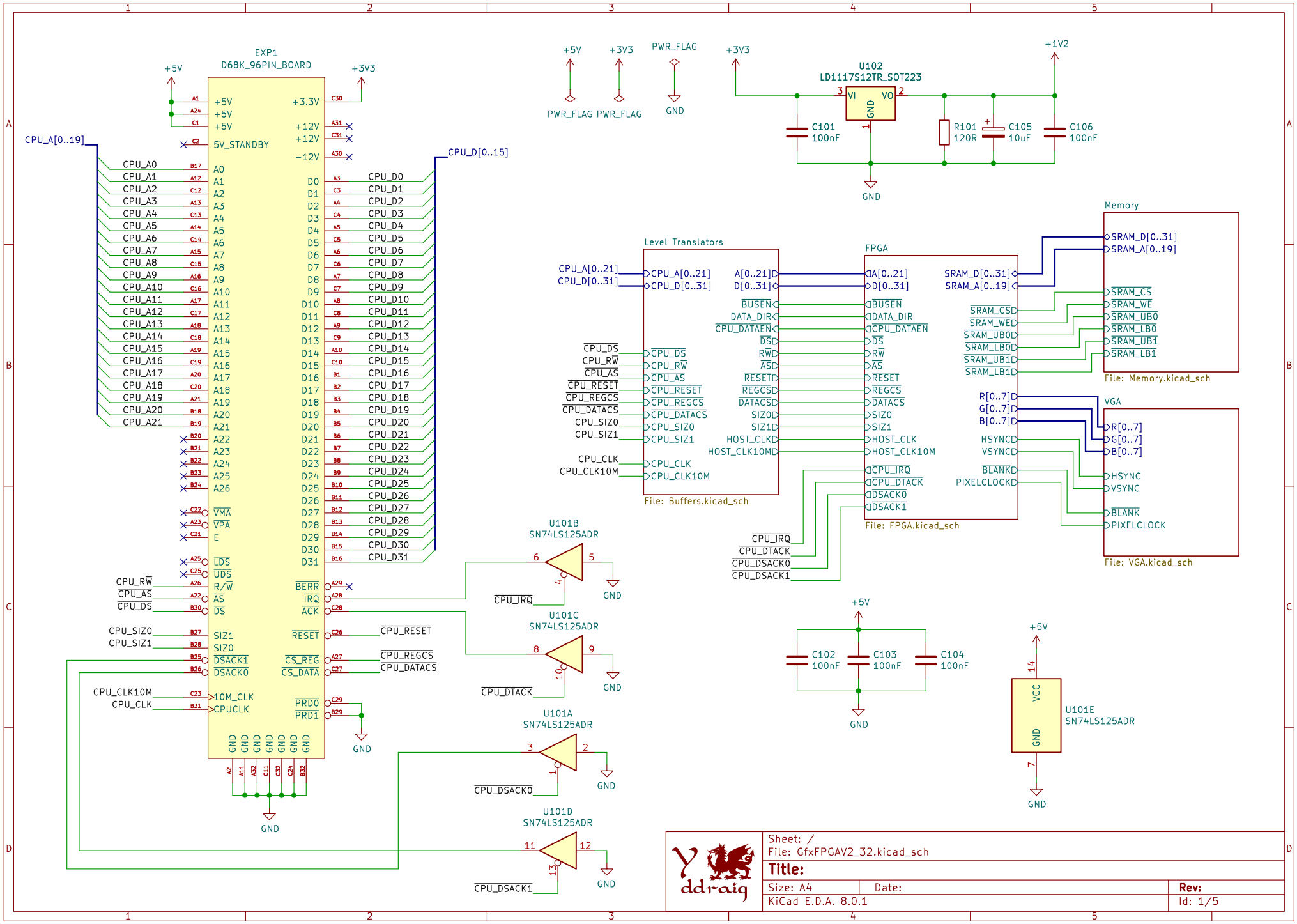
EXP1
D68K_96PIN_BOARD
+5V
+3V3
5V_STANDBY
+12V
-12V
CPU_A[0..19]
CPU_D[0..15]
VMA
VPA
E
LDS
UDS
R/W
AS
DS
BERR
IRQ
ACK
RESET
CS_REG
CS_DATA
PRD0
PRD1
SIZ1
SIZ0
DSACK1
DSACK0
10M_CLK
CPUCLK
GND
PWR_FLAG
U102
LD1117S12TR_SOT223
VI
VO
C101
100nF
R101
120R
C105
10uF
C106
100nF
+1V2
Level Translators
File: Buffers.kicad_sch
FPGA
File: FPGA.kicad_sch
Memory
SRAM_D[0..31]
SRAM_A[0..19]
SRAM_CS
SRAM_WE
SRAM_UB0
SRAM_LB0
SRAM_UB1
SRAM_LB1
File: Memory.kicad_sch
VGA
R[0..7]
G[0..7]
B[0..7]
HSYNC
VSYNC
BLANK
PIXELCLOCK
File: VGA.kicad_sch
U101B
SN74LS125ADR
U101C
SN74LS125ADR
U101A
SN74LS125ADR
U101D
SN74LS125ADR
U101E
SN74LS125ADR
C102
100nF
C103
100nF
C104
100nF
CPU_IRQ
CPU_DTACK
CPU_DSACK0
CPU_DSACK1
CPU_RESET
CPU_REGCS
CPU_DATACS
CPU_CLK10M
CPU_CLK
Sheet: /
File: GfxFPGAV2_32.kicad_sch
Title:
Size: A4
Date:
Rev:
KiCad E.D.A. 8.0.1
Id: 1/5

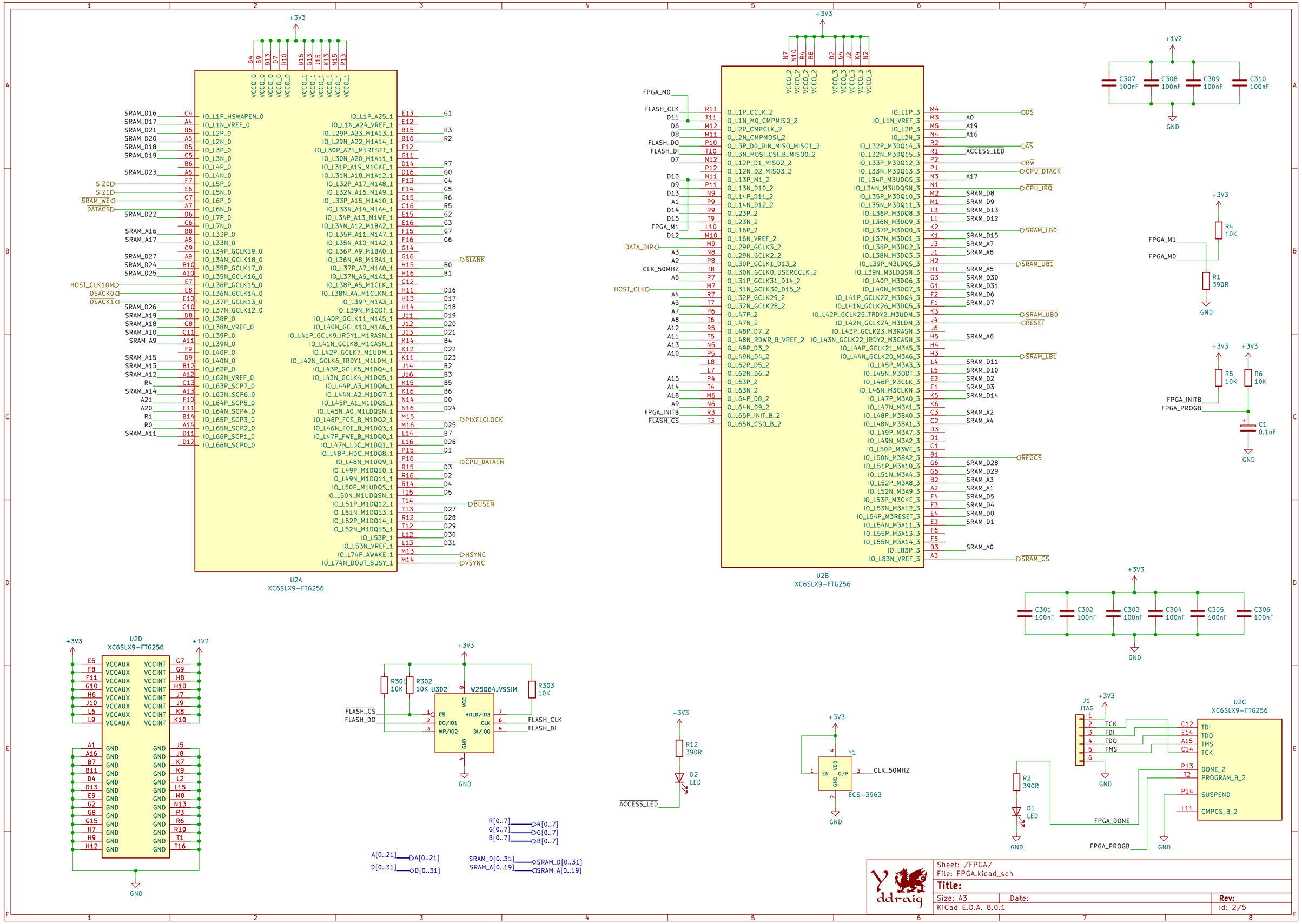
U2A
XC6SLX9-FTG256
U2B
XC6SLX9-FTG256
U2C
XC6SLX9-FTG256
U2D
XC6SLX9-FTG256
+3V3
+1V2
GND
C307 100nF
C308 100nF
C309 100nF
C310 100nF
R4 10K
R1 390R
R5 10K
R6 10K
C1 0.1uF
C301 100nF
C302 100nF
C303 100nF
C304 100nF
C305 100nF
C306 100nF
R301 10K
R302 10K
R303 10K
U302
W25Q64JVSSIM
R12 390R
D2 LED
Y1
ECS-3963
CLK_50MHZ
J1 JTAG
R2 390R
D1 LED
FPGA_DONE
FPGA_PROGB
FPGA_M0
FPGA_M1
FPGA_INITB
FLASH_CS
FLASH_DO
FLASH_CLK
FLASH_DI
ACCESS_LED
HOST_CLK
DATA_DIR
CLK_50MHZ
SIZ0
SIZ1
SRAM_WE
DATACS
HOST_CLK10MD
DSACK0
DSACK1
BLANK
PIXELCLOCK
CPU_DATAEN
BUSEN
HSYNC
VSYNC
DS
AS
RW
CPU_DTACK
CPU_IRQ
SRAM_LB0
SRAM_UB1
SRAM_UB0
RESET
SRAM_LB1
REGCS
SRAM_CS
R[0..7]
G[0..7]
B[0..7]
A[0..21]
D[0..31]
SRAM_D[0..31]
SRAM_A[0..19]
Sheet: /FPGA/
File: FPGA.kicad_sch
Title:
Size: A3
Date:
Rev:
KiCad E.D.A. 8.0.1
Id: 2/5

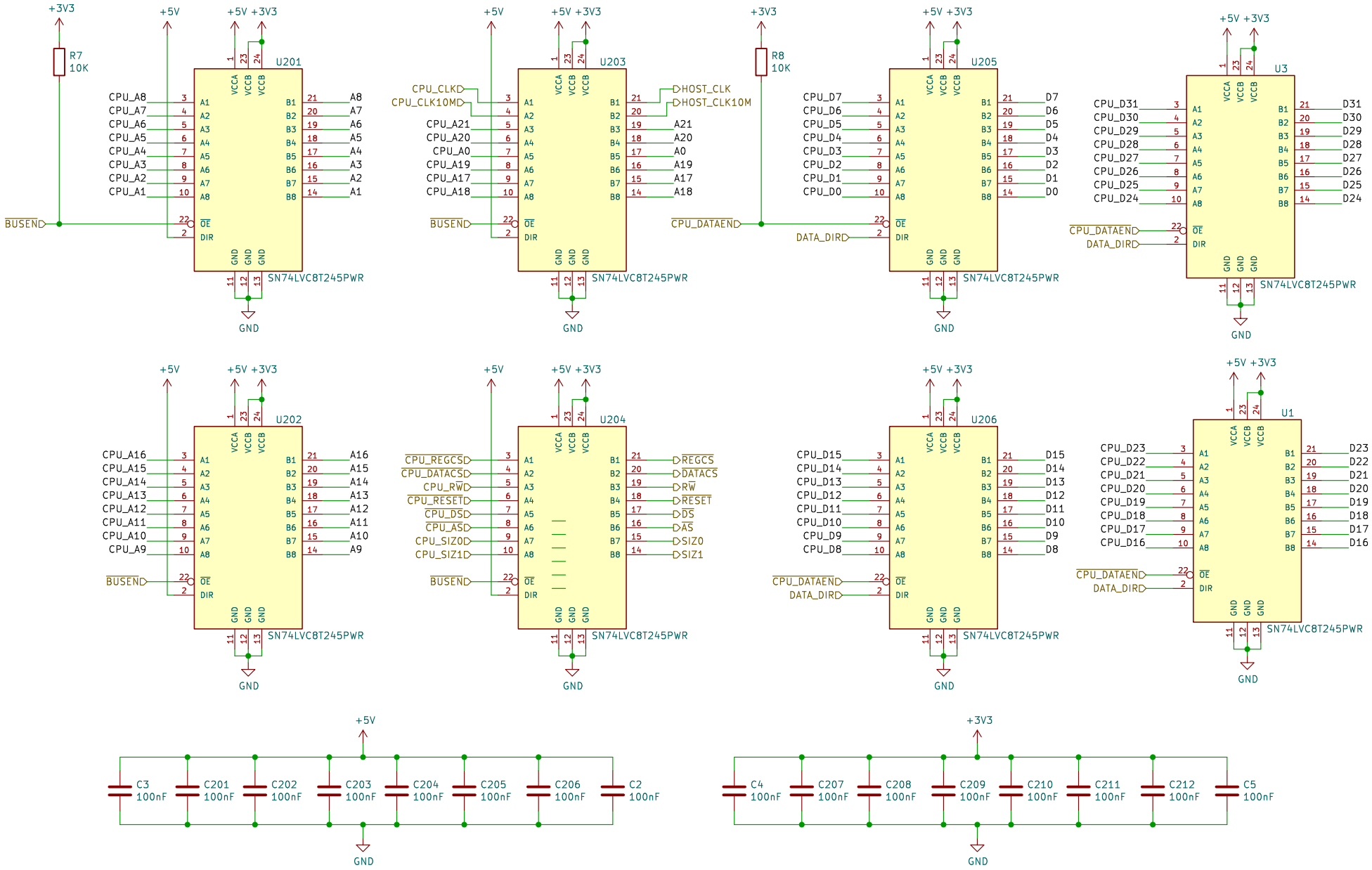

Sheet: /Level Translators/
File: Buffers.kicad_sch

Title:

Size: A4	Date:	Rev:
KiCad E.D.A. 8.0.1		Id: 3/5

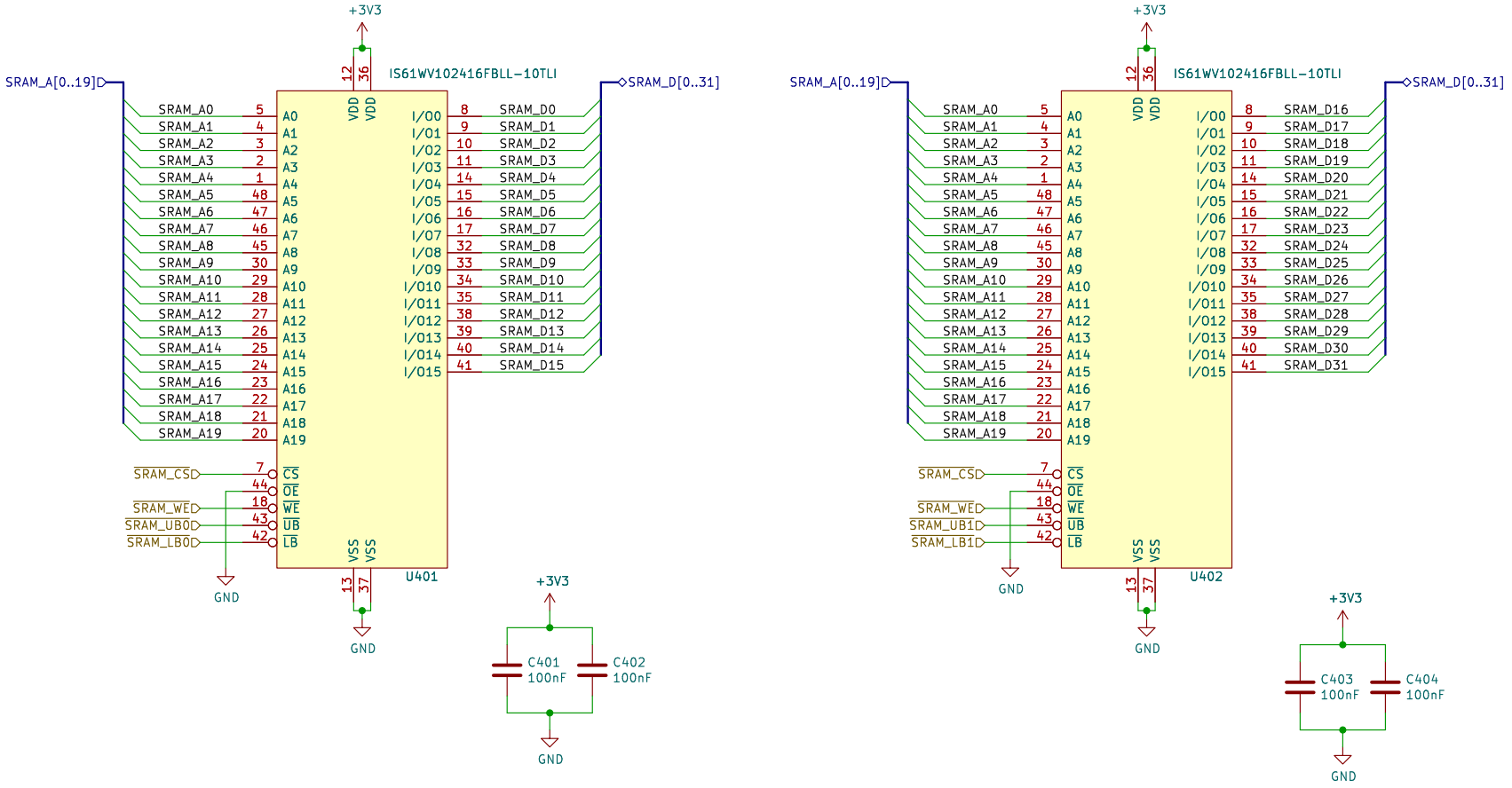

Sheet: /Memory/
File: Memory.kicad_sch

Title:

Size: A4	Date:	**Rev:**
KiCad E.D.A. 8.0.1		Id: 4/5

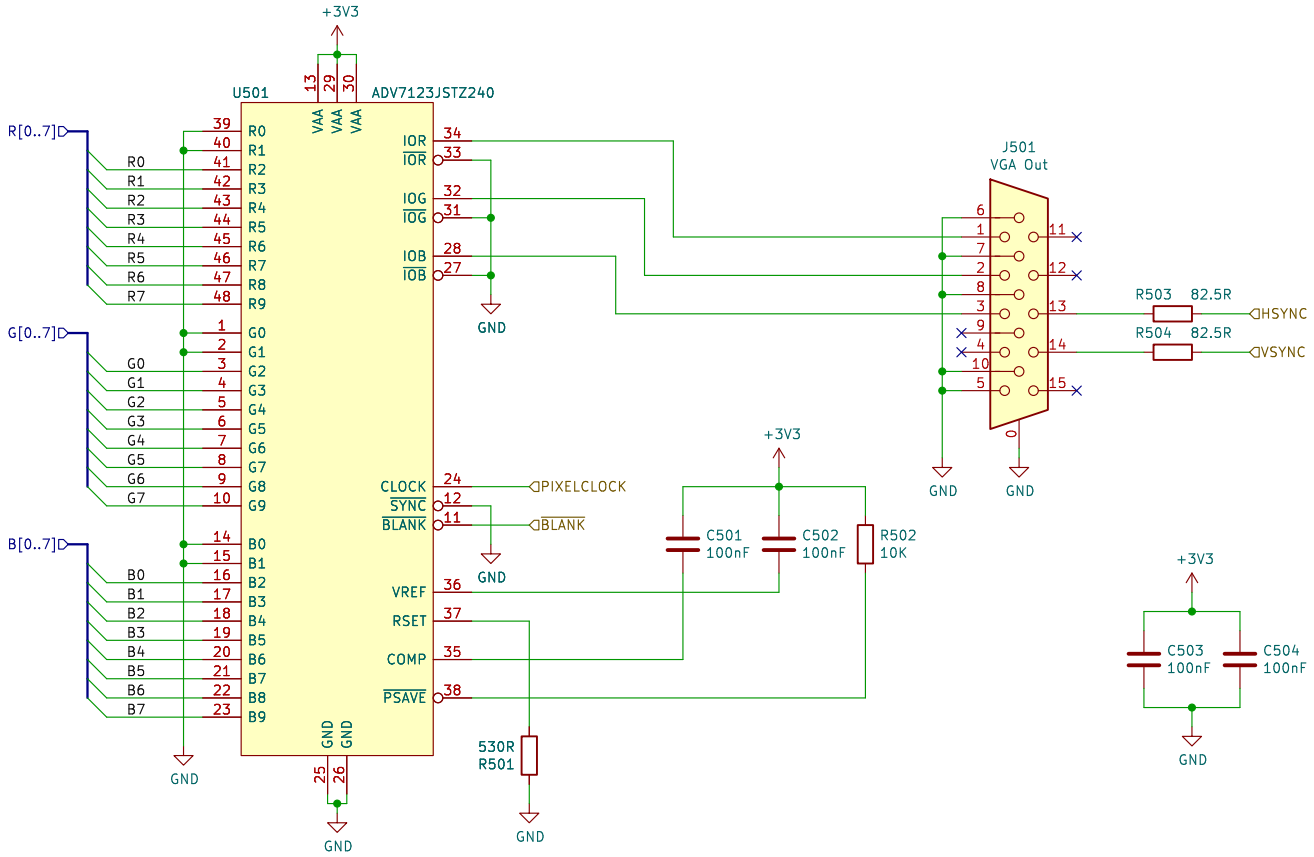

Sheet: /VGA/		
File: VGA.kicad_sch		
Title:		
Size: A4	Date:	**Rev:**
KiCad E.D.A. 8.0.1		Id: 5/5