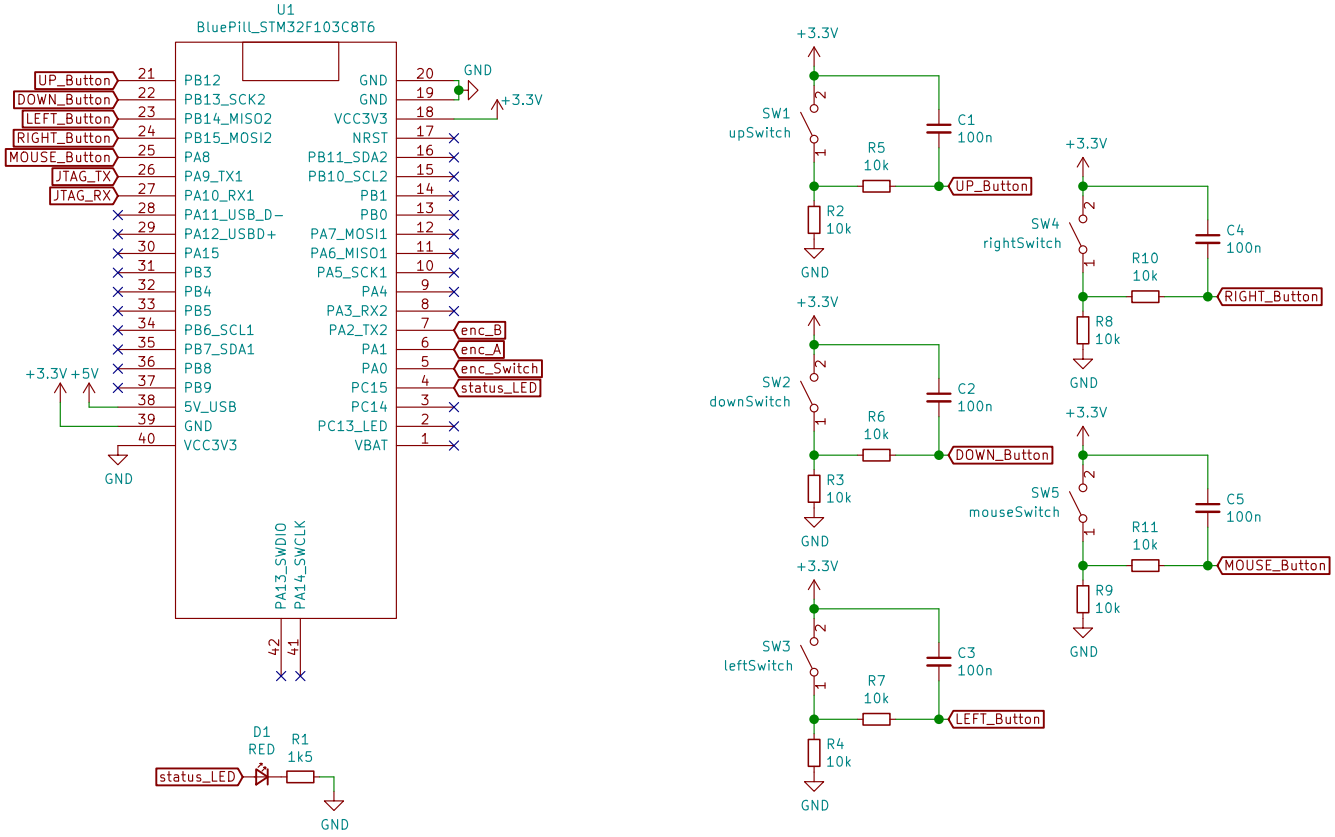

Switches – 01x02 Conncetor
Rottary Encoder + LED – 01x05 Connector

Daniel Duranovic
RiTeh

Sheet: /
File: Mouse_Emulator_V_2.sch

Title: HID Foot Mouse

Size: A4	Date: 2021-09-03	**Rev: v3**
KiCad E.D.A. eeschema (5.1.10)-1		Id: 1/1