RPM Control System using Electronic Speed Unit (ESU)

Bachelor of Technology In

ELECTRONICS AND COMMUNICATION ENGINEERING

By:

Srikaran Muluka 24BEC0682

Mudunuri Prajeet Varma 24BEC0059

Harika Donga 24BEC0487

Datta Divyesh Vedurumudi 24BEC0714

D.Methun 24BEC0508

Under the guidance of **Prof. Dr. Christina Josphine**

School Name: **SENSE**

VIT, Vellore.

VIT®

Vellore Institute of Technology

(Deemed to be University under section 3 of UGC Act, 1956)

DECLARATION

I hereby declare that the thesis entitled “ESU-Based RPM Controller" submitted by Srikaran Muluka, Mudunuri Prajeet Varma, Harika, D. Methun, Datta Divyesh Vedurumudi for the award of the degree of Bachelor of Technology in Electronics and Communication Engineering to VIT is a record of Bonafide work carried out by me under the supervision of Prof. Dr. Christina Josphine.

I further declare that the work reported in this thesis h as not been submitted previously to this institute or anywhere for the consideration of the degree/diploma.

Executive Summary

The project titled **"RPM Controller using ESU"** aims to design and implement a hardware-based control system to automatically regulate the speed of a **DC gear motor**. In many motor-driven systems, the speed of the motor varies with changes in load, friction, or supply voltage. To maintain steady performance, an Electronic Speed Unit (ESU) is employed to measure and control the motor's revolutions per minute (RPM).

The system uses an **Arduino Uno** microcontroller to continuously read the actual speed from a **Hall-effect sensor**, compare it with a reference RPM, and adjust the **PWM (Pulse Width Modulation)** signal sent to **the motor driver**. This ensures that the motor maintains constant speed despite load variations. The ESU acts as the main feedback and control interface, providing smooth and stable operation.

This project demonstrates how feedback control, embedded systems, and low-cost electronics can work together to achieve efficient speed regulation. The developed model has applications in **automated manufacturing lines, robotics, electric vehicles, and precision control systems**. By improving efficiency and reducing energy waste, it supports **Sustainable Development Goals (SDG 9 and SDG 12)** related to innovation and responsible energy consumption.

1. INTRODUCTION

Motor speed control is an essential part of modern engineering systems. From conveyor belts and robotic arms to electric vehicles and turbines, maintaining a constant speed ensures efficiency, accuracy, and product quality. In traditional systems, speed control is often manual or open-loop, meaning the user sets a speed without feedback — as a result, when the load changes, the motor slows down or speeds up unpredictably.

An **Electronic Speed Unit (ESU)** solves this issue by implementing a **closed-loop control system**. It constantly monitors the actual speed and automatically adjusts the input power to maintain the desired RPM. This principle is similar to how cruise control works in cars — maintaining constant speed even when road conditions change.

In this project, a **DC gear motor** is used because it provides high torque at low speeds, making it ideal for precise control applications. The **Arduino Uno** serves as the controller, processing sensor inputs and generating corrective PWM outputs. The final goal is to create a low-cost, accurate, and energy-efficient RPM control system suitable for both academic and practical use.

1.1 Literature review:

Previous studies on motor speed control have used various approaches:

1. PID Controllers: Commonly used in industrial systems for accuracy, but complex to tune and expensive for small-scale applications.
2. Microcontroller-Based Systems: Use feedback from tachometers or Hall sensors to generate PWM signals — efficient but often lack modularity.
3. Electronic Speed Units (ESUs): Introduced in vehicles and generators for real-time control; they are reliable but typically designed for high-power systems.
4. IoT-based RPM Monitors: Provide wireless monitoring but focus more on data visualization than active control.

This project bridges these approaches by combining a microcontroller-based feedback loop with an ESU concept for compact, low-cost, and efficient control of DC motors.

1.2 Research Gap:

Existing speed control systems often face the following challenges:

- They require complex calibration or tuning for different motors.
- Some systems lack real-time feedback, causing overshoot or instability.
- Industrial ESUs are expensive and bulky, making them unsuitable for educational or prototype use.

Hence, there is a need for a simpler, affordable, and easily implementable ESU-based RPM controller that provides reliable performance for small-scale applications.

1.3 Problem Statement:

To design and develop a compact, low-cost Electronic Speed Unit (ESU) system that can maintain a constant RPM for a DC gear motor using an Arduino Uno and feedback from a Hall-effect sensor, even under varying load conditions.

2. RESEARCH OBJECTIVE

The primary objective of this project is to design and develop an Electronic Speed Unit (ESU)-based RPM controller capable of maintaining a constant rotational speed of a DC gear motor using Arduino Uno.
The specific objectives are as follows:

1. **To design a compact and cost-effective RPM control system using ESU and Arduino Uno.**The goal is to create a hardware setup that is simple to build, affordable, and easy to replicate for academic and industrial applications. The system should be able to measure motor speed accurately and maintain it within the desired range.
2. **To develop a closed-loop feedback mechanism for accurate speed regulation.**
   A closed-loop system continuously monitors the motor's RPM using a feedback sensor (such as a Hall-effect sensor) and compares it with a reference value. If a difference is detected, the controller adjusts the PWM signal accordingly. This objective ensures precision and stability in speed control under different load conditions.
3. **To implement an intelligent control algorithm using Pulse Width Modulation (PWM).**
   PWM-based speed control allows smooth and efficient adjustment of motor speed by varying the width of voltage pulses. The objective here is to program the Arduino Uno to generate a dynamic PWM signal based on sensor feedback, enabling precise control of the DC motor.
4. **To test and analyze system performance under varying load and voltage conditions.**The designed system will be experimentally tested with different loads applied to the motor. Parameters such as response time, speed deviation, and steady-state error will be analyzed to evaluate performance and reliability.
5. **To ensure energy-efficient and reliable operation of the motor.**
   By maintaining constant RPM, the system minimizes power wastage and reduces

mechanical wear on the motor. This improves both energy efficiency and operational lifespan.

6. **To provide a flexible and scalable platform for future improvements.**
   The system design should allow future enhancements such as PID-based control, wireless monitoring, or adaptation to other types of motors (like BLDC or stepper motors) without major hardware changes.

3. Relevance to Sustainable Development Goals (SDG)

This project aligns with:

- **SDG 9 – Industry, Innovation, and Infrastructure:** by advancing efficient motor control systems for industrial automation.
- **SDG 12 – Responsible Consumption and Production:** by optimizing energy use and reducing unnecessary power consumption.
  Efficient RPM control leads to less wear, lower energy waste, and longer motor lifespan — contributing to sustainable engineering practices.

4. Proposed System

Block Diagram:

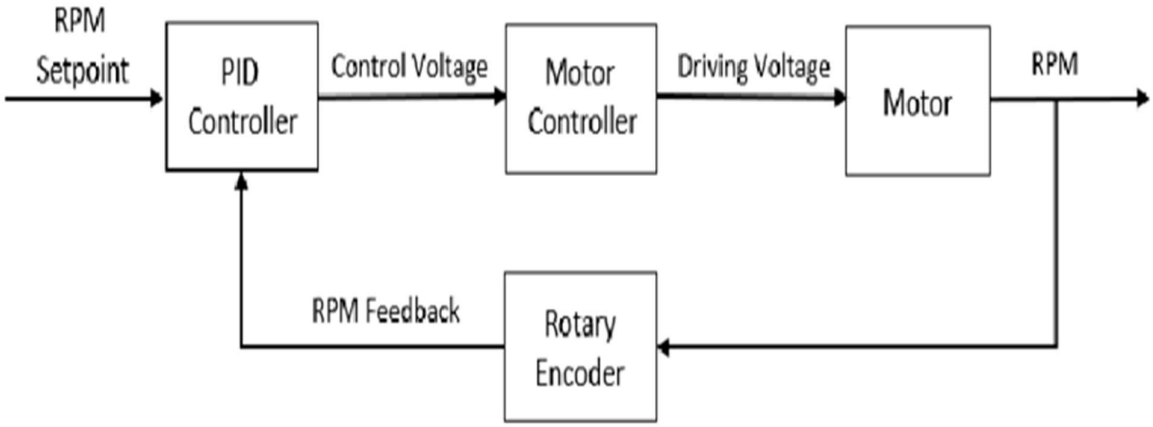

4.1 Design Approach / Methodology:

The proposed system works on a **closed-loop feedback control principle**, which means it continuously checks the motor's speed and automatically corrects it whenever there is a change.

1. **RPM Sensor (Hall-effect sensor):**
   The sensor is placed near the rotating part of the DC gear motor. Every time the motor shaft rotates, the sensor produces pulses. The number of pulses per second tells us how fast the motor is spinning, i.e., its RPM (revolutions per minute).

2. **Arduino Uno:**
   The Arduino acts as the brain of the system. It receives the RPM data from the sensor and compares it with the desired speed (the target RPM set by the user). If the motor is running too slow or too fast, Arduino calculates how much correction is needed.

3. **PWM DC Motor Control:**
   The Arduino then changes the **PWM (Pulse Width Modulation)** signal — a type of electronic control that adjusts how much power the motor gets. This PWM signal is sent to the **motor driver**, which actually supplies the controlled power to the motor. Increasing the pulse width makes the motor go faster, and decreasing it slows it down.

4. **Electronic Speed Unit (ESU):**
   The ESU acts as a stabilizer or fine-tuning module. It helps smooth out any sudden changes, filters unwanted noise from the signals, and ensures that the motor speed remains stable instead of oscillating up and down.

5. **Continuous Control Loop:**
   This entire process happens repeatedly and very quickly — many times per second. The system keeps checking the speed, correcting it, and updating the motor input. This allows the motor to maintain almost the same RPM even when the **load**, **friction**, or **supply voltage** changes.

4.2 Code:

```
#include <Servo.h>


const int hallSensorPin = A0; // Analog pin connected to HW-
477 sensor

const int brakePin = 9;       // PWM pin for servo motor
brake

const int thresholdRPM = 2000; // RPM threshold to apply
brake


Servo brakeServo;


unsigned long lastTime = 0;

unsigned int pulseCount = 0;

float currentRPM = 0;


const int interval = 1000; // Measurement interval in
milliseconds

bool brakeApplied = false;


void setup() {

  Serial.begin(9600);

  pinMode(hallSensorPin, INPUT);

  brakeServo.attach(brakePin);

  attachInterrupt(digitalPinToInterrupt(hallSensorPin),
countPulse, CHANGE);

  brakeServo.write(0); // Assume 0 is brake released

}
```

```
void loop() {
  static bool lastSensorState = false;
  int sensorValue = analogRead(hallSensorPin);
  bool currentSensorState = sensorValue > 512; // Threshold
for detection

  // Edge detection for pulse counting
  if (currentSensorState && !lastSensorState) {
    pulseCount++;
  }
  lastSensorState = currentSensorState;

  unsigned long currentTime = millis();
  if (currentTime - lastTime >= interval) {
    // Calculate RPM
    float revolutions = (float)pulseCount;
    currentRPM = (revolutions / (interval / 1000.0)) * 60.0;

    Serial.print("RPM: ");
    Serial.println(currentRPM);

    // Check if RPM exceeds threshold and apply or release
brake
    if (currentRPM >= thresholdRPM && !brakeApplied) {
      brakeServo.write(180); // Applying brake (depends on
servo, adjust accordingly)
      brakeApplied = true;
    } else if (currentRPM < thresholdRPM && brakeApplied) {
      brakeServo.write(0); // Releasing brake
      brakeApplied = false;
```

```
    }

    // Reset pulse count for next interval
    pulseCount = 0;
    lastTime = currentTime;
  }
}

void countPulse() {
  pulseCount++;
}
```

5. Project Description

- Design and implementation of a **closed-loop system** for **automatic RPM control** of a **DC gear motor**.
- System utilizes an **Arduino Uno** microcontroller for central processing.
- **Hall-effect sensor** provides continuous **actual RPM feedback**.
- Control loop compares feedback to a **reference speed** and adjusts **PWM output**.
- **Motor driver** interfaces the control signals with the higher motor current.
- **Electronic Speed Unit (ESU)** is included for **signal noise filtering** and **speed fluctuation reduction** to ensure stable control.
- Project involved successful **hardware assembly**, **control code programming**, and validation through **testing under different load conditions**.
- Performance evaluation confirmed the controller **effectively maintained nearly constant RPM** with **minimal error**.
- Final system demonstrates a **compact, low-cost, and energy-efficient** solution suitable for **automation, robotics, and automotive systems**.

6. Hardware and Software Tools used

1. Hardware:
    a. Arduino Uno Board
    b. 12V DC Motor
    c. DC Controller
    d. Magnet
    e. Hall Sensor
    f. Servo Motor
2. Software:
    a. Arduino IDE

7. Report Analysis

 Effective Speed Regulation: The controller successfully **maintained a nearly constant RPM** even when the load on the motor was varied. This confirms the effectiveness of the closed-loop feedback mechanism.

 High Accuracy and Minimal Error: The system exhibited **minimal error** between the reference (set) RPM and the actual measured RPM. The ESU's role in **filtering signal noise and reducing fluctuations** was crucial in achieving this high accuracy.

 Rapid Response and Stability: The system demonstrated a **quick response** to load changes. The Arduino rapidly adjusted the PWM signal to correct speed deviations, ensuring stable operation **without the significant overshoot or oscillation** common in open-loop systems.

8. Social and Environmental Impact

he **"RPM Controller using ESU"** project has several positive social and environmental impacts due to its focus on automation, energy efficiency, and sustainable operation.

1. **Reduction of Energy Waste:**
   The system is designed to maintain a constant motor speed automatically. By preventing unnecessary speed fluctuations, the motor consumes only the required amount of power. This minimizes energy losses and helps in efficient utilization of electrical energy, which is especially important in industrial and laboratory applications where multiple motors operate simultaneously.
2. **Improved Automation Efficiency:**
   In small- and medium-scale industries, most machines rely on precise motor speed for consistent product quality. The proposed ESU-based RPM controller enhances automation efficiency by ensuring smooth operation, reducing human intervention, and improving process reliability. This increases productivity while lowering maintenance requirements.
3. **Promotion of Low-Cost Embedded Control Systems:**
   The project demonstrates that advanced control systems can be built using affordable and easily available components like the Arduino Uno and Hall-effect sensors. This makes the technology accessible for students, researchers, and small industries, encouraging innovation and hands-on learning in the field of embedded systems and mechatronics.
4. **Encouragement of Sustainable Technology:**
   By maintaining constant speed and avoiding mechanical stress, the system extends the lifespan of motors and connected components. This reduces frequent replacements and electronic waste generation. Moreover, energy

9. Cost Analysis

Component	Estimated Cost (INR)
Arduino Uno Board	₹ 700
12V DC Gear Motor	₹ 350
PWM DC motor controller (DC Controller)	₹ 150
Hall-effect Sensor [cite: 159]	₹ 100

Component	Estimated Cost (INR)
Servo Motor (for braking) [cite: 160]	₹ 250
Magnet, Breadboard, & Wires	₹ 150
Total Estimated Cost	₹ 1,700

10. Conclusion

The **ESU-based RPM controller** successfully demonstrates precise speed regulation of a DC gear motor using Arduino Uno and Hall-effect feedback. The system ensures stability, quick response, and high accuracy under different operating conditions. Its modular design makes it suitable for both academic learning and industrial prototype applications. The achieved performance confirms that closed-loop control systems are efficient, low-cost, and reliable solutions for modern automation challenges.

Future Work:

- Integration of wireless communication (Bluetooth/Wi-Fi) for remote speed monitoring.
- Implementation of PID control algorithm for improved accuracy.
- Expansion to multi-motor synchronization for robotic and conveyor systems.
- Miniaturization of the ESU module for embedded applications.