255

DENON

Hi-Fi Component

SERVICE MANUAL

STEREO CD PLAYER

MODEL DCD-3560

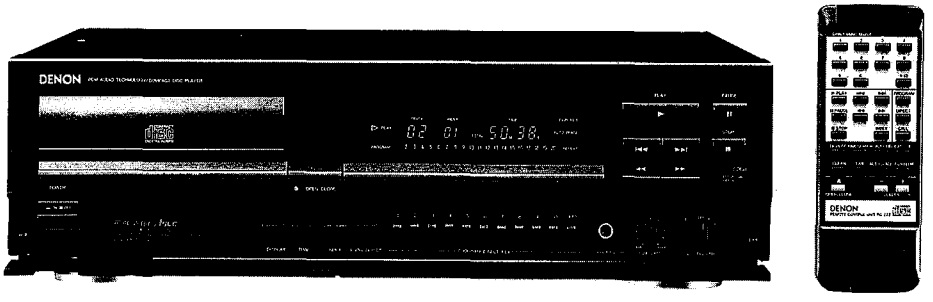

TABLE OF CONTENTS

OPERATING INSTRUCTIONS ..... 2 ~ 13
NOTE FOR HANDLING OF LASER PICK-UP 14, 15
DISASSEMBLY 16, 17
MECHANISM UNIT ADJUSTMENT 18
ADJUSTMENT ..... 19 ~ 26
IC TERMINAL FUNCTION LIST ..... 26 ~ 31
PARTS LIST OF P.W.BOARD ..... 32 ~ 35
PARTS LIST OF EXPLODED VIEW 36
EXPLODED VIEW 37
EXPLODED VIEW OF FG-621 MECHANISM UNIT 38
PARTS LIST OF FG-621 MECHANISM UNIT 38
P.W.BOARD ..... 39 ~ 41
WIRING DIAGRAM 42
SEMICONDUCTORS 43, 44
SCHEMATIC DIAGRAM 45, 46

NIPPON COLUMBIA CO., LTD.

IMPORTANT TO SAFETY

WARNING:

TO PREVENT FIRE OR SHOCK HAZARD, DO NOT EXPOSE THIS APPLIANCE TO RAIN OR MOISTURE.

CAUTION:

1. **Handle the power supply cord carefully**
   Do not damage or deform the power supply cord. If it is damaged or deformed, it may cause electric shock or malfunction when used. When removing it from wall outlet, be sure to remove by holding the plug attachment and not by pulling the cord.
2. **Do not open the top cover**
   In order to prevent electric shock, do not open the top cover. If problems occur, contact your DENON DEALER.
3. **Do not place anything inside**
   Do not place metal objects or spill liquid inside the CD player. Electric shock or malfunction may result.

Please, record and retain the Model name and serial number of your set shown on the rating label.
Model No. DCD-3560 Serial No. _____

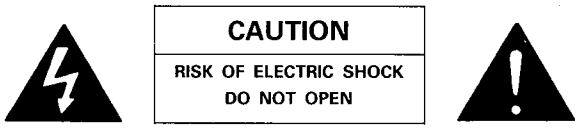

CAUTION: TO REDUCE THE RISK OF ELECTRIC SHOCK, DO NOT REMOVE COVER (OR BACK). NO USER SERVICEABLE PARTS INSIDE. REFER SERVICING TO QUALIFIED SERVICE PERSONNEL.

The lightning flash with arrowhead symbol within an equilateral triangle is intended to alert the user of the presence of uninsulated "dangerous voltage" within the product's enclosure that may be of sufficient magnitude to constitute a risk of electric shock to persons.

The exclamation point within an equilateral triangle is intended to alert the user of the presence of important operating and maintenance (servicing) instruction in the literature accompanying the appliance.

IMPORTANT (BRITISH MODEL ONLY)

The wires in this mains lead are coloured in accordance with the following code:

Blue: Neutral Brown: Live

The colours of the wires in the mains lead of this apparatus may not correspond with the coloured markings identifying the terminals in your plug proceed as follows.
The wire which is coloured blue must be connected to the terminal which is marked with the letter N or coloured black.
The wire which is coloured brown must be connected to the terminal which is marked with the letter L or coloured red.

NOTE:
This CD player uses the semiconductor laser. To allow you to enjoy music at a stable operation, it is recommended to use this in a room of 5°C (41°F) – 35°C (95°F).

LABELS (for U.S.A. model only)

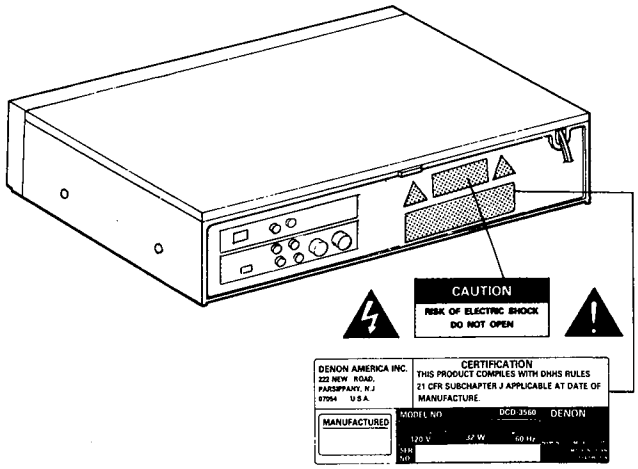

CAUTION:
USE OF CONTROLS OR ADJUSTMENTS OR REFORMANCE OF PROCEDURES OTHER THAN THOSE SPECIFIED HEREIN MAY RESULT IN HAZARDOUS RADIATION EXPOSURE.

THE COMPACT DISC PLAYER SHOULD NOT BE ADJUSTED OR REPAIRED BY ANYONE EXCEPT PROPERLY QUALIFIED SERVICE PERSONNEL.

NOTE:
This unit may cause interference to radio and television reception if you do not operate it in strict accordance with this OPERATING INSTRUCTIONS.

This unit complies with Class B computing device rules in accordance with the specifications in Sub-part J or Part 15 of the FCC Rules, which are designed to provide reasonable protection against such interference in a residential installation. If the unit does cause interference to any radio or television reception, try to reduce it by one or more of the following means:
a) Turn the other unit to improve reception
b) Move this unit
c) Move this unit away from others
d) Plug this unit respectively into a different AC outlet

*** This is note in accordance with Section 15.838 of the FCC Rules.**

Thank you for purchasing this DENON Compact Disc Player. Please read the operating instructions thoroughly in order to acquaint yourself with the CD player and achieve maximum satisfaction from it.

— TABLE OF CONTENTS —

FEATURES 3
NAMES AND FUNCTIONS OF PARTS ..... 4 ~ 5
BEFORE USE 6
CONNECTION 6
OPENING AND CLOSING THE DISC HOLDER AND LOADING A DISC 7
NORMAL CD PLAYBACK 7
ADVANCED CD PLAYBACK ..... 7 ~ 10
TIMER-CONTROLLED PLAYBACK 10
THE COMPACT DISC 11
INSTALLATION PRECAUTIONS 11
PLAYBACK USING THE REMOTE CONTROL UNIT ..... 11 ~ 12
TROUBLESHOOTING 13
SPECIFICATIONS 13

Please check to make sure the following items are included with the main unit in the carton:

(1) Operating Instructions 1
(2) LC-OFC class 1 Audio Pincord 2
(3) Remote Control Unit RC-222 1
(4) Dry Cell Battery R03/AAA 2
(5) Mini Screw Driver 1

VAROITUS: **SUOJAKOTELOA EI SAA AVATA. LAITE SISÄLTÄÄ LASERDIODIN, JOKA LÄHETTÄÄ NÄKYMÄTÖNTÄ SILMILLE VAARALLISTA LASERSÄTEILYÄ.**

ADVARSEL: **USYNLIG LASERSTRÅLING VED ÅBNING NÅR SIKKERHEDSAFBRYDERE ER UDE AF FUNKTION. UNDGÅ UDSAETTELSE FOR STRÅLING.**

VARNING: **OSYNLIG LASERSTRÅLNING VID AVLÄGSNANDE AV APPARATENS HÖLJE. UNDVIK EXPONERING AV LASERSTRÅLNING.**

"CLASS 1 LASER PRODUCT"

FEATURES

The DCD-3560 Compact Disc Player incorporates DENON's Super Linear Converter which prevents deterioration of sound quality in PCM playback systems. This assures accurate reproduction of the digital signals recorded on compact discs no matter whether they are pure studio recordings or "live" performance recordings. All parts making up this CD player have been selected with the greatest care in order to produce high quality realistic playback of the full musical content on compact discs.

(1) Real 20-bit ΛS.L.C. (Super Linear Converter)
The use of DENON's unique system for preventing zero cross distortion, the main factor in loss of sound quality in the PCM playback section, plus real 20-bit D/A converters with superior resolution, offers reproduction of the original sound field with rich musical expression.

(2) High performance digital filter
A high precision digital filter with 8 times oversampling bring out the best of the analog filter to produce crisp, clear sound.

(3) Thorough Anti-Vibration Structure
The optical pickup, which requires extremely high tracing precision, is installed on a BMC (Bulk Mold Compound) with high internal loss and excellent vibration absorption, and the interior of the optical pickup mechanism is also floated using rubber with low repellence elasticity and coil springs.
The entire mechanism is installed on a BMC chassis giving it a thorough anti-vibration structure.

(4) Exclusive Audio Power Transformers
In addition to the power transformer for the digital servo circuit, the independent transformer is used exclusively for the audio circuitry, combining with the high capacity power capacitor to provide stability.

(5) Audio Output System with Balanced Outputs
The DCD-3560 is equipped with balanced cannon connector outputs. There are total of three output systems, two fixed output systems (one unbalanced and one balanced) and one unbalanced variable output system, thus providing more than sufficient options even for professional use.

(6) Digital Outputs, Including an Optical Output
The data on the compact disc can be output in digital format to an external digital processor or D/A unit for playback.
Aside from the two coaxial output systems, the DCD-3560 also includes an optical output which improves sound quality and eliminates noise interference.

(7) Simple Design
The DCD-3560 has a simple, high quality design, with functions not often used tucked behind a door or on the remote control unit.

(8) Quick Time Search Function
The time search function makes it possible to indicate a point from the beginning of a track in units of seconds, making for simple use for reference or professional purposes.

(9) Original Linear Motor
A linear motor with smooth, rapid operation greatly reduces access time and improves tracking resolution for greatly fidelity in playback.

(10) Wireless Remote Control
Aside from the regular functions such as play, stop, and track buttons, the remote control unit also includes a numeric keypad for the direct search, direct program, and time search functions.
These remote control functions greatly enhance the operability of the DCD-3560.

NAMES AND FUNCTIONS OF PARTS

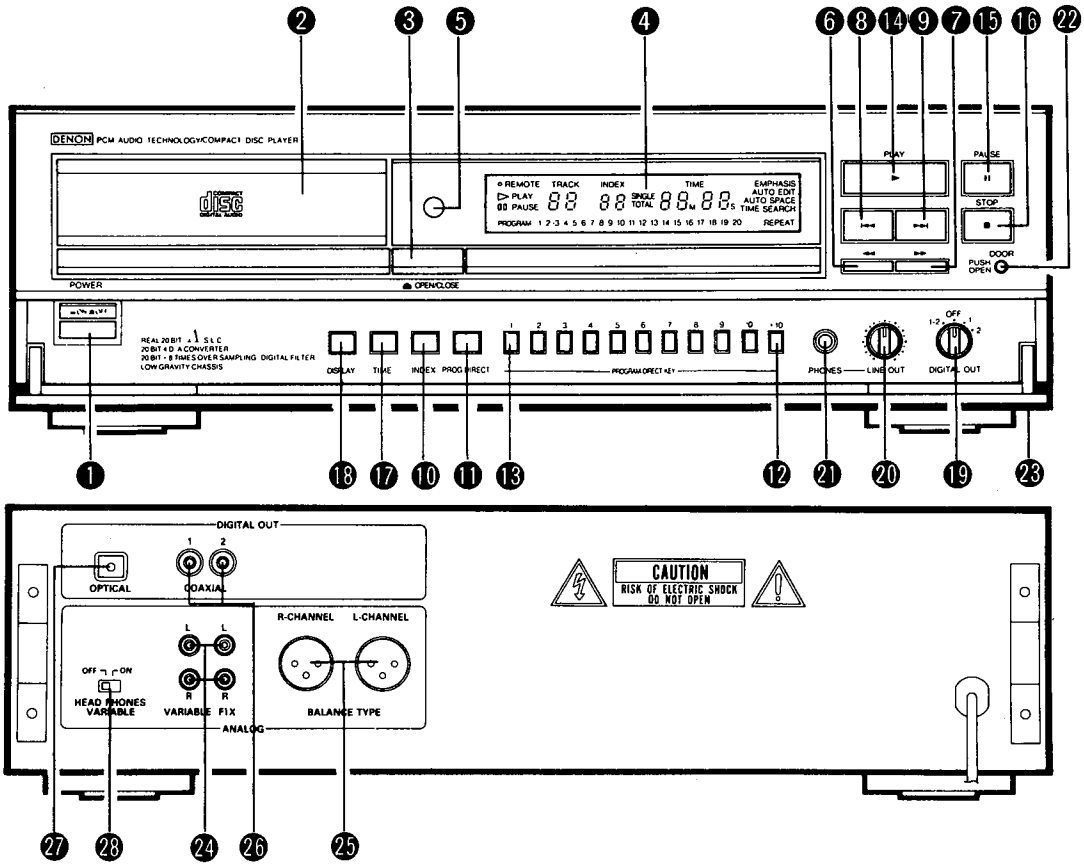

❶ Power Switch (POWER)

- When the power is turned on, "(00)" appears in the second portion of the TIME display, and if no disc is loaded, "(00ss0000)" appears in the digital display and the calendar lights.
- If the power is turned on with a disc already loaded, the total number of tracks on the disc is displayed in the TRACK NO. display, the total time is displayed in the TIME display, and the numbers of the music calendar light up to the number of tracks on the disc, and playback begins automatically.

❷ Disc Holder

- Place the disc on the disc holder with the label facing up.
- Use the open/close button (⏏ OPEN/CLOSE) ❸ to open and close the disc holder.
- Press the play button (▶ PLAY), pause button (⏸ PAUSE), a number button, or the disc holder directly to close it.

❸ Open/Close Button (⏏ OPEN/CLOSE)

- The disc holder is opened and closed by pressing this button.
- Press this button once to open the disc holder, and once again to close it.
- When the disc holder is closed with a disc loaded, the disc will rotate for a couple of seconds while the disc contents are read. The number of tracks and total playback time on the disc are then displayed on the digital display ❹.

❹ Display

- The digital display is divided into sections, displays for track number, index, playback time and calendar, as shown below.

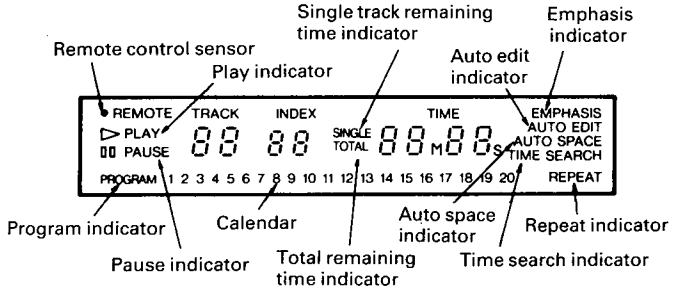

❺ Remote Control Sensor

- This sensor receives the infrared light transmitted from the wireless remote control unit.
- For remote control, point the supplied remote control unit RC-222 towards this sensor.
- When a signal is transmitted from the remote control unit, the remote control indicator in the display ❹ will light up briefly.

❻ Manual Search Reverse Button (◀◀)

- Press this button during playback for fast reverse search. As long as the button is kept pressed, music signals are played back faster than normal.
- Pressing this button when the pause mode is engaged, you can quickly reverse the pickup to a desired position, three times faster compared to manual reverse search during playback. During this time, no sound is heard.

❼ Manual Search Forward Button (▶▶)

- Press this button during playback for fast forward search. As long as the button is kept pressed, music signals are played back faster than normal.
- Pressing this button when the pause mode is engaged, you can quickly forward the pickup to a desired position, three times faster compared to manual forward search during playback. During this time, no sound is heard.

❽ Automatic Search Reverse Button (⏮)

- Press this button to return the pickup to the beginning of the present track. Press again to return to other tracks.
- By pressing the button a number of times, the pickup will move back to the corresponding number of tracks.

❾ Automatic Search Forward Button (⏭)

- Press this button to move the pickup forward to the beginning of the next track. Press again to move ahead to other tracks.
- By pressing the button a number of times, the pickup will advance to the corresponding number of tracks.

❿ Index Button (INDEX)

- Press this button to start playback from an index within a track. Use the number buttons ⓭ to specify the index number.

⓫ Program/Direct Button (PROG/DIRECT)
- Press this button when you want to enter tracks for programmed playback. (Refer to page 8 for details.)

⓬ +10 Button (+10)
- Press this button first when selecting track numbers over 10. Use it together with the number buttons. For example, to select track number 15, press [+10] then [5].
  For track number 33, press [+10] three times, then press [3].

⓭ Number Buttons (1, 2, 3, 4, 5, 6, 7, 8, 9 and 0)
- Use these buttons for the direct search, time search and program memory functions.
  For direct search, press for example button [3] if you want to hear track number 3. For track number 12, press [+10] then [2].
  To program tracks, press the PROG/DIRECT button to set the CD PLAYER into program mode.

⓮ Play Button (▶ PLAY)
- Press this button to start playback of a disc.
- When this button is pressed, [▶ PLAY] is displayed, and the track number being played is displayed together with the elapsed playback time of the track.
- Tracks are shown on the calendar display. Once a track has been played, the corresponding track number goes out on the calendar display.
- With the time search function, playback can be started from specified point on the disc.

⓯ Pause Button (II PAUSE)
- Press this button to stop playback temporarily.
- If this button is pressed during playback, playback is stopped temporarily, the [▶ PLAY] indicator goes out and the [II PAUSE] indicator lights.
- Press this button or the play button (▶ PLAY) again to continue playback.

⓰ Stop Button (■ STOP)
- Press this button to stop playback.
  The disc will stop rotating, and the number of tracks and total playing time of the disc are displayed in the TRACK NO. and TIME displays, respectively.
- In case programmed playback is engaged when this button is pressed, the number of tracks and total playing time of the program are displayed.

⓱ Time Mode Button (TIME)
- This button is used to select the desired indication in the TIME display. The indication of the display will change each time the button is pressed.
  Normally, the elapsed playback time of the current track is displayed.
  Pressing the button once, [SINGLE] is displayed and the remaining time of the current track is displayed.
  Pressing once more, [TOTAL] is displayed, and total playing time of remaining tracks is displayed. However, when programmed play is in progress, the total remaining time of the program is displayed.
  Press the button once again to return to the normal display of the elapsed playback time of the current track.

⓲ Display Button (DISPLAY)
- Press this button to change the brightness of the display.
- Press once to make the display 2/3 as bright as normal.
- Press once again to make the display 1/3 as bright as normal.
- Press again to turn the entire display off during playback and all but the track number off in any other mode.

⓳ Digital Output Switch (DIGITAL OUTPUT)
- Use this switch to turn the signals from the digital output terminals (DIGITAL OUTPUT) on and off.
- When off, no digital signals are present on the output.

⓴ Volume Control (LINE OUT)
- Use this to adjust the output level (volume) of the headphones or the line output (VARIABLE).
- The same operation is possible using the included remote control unit (RC-222).

㉑ Headphones Jack (PHONES)
- For private listening, you can connect your headphones to this jack (PHONES). Do not raise the volume level too much when listening through headphones. (Headphones are sold separately.)

㉒ Door Open Knob
- Press to open the door.

㉓ Trap Door
- Opens by pressing the door open knob. To close, press the right side of the door gently.

㉔ Output Terminal (FIX-VARIABLE)
- Connect these jacks to the input jacks on your amplifier. (Refer to page 6 for details on the connections.)

㉕ Output Terminals (BALANCED TYPE)
- These cannon type connectors are balanced outputs with an output impedance of 600Ω. Connect them to the balanced input terminals on the amplifier.
- Cannon connector signal layout
  (Rear output terminals ... see Page 4-㉕)

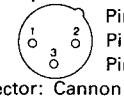

  Pin 1 – common
  Pin 2 – cold
  Pin 3 – hot
- Connector: Cannon type XLR-3-32

NOTE: Do not short-circuit the hot or cold pin with the common pin.

㉖ Digital Output Terminals (COAXIAL-1, COAXIAL-2)
- These terminals supply digital data.
- Use the included RCA pin cords or 75Ω pin cords (available in stores) for connecting.

㉗ Digital Output Terminal (OPTICAL)
- This terminal outputs digital data optically.
- Signals are output when the (DIGITAL OUT) switch is at the 1, 2, or 1+2 positions.

㉘ Headphone/Variable Output On/Off Switch
- Used to switch the signal of the headphone output jack and the variable output jack on and off.
- In the off position the signal is not output to the headphone output jack or the variable output jack.

Continuous Button Operation
If the automatic search reverse button ❽, the automatic search forward button ❾, or the +10 button ⓬ are held in, the function of that button will be repeated.

BEFORE USE — Be sure to release the shipping lock.

- Remove the two shipping cushions inserted in the trap door.
- **"Shipping lock"**
  The shipping lock keeps the laser pickup inside the player from moving during shipment.
- **When using the player**
  Before turning the power on, set the player so that the front panel is facing up, insert the included mini screwdriver into the shipping lock, then turn it counterclockwise until it stops. (APPROXIMATELY 1/2 TURN).
  Do not use any tool other than the included mini screwdriver.
  Remove the two shipping cushions inserted in the trap door.

- **Reshipping**
  (1) Turn the power on, open the disc holder, check that no disc is loaded, then close the disc holder.
  (2) Turn the power off, set the player so that front panel is facing up, then turn the shipping lock clockwise until it stops. (APPROXIMATELY 1/2 TURN)

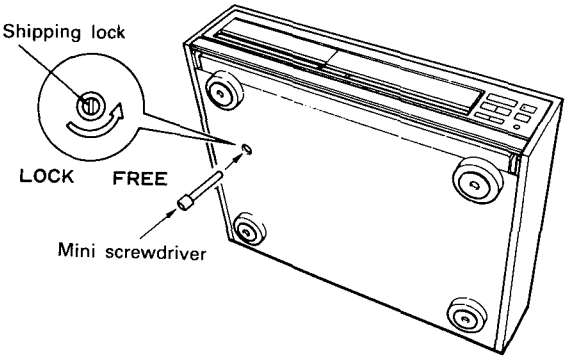

CAUTION
Be sure to release the shipping lock on the bottom panel before turning the power on.
When locking or freeing the shipping lock, be sure to set the player with the front panel facing up, the back panel facing down. (Refer to the diagram)

CONNECTION

(1) Connecting the Output Terminals (FIX-VARIABLE)
Connect the left (L) and right (R) output terminals to the left (L) and right (R) (CD), (AUX), or (TAPE PLAY) input terminals on the amplifier using the included pin cords.
There are two types of output terminals, one variable, the other fixed. To vary the output level, use the variable output terminals.

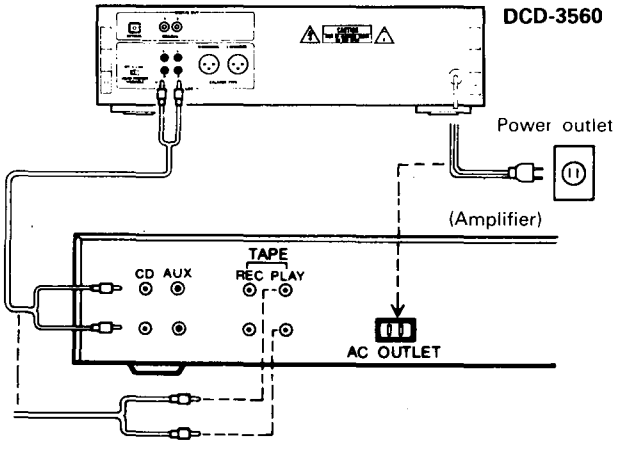

(2) Connecting the Output Terminals (BALANCED TYPE)
Connect the left (L) and right (R) balanced output terminals to the left (L) and right (R) balanced inputs on the amplifier using 3-pin cords.

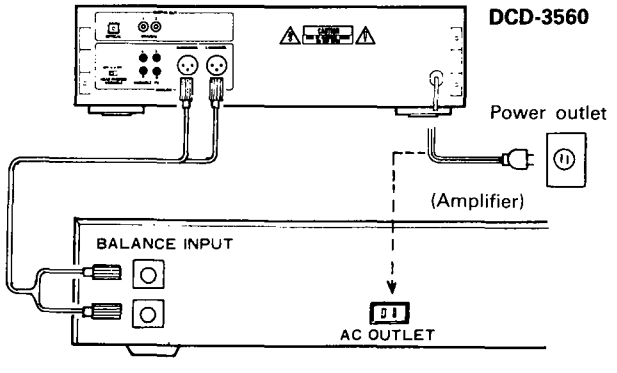

(3) Connecting the Digital Output Terminals (DIGITAL OUT)
Connect the (COAXIAL-1) or (COAXIAL-2) digital output terminals to the coaxial digital input terminals on a digital processor or D/A unit using 75Ω pin cords.
In the same way, connect the (OPTICAL) output terminal with the optical input terminal on a digital processor or D/A unit using an optical fiber cord.

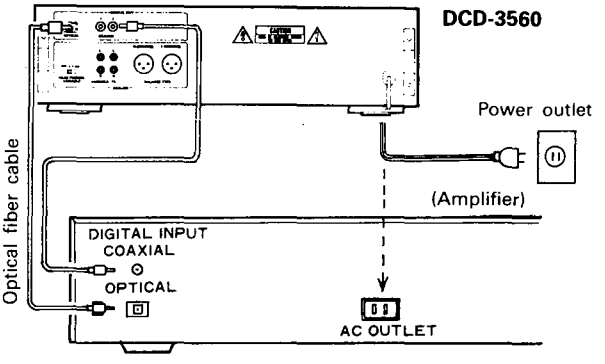

Connection Precautions
- Turn the power for all equipment off when connecting or disconnecting the connecting cords.
- Be sure to connect the left (L) and right (R) sides of the cords correctly.
- Connect to the amplifier's (CD), (AUX), or (TAPE PLAY) terminals.
- Note that not plugging the pin cords in securely could result in poor connections.

OPENING AND CLOSING THE DISC HOLDER AND LOADING A DISC

Opening and closing the disc holder (This operation only works while the power is on.)

1. Press the power switch (POWER) to turn on the power.
2. Press the open/close button (≜ OPEN/CLOSE).

How to load a disc

- Make sure the disc holder is completely open.
- Hold the disc by the edges and place it on the disc tray. (Do not touch the signal surface, i.e., the glossy side.)
- When using 12 cm. diameter discs, make sure the outer edge matches the tray guide circumference (Fig. 1), and when using CD singles (8 cm. diameter) match the outer edge with the inner tray guide circumference. (Fig. 2)
- Press the open/close button (≜ OPEN/CLOSE) to close the disc holder.
- When the disc is loaded, the total number of tracks is indicated in the TRACK display, the total time is indicated in the TIME display, and the numbers in the calendar light up to the total number of tracks.
- When the disc holder is open and a disc is loaded, you may also press the play (▶ PLAY) or pause (II PAUSE) button to close the disc holder. (If the play button (▶ PLAY) is pressed, playback will start immediately upon the disc contents having been read.)

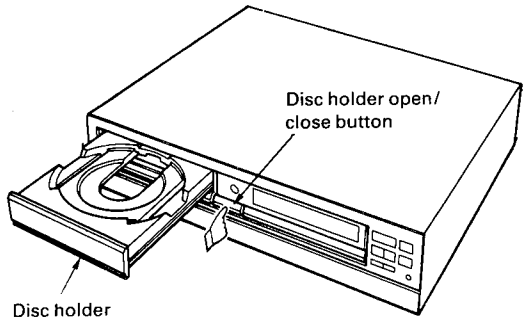

Fig. 1

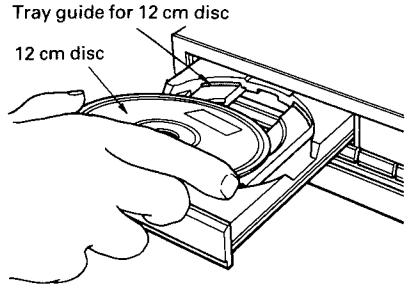

Fig. 2

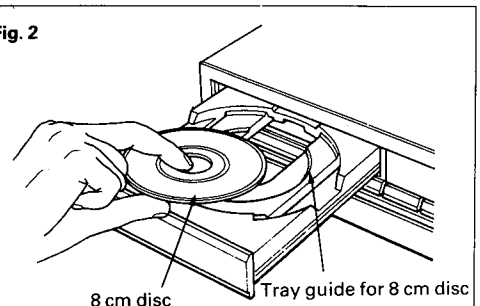

Caution:

- If your finger should get caught in the disc holder when it closes, press the open/close button (≜ OPEN/CLOSE).
- Do not place any foreign objects on the disc tray, and do not place more than one disc on the tray at a time. Otherwise malfunction may occur.
- Do not push in the disc tray manually when the power is off as this may cause a malfunction and damage the CD player.

NORMAL CD PLAYBACK

(1) Starting Playback

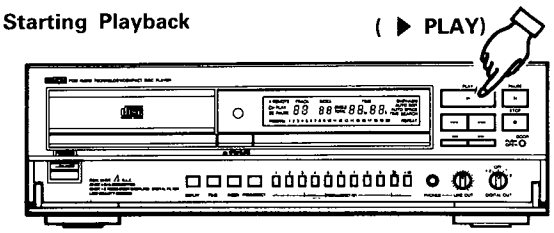

1 Press the power switch (POWER) to turn on the power.
2 Load the disc you want to play.
- When the disc holder is closed, the disc is read and the number of tracks and total playing time of the disc are displayed.

3 Press the play button (▶ PLAY).

(2) Stopping Playback

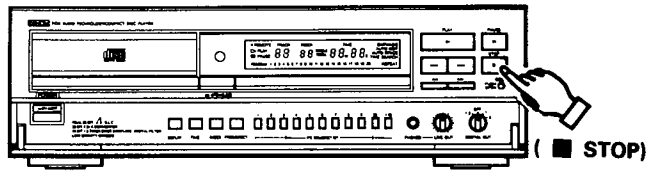

1 Press the stop button (■ STOP).
- When all tracks have been played on a disc, playback will stop by itself.

NOTE:

- If no disc is loaded or if the disc is loaded upside*down, "00" appears on the TRACK display, then the entire display window changes to "00000000"

- If the data at the innermost section of the disc cannot be read properly due to scratches, dirt, etc., the display window will be as shown below. If this happens, the search operation may take more time than usual.

Normal | Data cannot be read properly

ADVANCED CD PLAYBACK

❶ **Playing a Specific Track Direct Search** ..... **Number buttons**

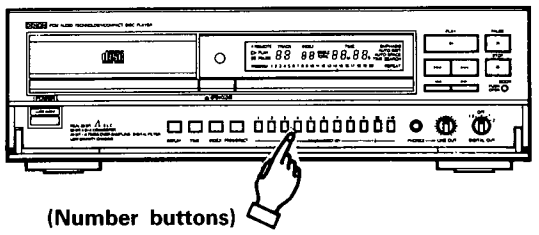

- Use the number buttons and the +10 button to input the number of the desired track.
  For example, to play track number 4, press [4], and to play track number 12, press [+10] and [2]. Playback will begin from that track.

❷ **Advancing to the next track during playback** ..... **Automatic Search**

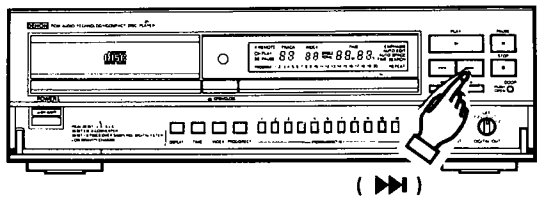

Press the Automatic search forward button (▶▶I) during playback.

- The pickup will advance to the beginning of the next track and playback will continue. Pressing the button several times will forward the pickup to the corresponding number tracks.

❸ Returning to the beginning of the current track during playback ..... Automatic Search

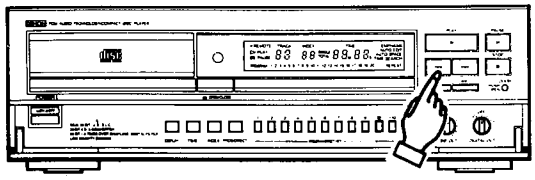

(⏮)

Press the Automatic search reverse button (⏮) during playback.

- The pickup will return to the beginning of the current track and playback will continue. Pressing the button several times will return the pickup the corresponding number tracks.

❹ Audible quick search ..... Manual Search

- Using this function, you can cue to a desired point within a track, either in the forward or reverse direction.
- Release the manual search button (◀◀ or ▶▶) when the desired point has been reached. Normal playback then continues.

(1) Manual Search Forward

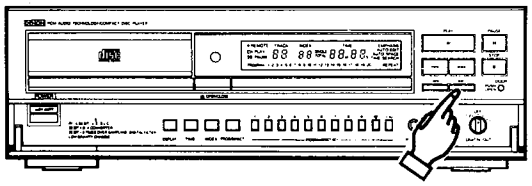

(▶▶)

1. Press the manual search forward button (▶▶) during playback. Playback of the track is sped up.

- As a reference, the current track number and elapsed playback time within the track are displayed.
- Manual search forward is approximately three times faster when engaged during the pause state compared to playback. However, in this case, no sound is heard.
- If the manual search forward button (▶▶) is kept pressed after the end of the final track on the disc is reached, (𝐽𝐽) is displayed and manual search stops. To return to another point, press the manual search reverse button (◀◀) until (𝐽𝐽) disappears.

(2) Manual Search in Reverse

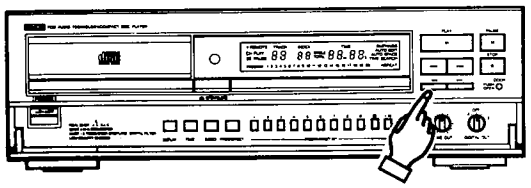

(◀◀)

1. Press the manual search reverse button (◀◀) during playback. Reverse playback of the track is sped up.

- As a reference, the current track number and elapsed playback time within the track are displayed.
- Manual search in reverse is approximately three times faster when engaged during the pause state compared to playback. However, in this case, no sound is heard.
- If the manual search reverse button (◀◀) is kept pressed after the beginning of the first track on the disc is reached, (𝐶𝐶) is displayed and manual search stops. To return to another point, press the manual search forward button (▶▶) until (𝐶𝐶) disappears.

❺ Playing Specific Tracks in a Specific Order ..... Programmed Play

- With this function, you can choose any of the tracks on the disc and program them to play in any order.
- Programming is possible with the disc holder open.
- Up to 20 tracks can be programmed.
- The programmed tracks are shown on the calendar.

(1) Programming

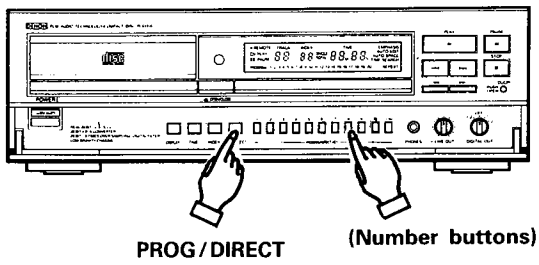

PROG/DIRECT (Number buttons)

- Press the PROG/DIRECT button so that the PROGRAM indicator lights, then use the number buttons and the +10 button to program the tracks.
  For example, to program tracks 3, 12, and 7, press PROG/DIRECT, 3, +10, 2, and 7.
  The corresponding track number lights on the calendar each time a track is programmed, the track number is displayed in the TRACK NO. display, the number of tracks programmed is displayed in the INDEX display, and the total playing time of the programmed tracks is displayed in the TIME display. A few seconds after the last track has been programmed, the total number of tracks programmed is displayed in the TRACK NO. display and the total playing time of the programmed tracks is displayed in the TIME display.
- The program will remain in the memory for approximately 2 days, even if the power is turned off after setting the program or during program playback.

NOTE:

- Leave the power on for at least 10 minutes to fully charge the memory power supply. If the power is only left on a short while, the memory will be cleared that much sooner.
- It is not possible to program more than 20 tracks.
- The remaining time per track will only be displayed for the first 20 tracks on the disc.
- The total programmed time and the remaining time for the program will also not be displayed if track number 21 or greater is programmed.

(2) Checking Programmed Tracks

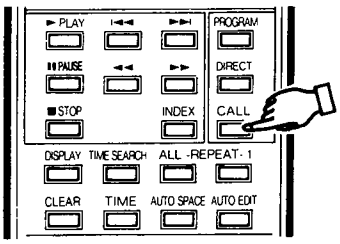

Remote control unit (CALL)

- Press the CALL button.
  The programmed tracks are displayed in order in the TRACK NO. display each time the CALL button is pressed.

(3) Correcting Programs

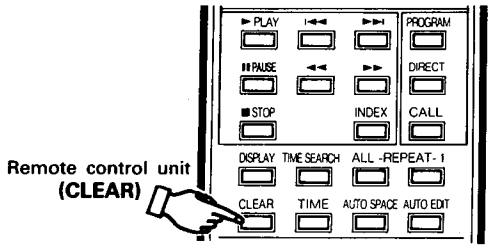

- To correct a programmed track, press the CLEAR button, then program the correct track. The last programmed track will be cleared and the correct track will take its place.
- To erase a programmed track, recall it with the CALL button, then press the CLEAR button and the STOP button, in that order. The track will be erased.

(4) Playing the Programmed Tracks

- Press the (▶ PLAY) button to play the tracks in the programmed order.

(5) Clearing the Program

- The entire program is cleared when the PROG/DIRECT button is pressed again. The program is also cleared when the (⏏ OPEN/CLOSE) button is pressed.
- If the PROG/DIRECT button is pressed during programmed play, the program is cleared and playback continues normally through to the last track on the disc.

NOTES

- If programming is done in the play or pause mode, the track currently playing is programmed at the first position. Other tracks can be added to the program, but the number of programmed tracks and the playing time will not be displayed.
- Direct search is not possible during programmed play. If the number buttons are pressed, that track is added to the end of the program.
- Programming is possible with the disc holder open. Track numbers greater than the number of tracks recorded on the disc can be programmed, but will be automatically cleared before playback begins.

❻ Pausing playback at any point ..... Pause

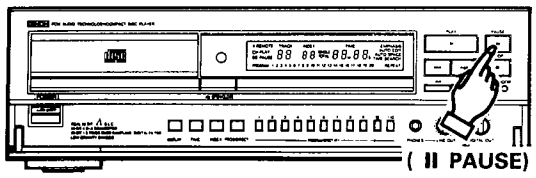

- Playback can be temporarily halted and then continued from the same point in the track.

1. Press the pause button (II PAUSE) during playback.
2. To continue playback, press the play button (▶ PLAY) or the pause button (II PAUSE) once more.

❼ Searching and Pausing at the Beginning of the Track ..... Pause

(1) With Direct Search

- In this case, the set pauses at the beginning of the track found with the direct search operation.

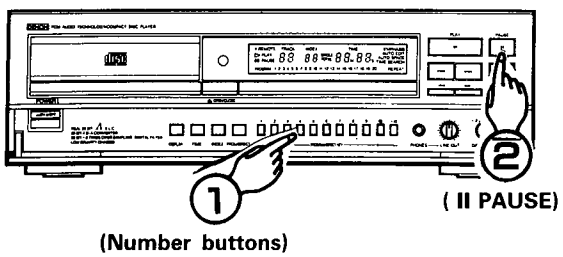

1. Press the (II PAUSE) button.
2. Press the number button(s) for the desired track.

- To start playback, press the (▶ PLAY) or (II PAUSE) button.

(2) With Program Search

- Press the (II PAUSE) button after the program search operation is completed. The set will pause at the beginning of the first programmed track.

❽ Finding Sections Within a Track ..... Index Search

- With this function, you can find and play from the beginning of sections within the track marked by index numbers.

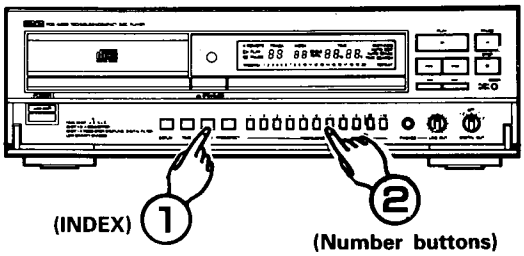

(1) "--" appears on the TRACK NO. display when the INDEX button is pressed.
(2) Input the track number using the number buttons.
Next, "--" appears on the INDEX display. Input the desired index number, and playback will start from that index number.
For example, to start from index 2 on track number 3, press INDEX, 3, then 2.

Indexes

- Indexes are numbers which are assigned to sections within a track. Check the disc's explanatory notes for the index numbers.
- If you input an index number not on the disc, playback will start from the last index number on the track.

❾ Repeating playback of all tracks ..... Repeat All

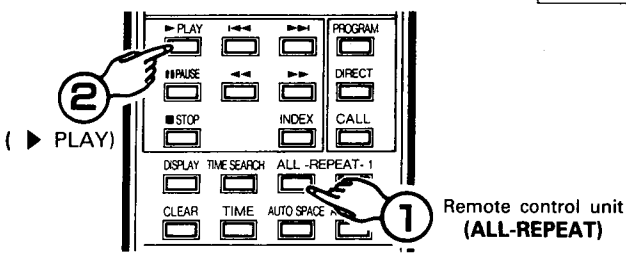

(1) Press the repeat all button (ALL).
(2) Press the play button (▶ PLAY).

- When pressing the repeat all tracks button (ALL), ALL is displayed.
- Steps (1) and (2) above may be reversed.
- To cancel repeat playback of all tracks, press the repeat all button (ALL) once more.
- Pressing the repeat all button (ALL) during programmed playback, playback of the tracks entered into the memory will be repeated.

❿ Repeating a Single Track ..... 1-track Repeat

- Press this button if you want to hear a track repeatedly.

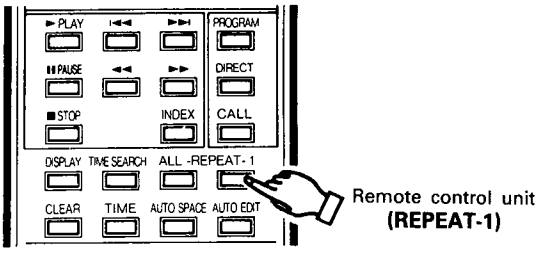

- When the 1-track repeat button (REPEAT-1) is pressed during playback, only the number of the track currently playing will remain lit on the calendar, as long as the track number is not over 20, and that track will be repeated.
- If the track number is 21 or over, the 1-track repeat function will work, but nothing will be lit on the calendar.

- When the 1-track repeat button (REPEAT-1) is pressed in the stop mode, track number 1 lights on the calendar and the 1 track repeat function is possible. To start, press the (▶ PLAY) button.
- To cancel 1-track repeat, press the 1-track repeat button (REPEAT-1) once again. Normal playback will resume.

⓫ Playing a desired time or interval ..... Time Search

- With this function you can specify the starting time and/or ending time in seconds, allowing playback of a very specific section of a track.

■ In the Stop Mode

- Specifying the starting time

① Press the TIME SEARCH button. The [TIME SEARCH] indicator will flash on the display, and the TRACK display will read "--"

② Use the number buttons to set in order the track number and the time (minutes and seconds).
Example: Starting from 2 minutes 34 seconds into track 3
Press the following buttons in order: [TIME SEARCH], [0], [3], [0], [2], [3], [4].
NOTE: If a track number or time not on the disc is set, the unit will return to the mode it was in before the first buttons were pressed.

③ Press the (▶ PLAY) button to begin playback from the specified time.

- Specifying the ending time
The ending time can be set before pressing the play button while the [TIME SEARCH] indicator is flashing using the following procedure:

④ Press the TIME SEARCH button. The [TIME SEARCH] indicator will stop flashing and the TRACK display will read "--".

⑤ Use the number buttons to set in order the track number and the time (minutes and seconds).
NOTE: It is not possible to set an ending time at a point before (or the same as) the starting time.

⑥ After specifying the ending time, press the (▶ PLAY) button to begin repeated playback between the two specified points. (A-B repeat by specifying the time)

■ In the Play Mode

1 When the TIME SEARCH button is pressed, the current track number and time (minutes and seconds) are stored in the memory and the [TIME SEARCH] indicator begins flashing.

2 When the (▶ PLAY) button is pressed, playback starts from the starting point stored in the memory.
To start playback over from the specified point, press the (▶ PLAY) button again.

③ If the TIME SEARCH button is pressed again, the ending time is stored in the memory, the [TIME SEARCH] indicator stops flashing, and the interval between the starting point and ending point is played repeatedly. (A-B repeat)
To cancel the time search function, press one of the following buttons:
(1) PROGRAM/DIRECT
(2) DIRECT (on remote control unit)
(3) OPEN/CLOSE

NOTE:

- If the search function is used after a track number and time (minutes and seconds) are specified with the disc holder open and no disc set, playback will start from the beginning of the first track on the disc.
- If a time over the time on the disc is specfied, playback will start from the beginning of the track following the specified track.

⓬ Inserting blanks between tracks ..... Auto Space

- This is convenient feature that will insert 4-second blanks between tracks, which can be used when recording compact discs on tape.

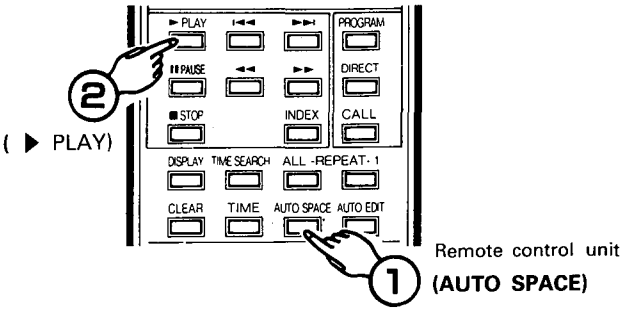

1. Pressing the auto space button (AUTO SPACE) will cause the [AUTO SPACE] indicator to light.
2. Press the play button (▶ PLAY) to start playback.
When a track has been played to its end, a 4-second silence is made before the next track starts playing.
3. Press the auto space button (AUTO SPACE) again to cancel the function.

TIMER-CONTROLLED PLAYBACK

■ Operation

1. Turn on the power of all system components.
2. Set the input selector on the amplifier to correspond to the input the CD player is connected to.
3. Make sure a disc has been loaded in the disc holder.
4. Check the time on the timer and then set the desired turn-on time.
5. Turn the audio timer ON.
Power is turned off automatically in all components connected to the timer.
6. When the preset turn-on time is reached, power is turned on in the system components, and CD playback starts from the first track.

NOTE:
The program will remain in the memory even if the power is turned off after setting the program or during program playback. After approximately two days, however, the program memory is cleared, reset the program, as necessary.

■ Connection

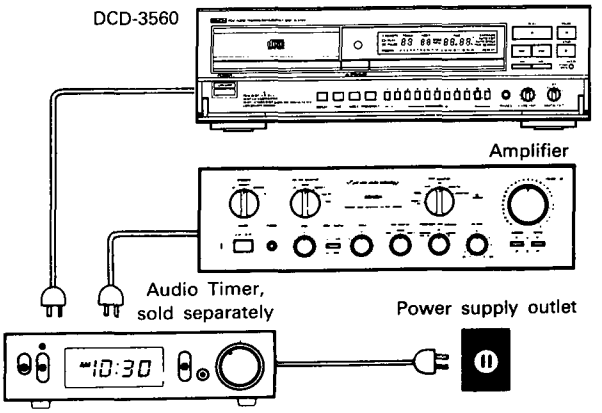

THE COMPACT DISC

1. Precautions on handling compact discs

- Do not allow fingerprints, oil or dust on the surface of the compact disc. If the signal surface is dirty, wipe it off with a soft, dry cloth. Wipe in circular motions from the center to the outside edge.
  Use of DENON's AMC-20/21 CD cleaner is recommended.
- Do not use water, benzene, thinner, record sprays, electrostatic proof chemicals, or silicone-treated cloth to clean discs.
- When handling discs always take care to prevent damaging the surface, in particular when removing a disc from the case and returning it.
- Do not bend compact discs.
- Do not apply heat to compact discs.
- Do not enlarge the hole in the center of the disc.
- Do not write on the disc and do not attach any labels.
- Condensation will form on the disc surface if it is brought into a warm room from a cold area, such as outdoors during winter. Wait until the condensation disappears. Never dry discs with hair dryers, etc.

2. Precautions on storage

- After playing a disc, always return it to its case.
- Keep discs in the cases when they are not to be played. This will protect them from dust and dirt and prolong their service life.
- Do not store discs in the following places:
  1) Places exposed to direct sunlight for a considerable time.
  2) Places subject to accumulation of dust or high humidity.
  3) Places exposed to high temperatures, such as close to heater outlets.

INSTALLATION PRECAUTIONS

The CD player uses a microcomputer for controlling internal electronic circuits. In the event that the player is used while a near-by tuner or TV is turned on, although unlikely, interference could occur either in the sound from the tuner or the picture of the TV. To avoid this, please take the following precautions.

- Keep the CD player as far away from the tuner or TV set as possible.
- Keep the power cable and connecting cable of the CD player separate from the antenna wires of the tuner and TV.
- Interference is particular likely to occur when an indoor antenna or a 300-ohm feeder cable is used. Thus, use of an outdoor antenna and 75-ohm coaxial cable is strongly recommended.

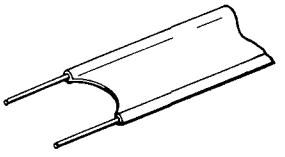

300-ohm feeder cable

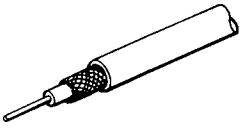

75-ohm coaxial cable

PLAYBACK USING THE REMOTE CONTROL UNIT

The accessory RC-222 remote control unit can be used to control the CD player from a convenient distance.

(1) Inserting the dry cell batteries

1. Remove the battery cover on the back of the remote control unit.

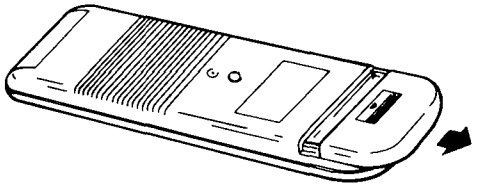

2. Insert two R03 (standard size AAA) dry cell batteries with correct polarity as indicated inside the battery compartment.

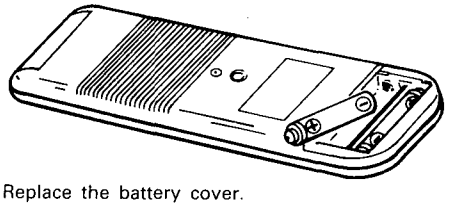

3. Replace the battery cover.

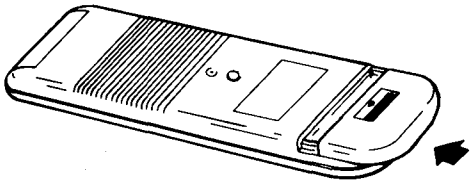

(2) Directions for Use

- Operate the remote control unit while pointing it towards the remote control sensor on the CD player (see below).

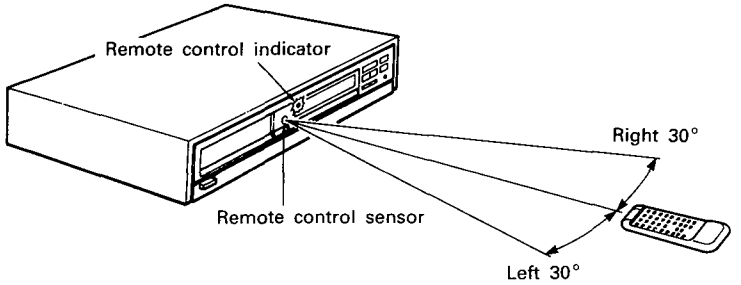

Notes on the Batteries

- The remote control unit uses standard size AAA dry cell batteries.
- The batteries will need to be replaced approximately once a year. Replacement may be necessary earlier depending on how much the remote control unit is used.
- If, in less than a year from the time new batteries were inserted, the remote control fails to operate the CD player from a near-by position, it is time to replace the batteries.
- Insert the batteries properly, following the polarity diagram inside the battery compartment, in other words make sure (+) and (–) terminals are properly aligned.
- Batteries are prone to damage and leakage.
  Therefore:
  - Do not combine new batteries with used ones.
  - Do not combine different types of batteries.
  - Do not jumper opposite poles of the batteries, expose them to heat, break them open nor expose of them in open fire.
- If the remote control unit is not to be used for a long period of time, remove the batteries from the unit.
- If the batteries have leaked, remove any traces of battery fluid from the battery compartment, wiping thoroughly with a dry cloth. Then insert new batteries.

When a remote control signal is received, the remote control indicator on front of the CD player lights briefly.

- The remote control unit can be used at a distance up to 8 meters in a straight line from the CD player. This distance is decreased if there are obstructions blocking the signal path or when the remote control unit is operated at an angle from the remote control sensor.
- The buttons on the remote control unit have identical functions with those on the CD player.
  However, the following functions cannot be remote controlled: Power ON/OFF, Digital output switching and Trap door opening.

Cautions on Use

- Do not press the operation buttons on the main unit and on the remote control unit simultaneously, as this will result in malfunction.
- The remote control unit may not operate properly if the remote control sensor is exposed to direct sunlight or strong artificial lighting, or if there is an object between the remote control unit and the remote control sensor.

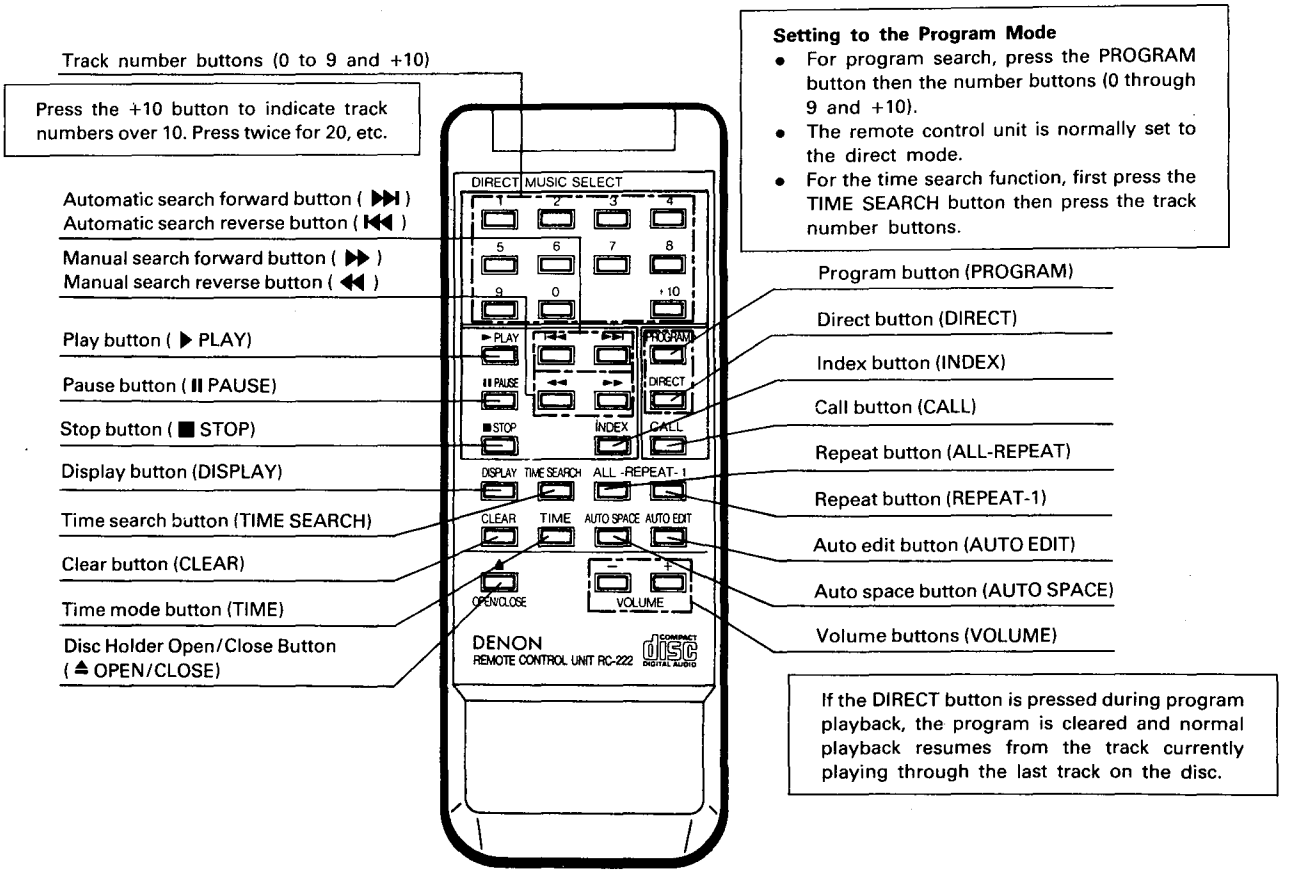

- **Direct Search**
  Normally, direct search is possible simply by pressing the desired number buttons.
- **Program Search (programming is not possible during playback)**
  Press the PROGRAM button, then press the number buttons.
  For example, to program tracks number 3, 11, and 5, press PROGRAM → 3 → +10 and 1 → 5.
  To cancel the program, press the DIRECT button.
- **Inputting the Track Numbers**
  For track numbers below 9, simply press the corresponding button. For track numbers of 10 and greater, press the +10 then the number buttons.
  For example, for track number 22 press +10 twice then 2.
- **Volume**
  The volume control on the unit will operate when the volume buttons are pressed. The volume can be checked by looking at the position of the control.

- **Auto Edit Button (AUTO EDIT)**
  * The tracks on a CD are automatically split into two halves, Side A and Side B, like an analog disc, with the division at the place between tracks which is closest to 1/2 the total playing time, and with the tracks remaining in the same order.
  * When this button is pressed in the stop mode, the total playing time for the first half and the track numbers on the calendar are displayed for approximately 2 seconds. Next, the same is done for the second half, after which the unit is automatically set to the pause mode at the beginning of the first track. When the PLAY or PAUSE button is pressed, playback begins, and the unit is automatically set to the pause mode at the beginning of the first track of the second half which was previously displayed. When the PLAY or PAUSE button is pressed again, playback begins, and the unit is automatically set to the stop mode at the end of the last track on the disc.
  * This function will only work for discs with a total of 20 tracks or less. Also, when this function is used the mode is automatically set to the program mode, so direct search is not possible.
  * The auto edit function is cleared when the STOP or DIRECT button is pressed.
  * The data for the total playing time recorded on the disc and the actual total playing time of the tracks differ, so there may be a difference between the time displayed in the stop mode (the total playing time) and the total of the times of the first and second halves in the auto edit mode (about 2 seconds).

TROUBLESHOOTING

If the CD player does not seem to be functioning properly, check the following:

Disc holder does not open or close.
- Is the power on?

When a disc is loaded, 00 00 0000 is displayed.
- Is the disc loaded properly? ..... See page 7
- Has the shipping lock been released? ..... See page 6

When the play button (▶ PLAY) is pressed, playback does not start.
- Is the disc dirty or scratched? ..... See page 11

There is no sound, or it is distorted.
- Is the output cord properly connected to the amplifier? ..... See page 6
- Have the amplifier controls been set correctly?

A specific section of the disc will not play.
- Is the disc dirty or scratched? ..... See page 11

Programmed playback does not work.
- Have programming been properly done? ..... See pages 8 and 12

Index search does not work. (only 1 displayed)
- Is the index search option proper? ..... See page 9
- Check whether there are 2 or more index numbers for that track.

Incorrect operation when buttons on the remote control are pressed.
- Is the remote control unit being operated too far from the CD player? ..... See page 11
- Are there obstacles blocking the ray?
- Is the remote control sensor exposed to strong light?
- Are the batteries exhausted?

SPECIFICATIONS

AUDIO SECTION

Number of channels:	2
Frequency response:	2~20,000 Hz, ±0.2 dB
Dynamic range:	100 dB or greater
S/N ratio:	120 dB (1 kHz)
Harmonic distortion:	0.0015% (1 kHz)
Separation:	110 dB (1 kHz)
Wow/flutter:	Below measurable limits (±0.001% W peak)
Output voltage:	Fixed: 2.0 Vrms Balanced type: 2 Vrms/10 kΩ load Variable: 2.0Vrms/line out volume max. (Variable output voltage with no 600Ω load on balanced type output)

DISC

Diameter:	Compact disc 120mm/80mm

SIGNAL FORMAT

Sampling frequency:	44.1 kHz
Quantization bit:	16-bit linear/channel
Transfer bit rate:	4.3218 Mb/sec.

DIGITAL OUTPUT SIGNAL FORMAT

Format:	Digital audio interface AES EBU
Coaxial output voltage:	0.5 Vpp, 75Ω
Optical power:	−12 dBm
Light wavelength:	650 nm

PICKUP

Type:	Objective lens driving type optical pickup
Objective lens driving method:	Two-dimensional parallel driving
Light source:	Semiconductor laser
Wavelength:	780 nm

GENERAL

Power supply:	50/60 Hz voltage is shown on rating label.
Power consumption:	32 W
External dimensions:	434 (17-3/32")(W)×135 (5-5/16")(H)×390 (15-23/64")(D) mm
Weight:	17 kg

FUNCTIONS AND DISPLAYS

Functions:	Direct search, automatic search, program search, repeat play, manual search, index search, time search
Displays:	Track number, index, time, program
Others:	Headphones jack (variable level), digital output terminals (three systems – 2 coaxial, 1 optical), fixed level output terminals (unbalanced/balanced), variable level output terminals (unbalanced)

REMOTE CONTROL UNIT RC-222

Remote control method:	Infrared pulse type
Power supply:	DC3V, two R03/AAA batteries
External dimensions:	60 (W) × 164 (H) × 16 (D) mm
Weight:	98 g (including batteries)
ADDITIONAL ACCESSORIES	Wood side panels ACA-58.

Please contact your local DENON dealer for any additional accessories you may need.

* For improvement purposes, specifications and design are subject to change without prior notice.

NOTE FOR HANDLING OF LASER PICK-UP

- **NAMES OF PARTS**

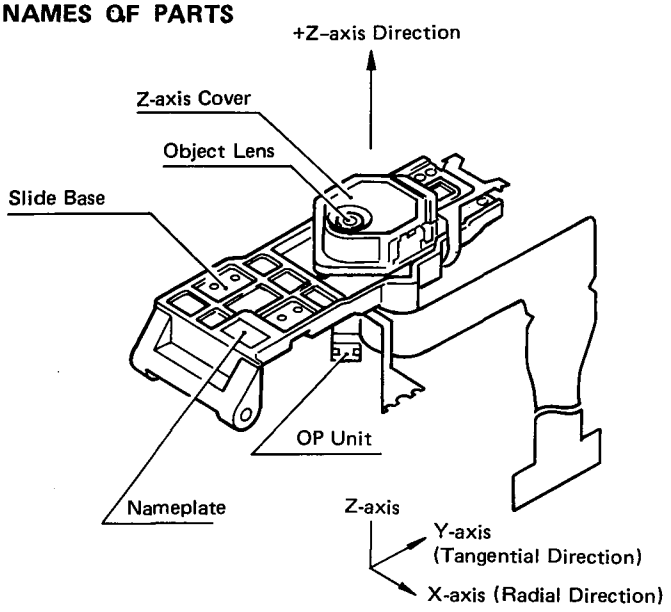

- **NAME PLATE**

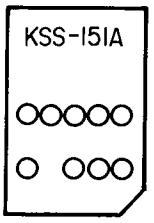

Year (last figure)

Day Month | Quality Control No.

Lot No. ○○ ○ ○ ○

Note: Month indication X, Y, Z signify 10, 11,12.

Iop ○ ○ ○ ○

Control Letter by the Plant | 1 Figure 1st Decimal Place

10 Figures

Indication unit is mA omitted a decimal point.

- **CONNECTION DIAGRAM OF CONECTOR (1)**

KSS 151A Accessory flexible wire terminals.

No.	Description	No.	Description
1	Linear motor	11	PD
2	Linear motor	12	VR
3	2-axis −F	13	GND
4	−T	14	PD D
5	+T	15	C
6	+F	16	A
7	Senser	17	B
8	Senser	18	K
9	LD GND	19	F
10	LD	20	E

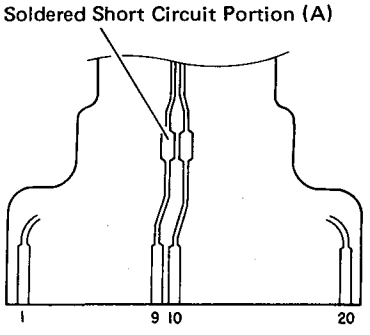

- **CONNECTION DIAGRAM OF CONECTOR (2)**

KSS-151A → SERVO AMP P.W.B → MAIN P.W.B.

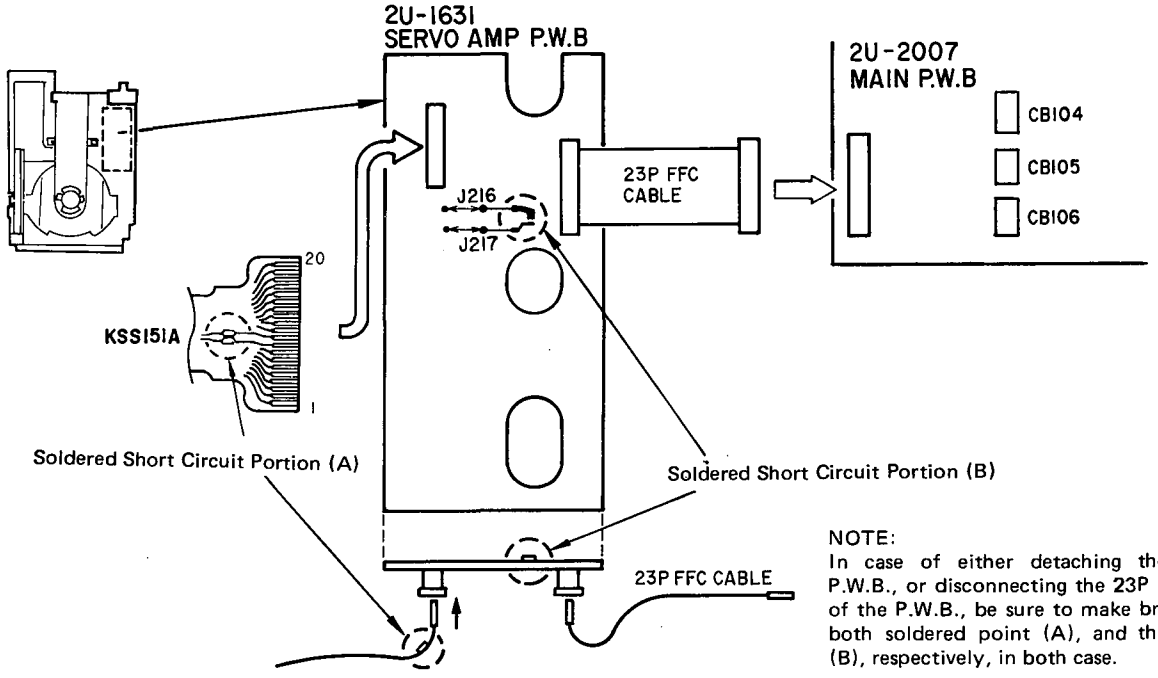

NOTE:
In case of either detaching the SERVO AMP P.W.B., or disconnecting the 23P FFC CABLE out of the P.W.B., be sure to make bridge soldered for both soldered point (A), and the soldered point (B), respectively, in both case.

Cautions for Handling the Laser Pick-up

The laser pick-up KSS-151A is assembled and precisely adjusted using a sophisticated manufacturing process in our plant. Do not disassemble or attempt to readjust it. Please keep the following instructions carefully in handling pick-up.

1. Handle with Care

(1) Storage
Do not store the pick-up in dusty, high-temperatured or high-humidity environments.

(2) Please take care for preventing from shock by falling down or careless handling.

2. Laser Diode (LD)

(1) Protect your eyes
The laser beam may damage the human eye, since the intensity of the focused spot may reach 7 x 10^3 W/cm^2 even if the intensity at the objective lens is 400 μW maximum. As the light beam spreads after focused through the objective lens, it does not effect you in the place as far as more than 30 cms. However, do not look at the laser light beam either through the objective lens directly nor another lens or a mirror.

(2) Poison of As
Since the LD chip contains As (Arsenic), as GaAs + GaAlAs, as known as the poison, although the poison is relatively weak, in comparing with others, e.g. As_2O_3, $AsCl_3$ etc., and the amount is small, avoid putting the chip in acid or an alkali solution, heating it over 200°C or putting it into your mouth.

(3) Avoid surge current or electrostatic discharge
The LD may be damaged or deteriorated by it's own strong light if a large current is supplied to it, even if only a short pulse.
Make sure that there is no surge current in the LD driving circuit by switches or else. Be careful to handle pick-up as it may be damaged in a moment by human electrostatic discharge. The pins of the LD are short-circuited by solder for protection during shipment.
For safety handling of an LD, grounding the human body, measuring equipments and jig is strongly recommended. And still it is further desirable to make use of mat on the platform and floor for handling the LD.
To open the short circuit, remove the soldering quickly with a soldering iron whose metal part is grounded. The temperature of the soldering iron should be less than 320°C (30W).

3. Actuator

(1) The performance of the actuator may be effected if magnetic material is located nearby, since the actuator has a strong magnetic circuit. Do not permit dust to enter through the clearance of the cover.

(2) Cleaning the lens
It may change the specifications by attaching dust or ash on the object lens. Clean the lens with a cleaning paper dampened a little water, not pressing lens with so much strength by the cleaning paper.

4. Metal Bearing

As the metal bearing of Cu-compound sintered alloy is impregnated with FROIL946P(*Part No. 529 0054 007), never fail to supply the bushing with the same lubricant at the time of replacing the pick-up.

5. Handling

Please handle the laser pick-up with holding the slide base (rosin molded part).
When either a part of human body or some other things may happen to touch directly with the circuit part of P.W. Board, it may cause deterioration, take careful attention in handling this base.

6. Deterioration

When difficulty occurs either in focus or tracking adjustment nor able to adjust the focus or tracking, it seems that the laser pick-up is deteriorated. In these cases, check a value of laser diode current and give a decision for deterioration.

7. Fundamental Deterioration Decision of Laser Pick-up

(1) If a voltage value in between No. 2 and No. 6 pins of TP102 of the servo and signal processor unit, the value of laser diode current "iop" can be found by a formula "iop1" = $\frac{V1}{22}$.

(2) If an "iop" exceeds ±10% compared with the IOP indication on the laser pick-up nameplate, there is a fair chance for deterioration when it is checked under a circumambient temperature 23°C.

(3) When the circumambient temperature changes ±10°C, "iop1" will change ±5%. The "iop1" will also be changed by the passage of time.

(4) In case of the above conditions taking into consideration and performed the adjustment in proper way, if the HF level at pin No. ① of TP102 on Main Unit, and in between GND4 becomes 1V or lesser values; or ajitter occurs great, the laser pick-up may be deteriorated.

DISASSEMBLY

1. **Top Covers (A) (B) Removal**
   Remove 6 screws on the top and detach the Top Covers (A) (B) as per the arrow shows.

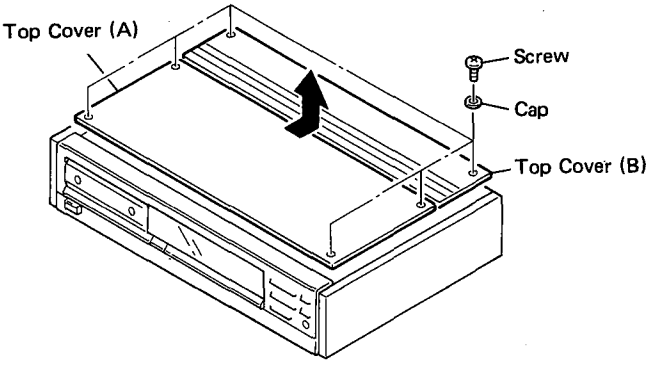

2. **Side Panels (L) (R) Removal**
   Unfasten 4 screws from the both sides and remove the Side Panels (L) (R) as per the arrow shows.

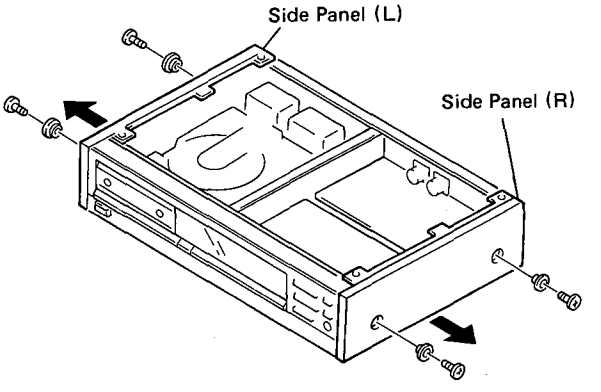

3. **Front Panel Removal**
   After unsecure 2 screws and remove the loader panel as indicated by the arrow, unfasten 6 screws on the top and bottom and detach the Front Panel as per the arrow shows.

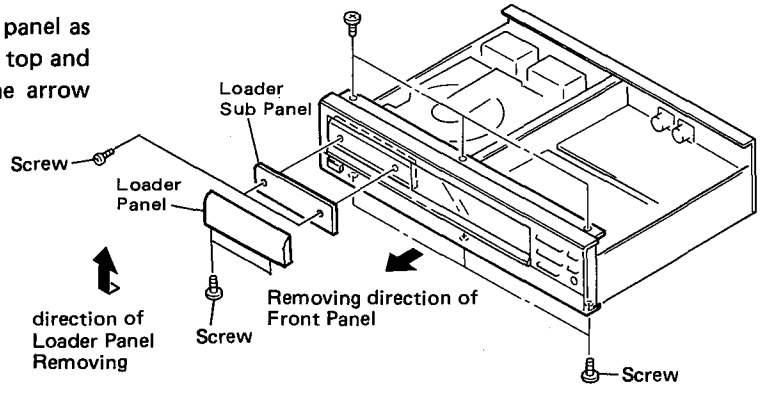

- **Housing Ass'y Removal**
  - Removing 4 screws Ⓐ 1, Ⓐ 2 enables detaching the laser pick-up magnet, yoke, turntable, and spindle motor as one assembly.
  - Unfastening screws Ⓐ1, Ⓐ2 pemits disassembling the parts for floating as illustration shows.
  - A common type are used for F cover and H damper, but the 2 different types are utilized for coil spring and collar to keep balance. Remind this at the time of assembling.

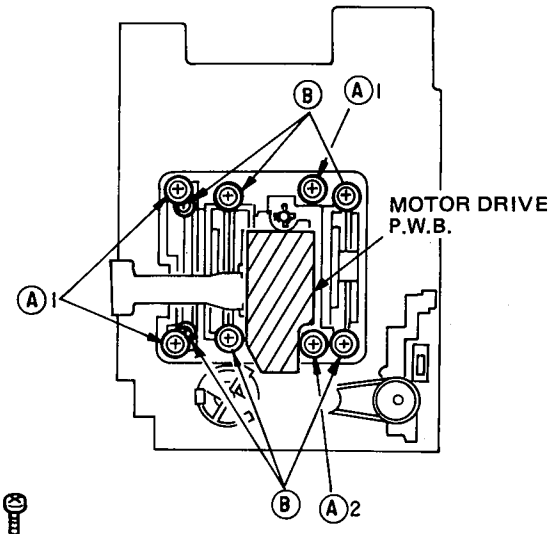

A -1	463 0515 000 Coil spring (D)	433 0485 100 Collar (B)
A -2	463 0514 001 Coil spring (C)	433 0514 107 Collar (C)

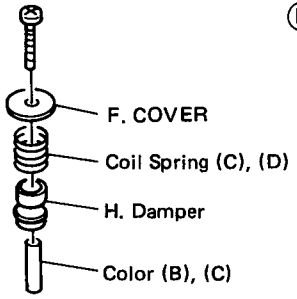

- Coil Spring (D) (utilizing 3 each) is marked in red.
- Coil Spring (C) (utilizing 1 each) is without marking.
- Collar (C) (utilizing 1 each) is nickel plated brass.
- Collar (B) (utilizing 3 each) is black plated brass.

- **Laser Pick-up KSS-151A Removal**

(1) Remove the housing ass'y in the first place, then loosen the screw (refer to "Mechanism Exploded View" (59)) mounting the turntable, and detach the turntable.
(2) Unfasten 2 screws Ⓕ and detach the spindle motor ass'y.
(3) Remove 6 screws Ⓑ as indicated in the illustration of "Housing Ass'y Removal".
(4) Unsecure 2 screws Ⓐ and unsolder 2 places Ⓑ and detach the speed detection coil.
(5) Remove 2 screws Ⓒ and unsolder 2 places Ⓓ and detach the drive coil.
(6) Pulling out the shaft in the portion Ⓔ permits detaching the Laser Pick-up.

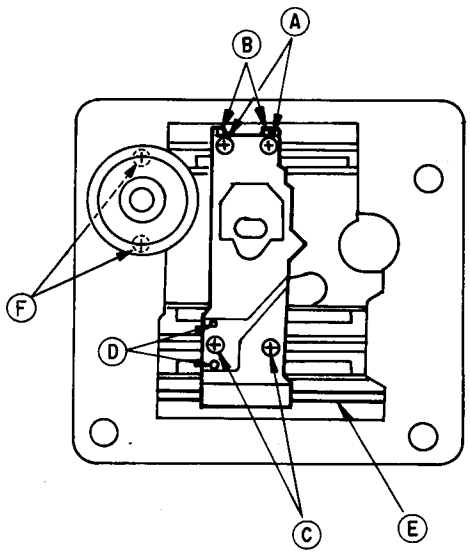

MECHANISM UNIT ADJUSTMENT

- **Turntable Height Adjustment**

(1) Mount the spindle motor ass'y to the housing with 2 screws. (Refer to the illustration of "Laser Pick-up KSS-151A Removal")
(2) Set the Turntable to the shaft and insert the 2 mm spacer (jig) between the Turntable and the housing as illustration shows.
(3) While lightly pressing the Turntable from the top side, tighten screw Ⓖ with a hex. wrench.

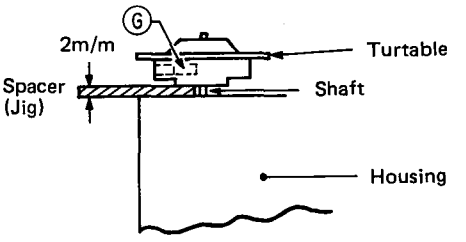

- **Spindle Motor Adjustment**

(1) Disassemble Mechanism Unit in the first place, then detach the Spindle Motor Ass'y.
(2) Connect the adjustment wire connector (6P) to the measuring equipments as per illustration shows.

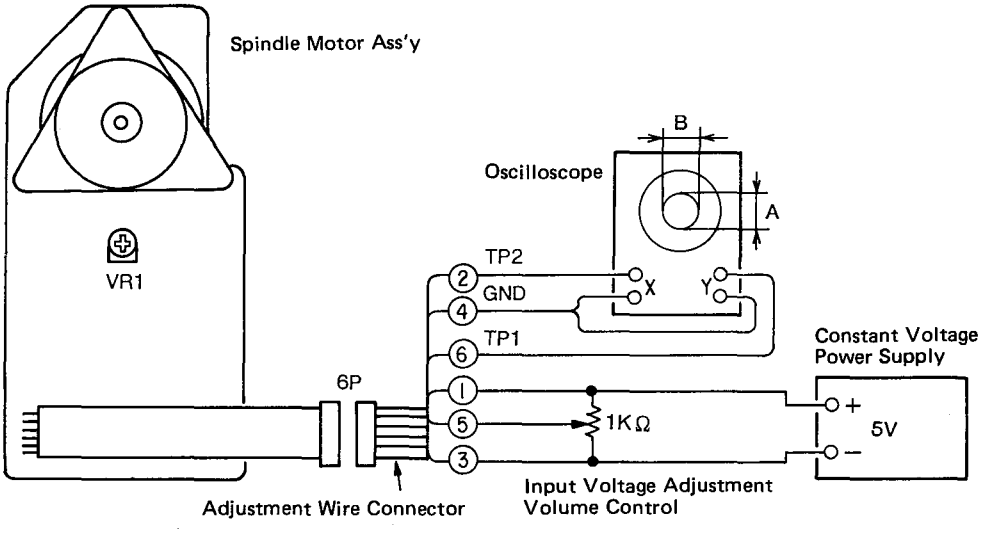

(3) Adjust the balance volume control VR1 and obtain even amplitude for vertical (A) and horizontal (B). (Rotating the VR causes shifting (B) amplitude.)
(4) In case using a dual mode oscilloscope to execute adjustment, set it to ALTER or CHOPPER mode and apply a signal to CH1 and CH2. Then adjust the balance volume control VR1 and obtain even amplitude for both waveforms as illustration shows.

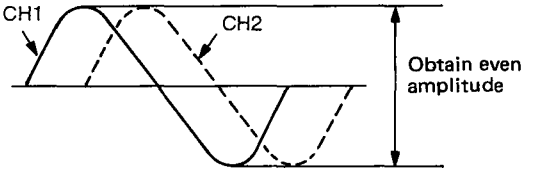

Note: Be noted that a greater input signal causing the saturation of waveform.

ADJUSTMENT

Microcomputer built in the unit, comprises service program to facilitate servo adjustment by pushing operation button.

1. Start service program

(1) Turn power switch OFF.
(2) Shortcircuit jumpers J37, J39 on servo P.W.B. (2U-2007)
(Caution) Do not touch other jumpers.
(3) Turn power switch ON.
(Service program starts, and displays track number 01)

(Caution)
- When service program started normal operation of buttons will be defeated.

2. Service program function

Button	Function	Description
▲ OPEN/CLOSE	Opens or closes the disc holder.	• Opens or closes only when disc is stopped. • Operate other keys after open or close .
■ STOP	Stops system function.	• Displays track number 01 . • Push when adjustment completed, or do it again.
▶ PLAY	Starts focus servo and disc turns.	• Push when adjust tracking offset. • When completed, displays track number 02 .
❚❚ PAUSE	Starts focus servo, tracking servo, slide servo, spindle servo.	• When PLAY button is pushed, starts tracking servo and slide servo. • When completed, track number 03 .
Other button	No normal operation.	• Do not operate buttons other than above. • If misoperated, immediately turn power switch OFF.

(Caution)
- Do not use remote control during service program mode.

3. Adjustment

(1) Prior to start adjustment
Before adjusting laser P.U. and spindle motor, be sure adjust turntable height at the time of turntable assembly.
(2) Necessary equipment for adjustment
1 Dual trace oscilloscope
2 Reference disk (CA-1094) 富田靖子
3 Oscillator (10 Hz ~ 10 kHz, 0 ~ 3 Vp-p)
4 Frequency counter (readable more than 5 MHz)
5 Filter for measurement are provided in servo P.W.B. (2U-2007)

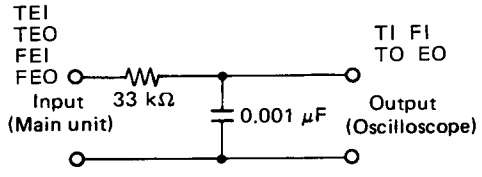

(Filter for measurement)

(3) Location

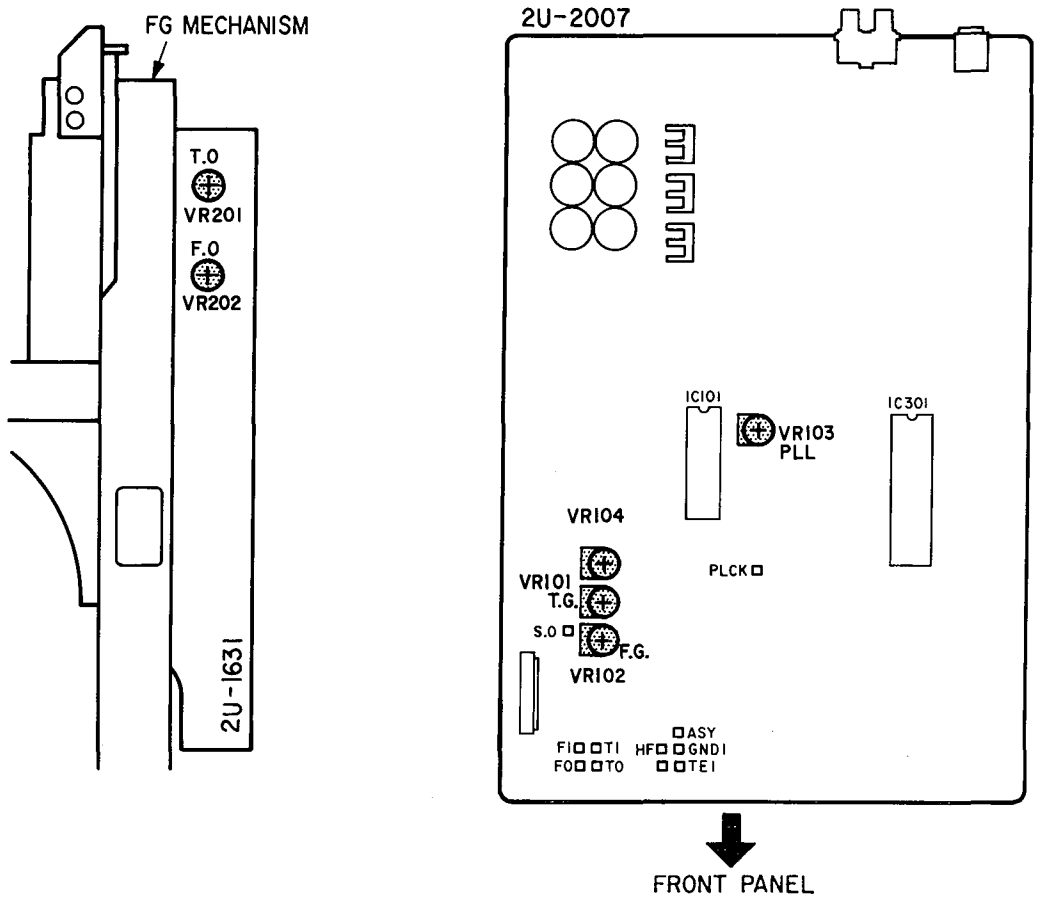

(4) Preset

1.	Start service program.	
2.	Preset VR101 ~ 104, 201, 202 as per left figure.	VR201 (T.O) Center; VR104 (S.O) 6 o'clock; VR103 (PLL) 6 o'clock; VR202 (F.O) Center; VR101 (T.G) 6 o'clock; VR102 (F.G) 6 o'clock
3.	Step.	1. PLL 2. Slide offset 3. Tracking offset 4. Focus gain 5. Focus offset 6. Tracking gain 7. Tracking offset recheck

4. PLL Adjust

Connection

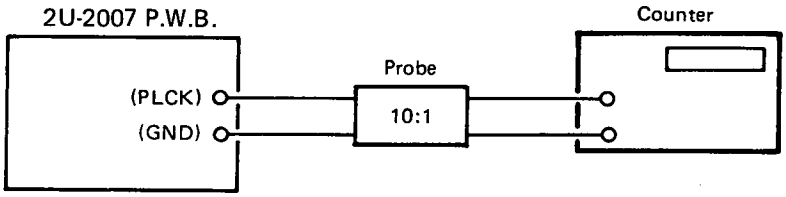

- Ground Test point [ASY] to GND.

Adjust	Check	Step
(Volume)	(Counter)	• Turn PLL volume VR103 so that frequency counter reads 4.32 MHz.
VR103	4.32 MHz ± 10 kHz	

5. Slide offset

Connection Diagram

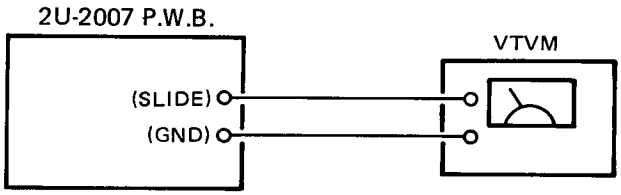

Adjustment Point	Confirming Matter	Adjustment Procedure
Volume Control	(VTVM)	Rotate the volume control VR104 (SLIDE OFFSET) and adjust the value to 0V on the VTVM. (Disc in the stop mode.)
VR104	0V ± 50 mV	

6. Tracking offset

Connection

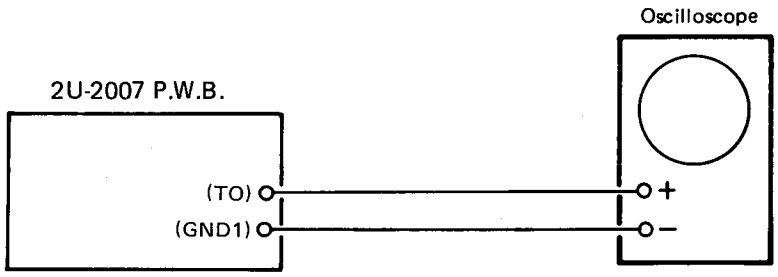

Oscilloscope (DC range)		Adjust	Check	Step
V	H	(Volume)	(Oscilloscope)	1. Push [▲ OPEN/CLOSE] and load disc holder reference disk. 2. Push [▲ OPEN/CLOSE] and close disc holder. 3. Push [▶ PLAY] to turn disc. (Displays track number 02) 4. Short (+) (-) of oscilloscope and check the base line. 5. Adjust VR201 [T-OFFSET] to equalizer upper and lower amplitude of the waveform.
0.1V/div	1~2 ms/div	VR201 [2U-1631 Servo Amp unit]	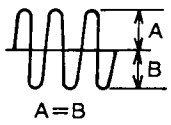 A=B	

7. Focus gain

Connection

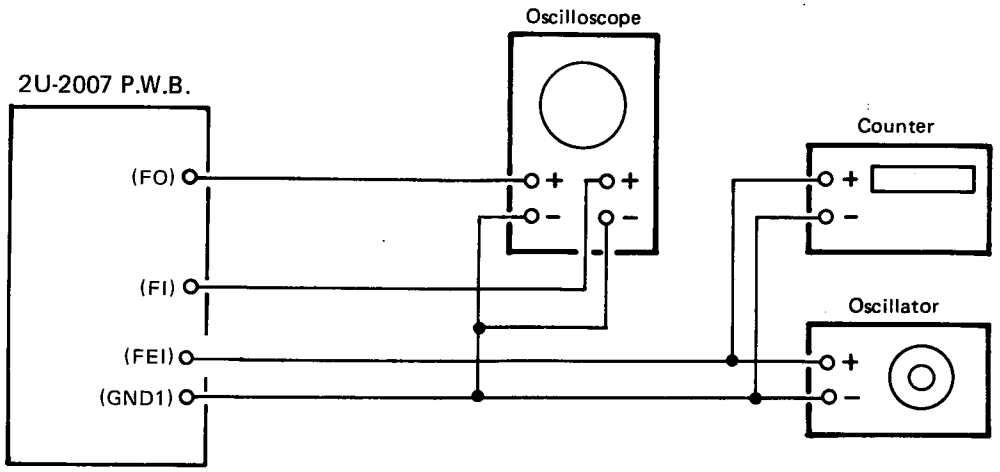

Oscillator	Counter	Oscilloscope V	Oscilloscope H	Adjust	Check	Step
580 Hz 1 Vp-p (±0.1 V)	580 Hz	• DC range • X-Y mode		VR102	(Oscilloscope) Y axis X axis Phase 90° Waveform not right X axis Y axis	1. Push [II PAUSE] (Displays track number 03) 2. Set oscillator to 580 Hz/1 Vp-p. 3. Switch oscilloscope input to X-Y mode. 4. Adjust VR102 [F-GAIN] to symmetrize Lissajous figures to X and Y axes.

8. Foucs offset

Connection

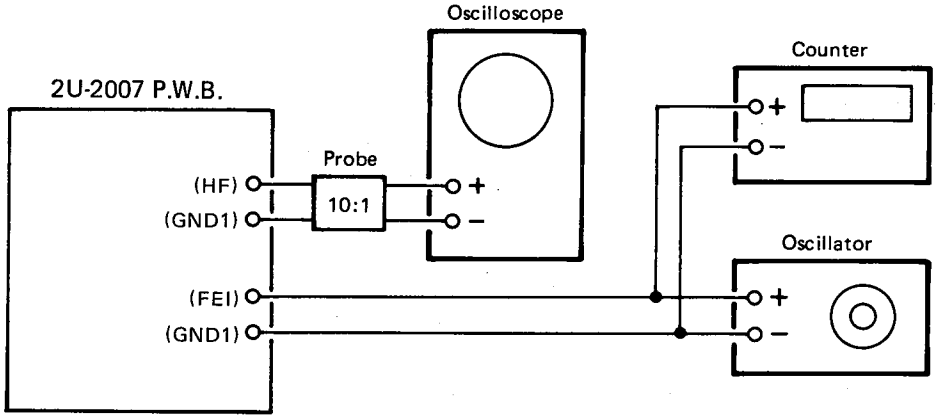

Oscillator	Counter	Oscilloscope		Adjust	Check
		V	H	(Volume)	(Oscilloscope)
580 Hz 1 Vp-p (±0.1 V)	580 Hz	50 mV/div or 20 mV/div	0.2 μs/div or 0.5 μs/div	VR202 [2U-1631 Servo Amp unit]	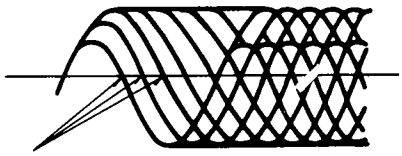 Adjust to minimize pattern jitter. 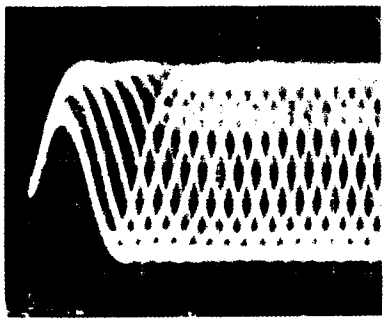 Pattern
		• Set input mode to ALTERNATE or CHOPPER.			

Step

1. Push [II PAUSE].
2. Set oscillator to 580 Hz, 1 Vp-p (±0.5 V).
3. VR202 [F-OFFSET] to minimize pattern jitter.

9. Tracking gain

Connection

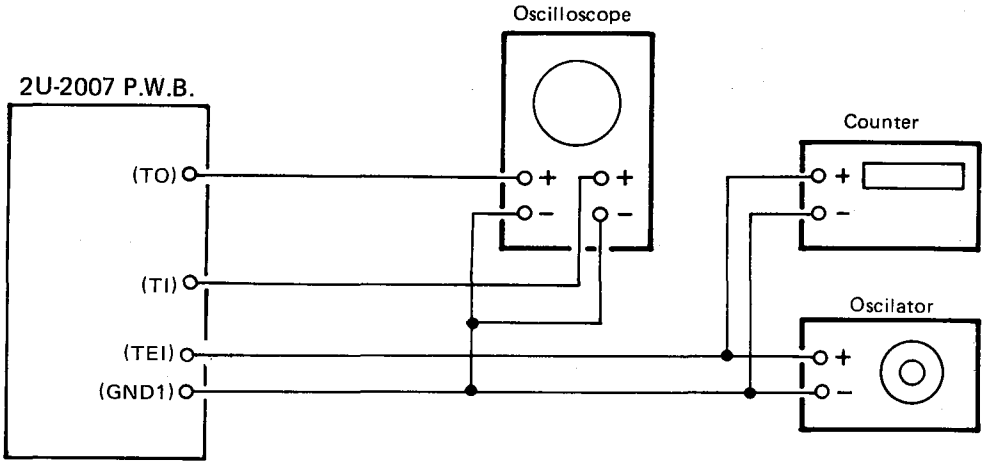

• Caution: Connect oscillator after [II PAUSE] pushed and servo function started.

Oscillator	Counter	Oscilloscope V	Oscilloscope H	Adjust	Check	Step
		V	H	(Volume)	(Oscilloscope)	1. Push [II PAUSE]. (Displays track number 03)
• 1.8 HkHz • 3 Vp-p (±0.1V)	1.8 kHz	• DC range • X-Y mode		VR101	Y axis / X axis / Phase 90°	2. Connect oscillator. 3. Set oscillator to 1.8 kHz/3 Vp-p. 4. Switch oscilloscope input to X-Y mode. 5. Adjust VR104 [T-GAIN] to symmetrize Liseajous figures to X-Y axes.

10. Tracking offset adjustment check

(1) Adjust tracking offset again.
(2) Push [■STOP] and stop disc.
(3) Push [▶PLAY] and check disc turns.
Note: If disc does not turn, push [▶PLAY] again and check track number 02 is diasplayed.
(4) Check oscilloscope waveform upper and lower amplitude are same to base line.
(5) Push [■STOP] and stop disc.
(6) Push [▲OPEN/CLOSE] and remove the reference disc.

HEAT RUN MODE FUNCTION

Heat Run Mode

1) To activate

While hold pushing AUTO EDIT, A-B and ⏮ keys simultaneously, turn the unit power on. The remote control sensor indicator will light to show that the unit is shifted in Heat Run mode.

Be sure to load the disc previously.

Press the disc holder open/close button (⏏ OPEN/CLOSE) to cancel Heat Run mode.

★ **This mode functions only for a disc with 21 pieces of music or more. For a disc with 20 pieces of music or lesser, please do not use.**

2) Operation

During the Heat Run mode to shift the unit in Play mode makes the unit replays from the first music after opens the loader once and re-closes it when finish playing the last track (comes into lead out).

Hereafter, operates open/close of loader, servo on, reading of TOC, and playing repeatedly, and repeats playing the two traks; the first and the last ones.

3) Error Message

When the system error occurs while in Heat Run mode, the following error message will display on the Track No. indicator and stops operation.

1. E1
   At the time of Focus Servo does not activate.
2. E2
   When unable to detect synchronous pattern however the disc is in rotating. (GFS does not drive.)
3. E3
   No synchronous pattern can be detected while in Play mode. (No GFS drives.)
4. E4
   When TOC is unreadable in despite of servo is activated.
5. E5
   In case of loader malfunctions. (Unable to turn on the switch.)
6. E6
   The inner circle switch of Pick-up does not turn off.
7. E7
   The inner circle switch of Pick-up does not turn on.

★ The number of operation up to the stop will be displayed on the minute and second portion of the indicator.

IC TERMINAL FUNCTION LIST

CXA1081S

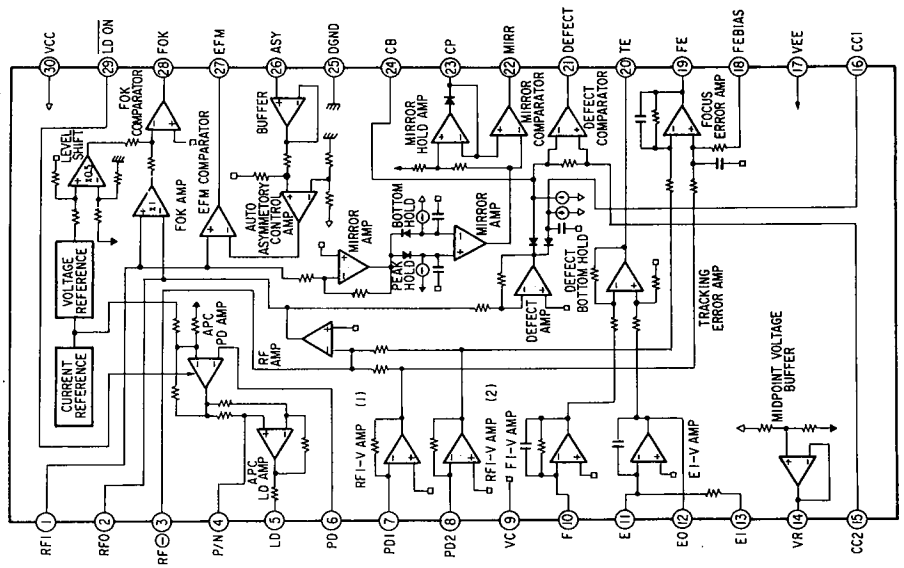

CXA1081S Terminal Function

Terminal No.	Terminal Symbol	I/O	DC voltage (V)	Terminal Function
1	RFI	I	0	Input terminal of capacitance coupled RF summing amplifier output.
2	RFO	O	V_{RFO}	Terminal for RF summing amplifier output. Check point of Eye pattern.
3	RF(–)	I	0	Feedback input terminal of RF summing amplifier.
4	P/N	I	0 (VC)	P-sub/N-sub shifting terminal for Laser Diode (LD). (DC voltage: at N-sub.)
5	LD	O	-1.8	Output terminal of APC (Automatic Power Control) LD amplifier. (DC voltage: at N-sub, PD opened.)
6	PD	I	0	Input terminal of APC (Automatic Power Control) PD amplifier. (DC voltage: opened.)
7	PD1	I	0	Reverse input terminal of RF I-V amplifier (1). Receives a input current through A + C terminals of photo diode.
8	PD2	I	0	Reverse input terminal of RF IV amplifier (2). Receives a input current through B + D terminals of photo diode.
9	VC	–	0	At ± dual-power supply: Becomes GND. At mono-power supply: Becomes VR. (connect to pin 14.)
10	F	I	0	Reverse input terminal of F I-V amplifier. Receives a input current through F terminal of photo diode.
11	E	I	0	Reverse input terminal of E I-V amplifier. Receives a input current through E terminal of photo diode.
12	EO	O	0	Output terminal of E I-V amplifier.
13	EI	I	0	Feedback input terminal of E I-V amplifier. For gain controlling of E I-V amplifier.
14	VR	O	V_{CVO}	Output terminal of DC voltages $(V_{CC} + V_{EE})/2$.
15	CC2	I	1.0	Input terminal of capacitance coupled defect bottom hold output.
16	CC1	O	1.2	Output terminal of defect bottom hold.
17	V_{EE}	–	-2.5	At ± dual-power supply: Becomes negative power supply terminal. At mono-power supply: Becomes GND.
18	FE BIAS	I	0	Bias terminal for non-reverse side of focus error amplifier. For CMR controlling of focus error amplifier.
19	FE	O	V_{FEO}	Output terminal of focus error amplifier.
20	TE	O	V_{TEO}	Output terminal of tracking error amplifier.
21	DEFECT	O	V_{DFCTL}	Output terminal of defect comparator. (DC voltage: Connect a 10 kΩ load resistance.)
22	MIRR	O	V_{MIRL}	Output terminal of MIRR comparator. (DC voltage: Connect a 10 kΩ load resistance.)
23	CP	I	-1.3	Connecting terminal for MIRR hold capacitor. Non-reverse input terminal of MIRR comparator.
24	CB	I	0	Connecting terminal for defect bottom hold capacitor.
25	D GND	–	-2.5	At ± dual-power supply: GND. At mono-power supply: GND (V_{EE}).
26	ASY	I	–	Input terminal of auto-asymmetry control.
27	EFM	O	V_{EFMH}	Output terminal of EFM comparator. (DC voltage: Connect a 10 kΩ load resistance.)
28	FOK	O	V_{FOKL}	Output terminal of focus OK comparator. (DC voltage: Connect a 10kΩ load resistance.)
29	$\overline{\text{LD ON}}$	I	-2.5 (D GND)	ON/OFF shifting terminal for laser diode (LD). (DC voltage: At LD ON.)
30	V_{CC}	–	2.5	Positive power supply terminal.

CXA1082AS/1182S Terminal Function

Terminal No.	Terminal Symbol	Terminal Function
2	DFCT	Defect signal input terminal. Defect measure circuit activates at "H".
3	TE	Tracking error signal input terminal.
4	TZC	Tracking zero cross comparator input terminal.
5	ATSC	Input terminal of ATSC detecting window comparator.
6	FE	Focus error signal input terminal.
8	FGD	In case of reducing higher range gain of focus servo, connect a capacitor between this terminal and terminal number (9).
9	FS3	Shifts higher range gain of focus servo by FS3 ON/OFF.
10	FLB	Terminal for external time constant to increase lower range of focus servo.
11	FEO	Focus drive output.
12	FE(–)	Reverse input terminal for focus amplifier.
13	SRCH	Terminal for external time constant to make focus search waveform.
14	TGU	Terminal for external time constant to shift higher range gain of tracking.
15	TG2	Terminal for external time constant to shift higher range gain of tracking.
17	TAO	Tracking drive output.
18	TA(–)	Reverse input terminal for tracking amplifier.
19	SL(+)	Non-reverse input terminal of sled amplifier.
20	SLO	Sled drive output.
21	SL(–)	Reverse input terminal of sled amplifier.
22	SSTOP	Terminal for limit switch ON/OFF to detect disc inner most circle.
23	FSET	Terminal to compensate peak in focus tracking phase, and for setting F_O in CLV LPF.
24	SENS	Terminal to output FZC, AS, TZC, SSTOP, $\overline{BUSY}$ by command from CPU.
26	C. OUT	Terminal to output signal for track number count.
27	DIRC	Terminal is used at the time of 1 track jump. A 47 kΩ pull up resistor is included.
28	XRST	Reset input terminal. Resets at "L".
29	DATA	Serial data input from CPU.
30	XLT	Latch input from CPU.
31	CLK	Serial data transfer clock input from CPU.
33	BW	Terminal for external time constant of loop filter.
34	PDI	Input terminal of PDO for CXD1125 phase comparator.
35	ISET	Delivers a current to set the height of focus search, track jump, and sled kick.
36	VCOF	Resistance value between this terminal and terminal (37) is nearly proportion to VCO free-run frequency.
38	C864	Output terminal of 8.64 MHz VCO.
39	LOCK	Reckless drive protection circuit activates at "L". A 47 kΩ pull up resistor is included.
40	MDP	Terminal to connect MDP terminal of CXD1125.
41	MON	Terminal to connect MON terminal of CXD1125.
42	FSW	Terminal for external LPF time constant of CLV servo error signal.
44	SPDL(–)	Reverse input terminal for spindle drive amplifier.
45	SPDLO	Spindle drive output.
46	WDCK	Clock input for auto-sequence. Normally applied 88.2 kHz.
47	FOK	FOK signal input terminal.
48	MIRR	MIRR signal input terminal.

CXA1082AS/1182S

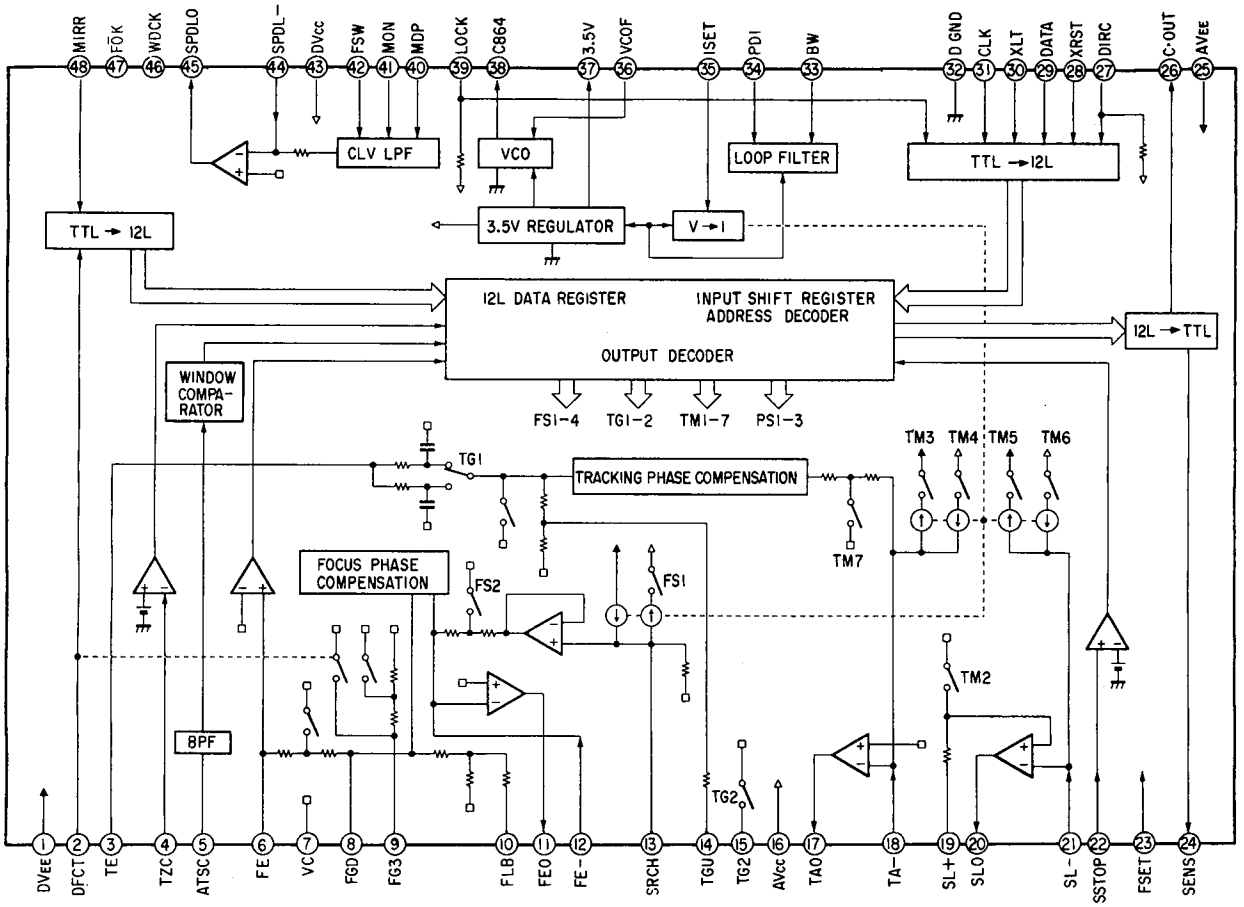

CXD1125Q

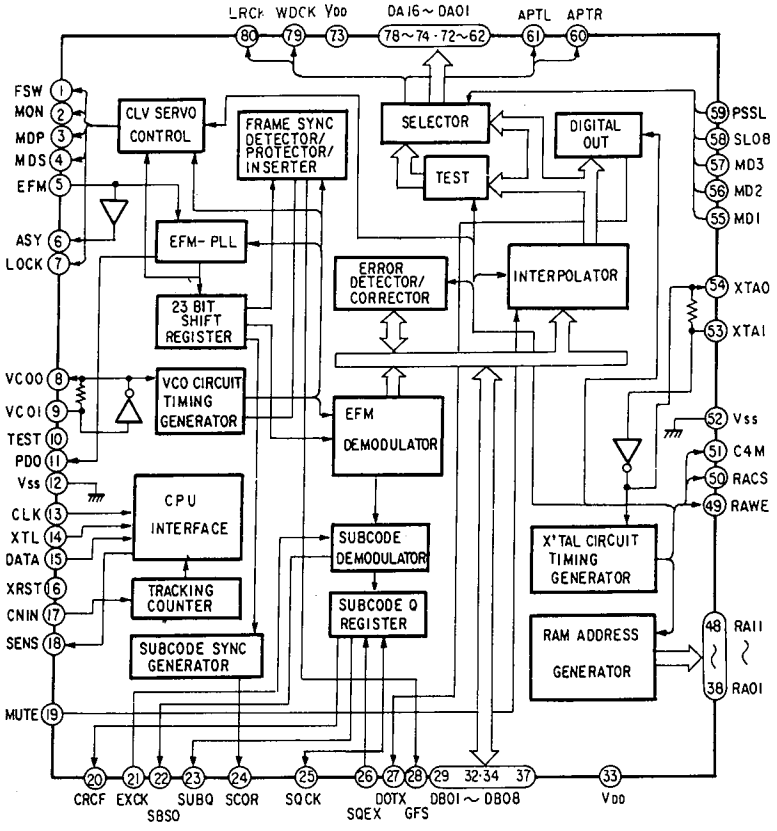

CXD1125Q Terminal Function

Terminal No.	Terminal Symbol	I/O	Terminal Function
1	FSW	O	Output to shift time constant of output filter for spindle motor.
2	MON	O	ON/OFF control output for spindle motor.
3	MDP	O	Drive output for spindle motor. Rough control at CLV-S mode and phase control at CLV-P mode.
4	MDS	O	Drive output for spindle motor. Speed control at CLV-P mode.
5	EFM	I	Input of EFM signal from RF amplifier.
6	ASY	O	Output to control slice level of EFM signal.
7	LOCK	O	Sampling GFS signal by WFCK/16 and if it is "H", delivers "H"; if it is continuously "L" 8 times, delivers "L".
8	VCOO	O	VCO output. When EFM signal is locked, f=8.6436 MHz.
9	VCOI	I	VCO input.
10	TEST	I	(0V).
11	PDO	O	Phase comparing output for EFM signal and VCO/2.
12	Vss	–	GND (0V).
13	CLK	I	Serial data transfer clock input from CPU. Latches data by rising edge of clock.
14	XLT	I	Input of Latch from CPU. Latches 8-bit shift register data (serial data from CPU) to each register.
15	DATA	I	Input of serial data from CPU.
16	XRST	I	System reset input. Resets at "L".
17	CNIN	I	Input of tracking pulse.
18	SENS	O	Answer to address, output internal condition.
19	MUTG	I	Input of muting. When internal register A's ATTM is in "L", and MUTG is in "L" for normal condition; "H" for no sound condition.
20	CRCF	O	Output of CRC check result of sub-code Q.
21	EXCK	I	Clock input for serial output of sub-code.
22	SBSO	O	Serial output of sub-code.
23	SUBQ	O	Q output of sub-code.
24	SCOR	O	Output of sub-code sync. S0 + S1.
25	SQCK	I/O	Reading clock of sub-code Q.
26	SQEX	I	Selection input of SQCK.
27	DOTX	O	Digital out output. (When CXD1130Q or DO is OFF, output $\overline{\text{WFCK}}$.)
28	GFS	O	Output of indication for frame sync lock condition.
29	DB08	I/O	Data terminal of external RAM. DATA8 (MSB).
30	DB07	I/O	Data terminal of external RAM. DATA7.
31	DB06	I/O	Data terminal of external RAM. DATA6.
32	DB05	I/O	Data terminal of external RAM. DATA5.
33	V_{DD}	–	Power supply (+5V).
34	DB04	I/O	Data terminal of external RAM. DATA4.
35	DB03	I/O	Data terminal of external RAM. DATA3.
36	DB02	I/O	Data terminal of external RAM. DATA2.
37	DB01	I/O	Data terminal of external RAM. DATA1 (LSB).
38	RA01	O	Address output of external RAM. ADDR01 (LSB).
39	RA02	O	Address output of external RAM. ADDR02.
40	RA03	O	Address output of external RAM. ADDR03.
41	RA04	O	Address output of external RAM. ADDR04.
42	RA05	O	Address output of external RAM. ADDR05.
43	RA06	O	Address output of external RAM. ADDR06.
44	RA07	O	Address output of external RAM. ADDR07.
45	RA08	O	Address output of external RAM. ADDR08.

Terminal No.	Terminal Symbol	I/O	Terminal Function
46	RA09	O	Address output of external RAM. ADDR09.
47	RA10	O	Address output of external RAM. ADDR10.
48	RA11	O	Address output of external RAM. ADDR11.
49	RAWE	O	Write enable signal output for external RAM. (Active at "L".)
50	RACS	O	Chip select signal output for external RAM. (Active at "L".)
51	C4M	O	Dividing output of X'tal. f = 4.2336 MHz.
52	V_{SS}	—	GND (0V).
53	XTAI	I	X'tal oscillation circuit input. By selecting of mode, f = 8.4672 MHz or 16.9344 MHz.
54	XTAO	O	X'tal oscillation circuit output. By selecting of mode, f = 8.4672 MHz or 16.9344 MHz.
55	MD1	I	Mode selection input 1.
56	MD2	I	Mode selection input 2.
57	MD3	I	Mode selection input 3.
58	SLOB	I	Code switching input for audio data output. At "L" for 2's compliment output; at "H" for offset binary output.
59	PSSL	I	Mode switching input for audio data output. At "L" for serial output; at "H" for parallel output.
60	APTR	O	Control output for aperture compensation. In "H" for R-ch.
61	APTL	O	Control output for aperture compensation. In "H" for L-ch.
62	DA01	O	At PSSL = "H" for DA01 (LSB of parallel voice data) output. At PSSL = "L" for C1F1 output.
63	DA02	O	At PSSL = "H" for DA02 output; PSSL = "L" for C1F2 output.
64	DA03	O	At PSSL = "H" for DA03 output; PSSL = "L" for C2F1 output.
65	DA04	O	At PSSL = "H" for DA04 output; PSSL = "L" for C2F2 output.
66	DA05	O	At PSSL = "H" for DA05 output; PSSL = "L" for C2FL output.
67	DA06	O	At PSSL = "H" for DA06 output; PSSL = "L" for C2PO output.
68	DA07	O	At PSSL = "H" for DA07 output; PSSL = "L" for RFCK output.
69	DA08	O	At PSSL = "H" for DA08 output; PSSL = "L" for WFCK output.
70	DA09	O	At PSSL = "H" for DA09 output; PSSL = "L" for PLCK output.
71	DA10	O	At PSSL = "H" for DA10 output; PSSL = "L" for UGFS output.
72	DA11	O	At PSSL = "H" for DA11 output; PSSL = "L" for GTOP output.
73	V_{DD}	—	Power supply (+5V).
74	DA12	O	At PSSL = "H" for DA12 output; PSSL = "L" for RAOV output.
75	DA13	O	At PSSL = "H" for DA13 output; PSSL = "L" for C4LR output.
76	DA14	O	At PSSL = "H" for DA14 output; PSSL = "L" for $\overline{C21O}$ output.
77	DA15	O	At PSSL = "H" for DA15 output; PSSL = "L" for C21O output.
78	DA16	O	At PSSL = "H" for DA16 (MSB of parallel voice data) output. At PSSL = "L" for DATA output.
79	WDCK	O	Strobe signal output. At DF ON, 176.4 kHz. At CXD1125Q or DF OFF, 88.2 kHz.
80	LRCK	O	Strobe signal output. At DF ON, 88.2 kHz. At CXD1125Q or DF OFF, 44.1 kHz.

Note:

C1F1: ┐ Monitor output for error correction state what C1 is at
C1F2: ┘ decode.

C2F1: ┐ Monitor output for error correction state what C2 is at
C2F2: ┘ decode.

C2FL: Correction state output. Becomes "H" when C2 system in which presently under correction is unable to correct.

C2PO: C2 pointer indication output. Synchronizes with audio data output.

RFCK: Read frame clock output. 7.35 kHz of X'tal system.

WFCK: Write frame clock output. 7.35 kHz when locked on to X'tal system.

$\overline{PLCK}$: VCO/2 output. When locked to EFM signal, f = 4.3218 MHz.

UGFS: Output of unprotected frame sync pattern.

GTOP: Indication output of frame synchro in protected condition.

RAOV: Overflow and underflow indication outputs of ±4 frame jitter absorbing RAM.

C4LR: Strobe signal. At DF ON, 352.8 kHz. At CXD1125Q or DF OFF, 176.4 kHz.

$\overline{C21O}$: Reverse output of C210.

C21O: Bit clock output. At DF ON, 4.2336 MHz. At CXD1125Q or DF OFF, 2.1168 MHz.

DATA: Serial data output of audio signal.

PARTS LIST OF P.W.BOARD

2U-2007 SERVO/SIG. UNIT

Ref. No.	Part No.	Part Name	Remarks
SEMICONDUCTOR GROUP			
IC001	262 0736 008	CXD1125	
IC002	262 0554 002	HM6116P/LP-4/3/2	
IC098	262 0591 007	HD74HC00P	
IC099,100	262 1265 002	TC74HCU04AP	
IC101	262 1008 007	CXA1182S	
IC103	263 0244 001	NJM082D	
IC104	263 0257 001	M5218P	
IC106	262 0729 002	HD74HC08P	
IC301	262 1255 009	M50957-211SP	
IC302	263 0423 000	M51953B	
IC303	262 0632 005	BA6208A	
IC398,399	268 0072 003	ICP-N10	
IC401	263 0432 907	NJM78L05AT	
IC402	263 0567 005	NJM78M05FA	
IC403	263 0553 006	NJM7805FA	
IC404	263 0554 005	NJM7905FA	
IC405~407	268 0074 904	ICP-N20	
TR001,002 201	269 0026 900	RN2202 (10k-10k)T	
TR101,103 107	274 0123 009	2SD1985 (P/Q)	
TR102,104 108	272 0085 002	2SB941A (Q)/(P)	
TR105	274 0036 002	2SD468 (C)	
TR106,401	272 0025 004	2SB582 (C)	
TR109,110	273 0178 019	2SC1740 (S)	
TR112,202	269 0025 901	RN1202 (10k-10k)T	
TR113	271 0101 925	2SA933 (Q)T-70	
D201,406	276 0417 902	1SS270	
D301~306 370,371	276 0432 000	1SS270A	
D401	276 0405 901	S1WB (A) 10	
D402,403	276 0433 902	DSM1A2 TYPE 2	
D404	276 0303 003	HZ6C-2	
D405	276 0224 014	HZ30-2	
RESISTOR GROUP			
R107	244 2051 945	RS14B3A010JST(S)	1ohm, 1W
VR101,102	211 6064 051	V06PB203	20kohm B
VR103	211 6064 064	V06PB102	1kohm B
VR104	211 6064 019	V06PB473	47kohm B
CAPACITOR GROUP			
(Ceramic)			
C102,131 135,143 304,320 321	253 1146 907	CK45F1H103Z	0.01μF/50V
C104,105 154~156 303 510~512	253 9028 904	CK45=1E104M	0.1μF/25V
C110	253 4412 900	CC45SL1H100D	10pF/50V
C123	253 4454 900	CC45SL1H561J	560pF/50V
C141	253 1112 902	CK45B1H102K	0.001μF/50V
C148,149 151	253 3627 000	CC45SL1H101J	100pF/50V
C157	253 3633 007	CC45SL1H181J	180pF/50V
(Electrolytic)			
C002	254 4254 909	CE04W1C100M	10μF/16V
C101	254 4289 738	CE04W1H101MC(AWF)	100μF/50V
C103,115 116,132	254 4260 948	CE04W1H010M	1μF/50V
C113,114	254 4260 951	CE04W1H2R2M	2.2μF/50V
C117,118 140	254 4254 912	CE04W1C220M	22μF/16V
C127	254 4260 980	CE04W1H100M	10μF/50V
C130,134 305~307	254 4252 930	CE04W1A101M	100μF/10V
C146,147	254 4254 925	CE04W1C330M	33μF/16V
C153 402~404	254 4288 001	CE04W1E101MC(AWF)	100μF/25V
C201	254 4254 954	CE04W1C221M	220μF/16V
C301	254 4260 919	CE04W1HR22M	0.22μF/50V
C302	259 0005 005	EECS5R5V104	0.1μF/5.5V
C310	254 4254 967	CE04W1C331M	330μF/16V
C370	254 4260 977	CE04W1H4R7M	4.7μF/50V
C371	254 3056 917	CE04D1H010MBP	1μF/50V
C401	254 4254 941	CE04W1C101M	100μF/16V
C407	254 4261 921	CE04W1H101M	100μF/50V
C409	254 4262 946	CE04W1J470M	47μF/63V
C410,411	254 4261 905	CE04W1H330M	33μF/50V
C504~509	254 4314 771	CE04W1E102MC(AVF)	1000μF/25V
(Film)			
C109	255 1209 905	CQ93M1H562J	0.0056μF/50V
C111	255 1214 903	CQ93M1H153J	0.015μF/50V
C119,120	255 1206 908	CQ93M1H332J	0.0033μF/50V
C121,129 137	255 1212 905	CQ93M1H103J	0.01μF/50V
C122	255 1204 900	CQ93M1H222J	0.0022μF/50V
C133	255 1208 906	CQ93M1H472J	0.0047μF/50V
C138	255 1200 904	CQ93M1H102J	0.001μF/50V
(Metalized)			
C112	256 1034 940	CF93A1H563J	0.053μF/50V
C124,136	256 1034 979	CF93A1H104J	0.1μF/50V
C125	256 1034 911	CF93A1H333J	0.033μF/50V
C128	256 1035 910	CF93A1H224J	0.22μF/50V
OTHER PARTS			
PT151,152	231 8060 002	PULSE TRANS	
CB101	205 0190 065	6P NH CONN. BASE	
CB102	205 0298 006	23P FFC BASE (S)	
CB103,313	205 0343 061	6P CONN. BASE (KR-PH)	

Ref. No.	Part No.	Part Name	Remarks
CB104,311	205 0323 036	3P CONN. BASE (BLK)	
CB105	205 0321 038	3P CONN. BASE (RED)	
CB106	205 0343 032	3P CONN. BASE (KR-PH)	
CB301	205 0375 013	11P CONN. BASE (KR-PH)	
CB302	205 0375 000	10P CONN. BASE (KR-PH)	
CB303	205 0343 058	5P CONN. BASE (KR-PH)	
CB304	205 0323 049	4P CONN. BASE (BLK)	
CB309	205 0323 052	5P CONN. BASE (BLK)	
CB701	205 0343 074	7P CONN. BASE (KR-PH)	
★	417 0253 000	RADIATOR	IC402~404
★	204 8351 007	2P RCA PIN JACK (EMI)	
★	269 0068 007	TOTX174	
★	203 0424 023	1P CONTACT ASS'Y	

2U-1631 SERVO AMP UNIT

Ref. No.	Part No.	Part Name	Remarks
SEMICONDUCTOR GROUP			
IC201	262 0842 002	CXA-1081S	
TR201	272 0025 004	2SB562 (C)	
TR202	273 0178 019	2SC1740 (S)	
RESISTOR GROUP			
R202	245 2033 908	RN14K2E360GT	36ohm, 1/4W
R203	245 2038 903	RN14K2E560GT	56ohm, 1/4W
VR201	211 6057 026	V08PB203	20kohm B
VR202	211 6057 013	V08PB103	10kohm B
CAPACITOR GROUP			
C201	254 4260 061	CE04W1H3R3M (SME)	3.3μF 50V
C202	254 4254 048	CE04W1C101M (SME)	100μF 16V
C203	253 3617 007	CC45SL1H390J	39pF 50V
C204	255 1120 055	CQ93M1H272J	0.0027μF 50V
C205	253 1024 003	CK45F1H103Z	0.01μF 50V
C206	254 4252 037	CE04W1A101M (SME)	100μF 10V
C207	254 4260 032	CE04W1HR47M (SME)	0.47μF 50V
C208,209	255 1121 025	CQ93M1H103J	0.01μF 50V
C210,211	256 1034 018	CF93A1H333J	0.033μF 50V
OTHER PARTS			
	205 0298 051	20P FFC CONN. BASE (S)	
	205 0298 006	23P FFC BASE (S)	

2U-1688 DISPLAY UNIT

Ref. No.	Part No.	Part Name	Remarks
SEMICONDUCTOR GROUP			
D307~312	276 0049 011	1S2076A	
OTHER PARTS			
	212 4388 004	TACT SWITCH	
	499 0088 002	QH3031H0	
	393 4065 008	FIP11BHM7	
CC301	204 6200 008	11P KR-DA CONN. CORD	
CC302	204 2297 002	10P KR-DA CONN. CORD	
CC303	203 8228 001	5P KR-DA CONN. CORD	
CC304	205 0323 049	4P CONN. BASE (BLK)	

2U-2008 AUDIO UNIT

Ref. No.	Part No.	Part Name	Remarks
SEMICONDUCTOR GROUP			
IC102	262 1063 000	SM5803AP	
IC501,601	262 1180 006	CF37606	
IC502,503 602,603	262 0904 005	HD74HC164P	
IC504,505 518,604 605,618	262 0594 004	HD74HC74P	
IC506,507 606,607	262 1253 001	PCM58KP	
IC508,510 608,610	263 0710 001	TC74HC4066AP	
IC509,511 609,611	262 0864 006	μPC4570C	
IC512,514 612,614	263 0127 005	NE5534AN	
IC513,515 613,615	263 0360 008	NE5532	
IC517,617	262 1265 002	TC74HCU04AP	
IC519,520 619,620	263 0432 907	NJM78L05AT	
IC702	263 0198 005	NJM4556D	
IC710	263 0554 005	NJM7905FA	
IC711	263 0553 006	NJM7805FA	
TR504~508 604~608	273 0253 918	2SC2878 (A/B)	
TR701	271 0101 925	2SA933 (Q)T-70	
RESISTOR GROUP			
R521,522 525,526 529,530 533,534 570,571 574,575 620,621 624,625 628,629 632,633 670,671 674,675	254 2375 912	RN14K2E102GT(5)	1kohm, 1/4W (Metal Film)
R537,538 562,636 637,661	241 0209 004	RD14B2H103J	10kohm, 1/2W
R539,540 638,639	241 0200 003	RD14B2H432J	4.3kohm, 1/2W
R541,542 640,641	241 0193 000	RD14B2H222J	2.2kohm, 1/2W
R543,642	241 0205 008	RD14B2H682J	6.8kohm, 1/2W
R544,643	241 0198 005	RD14B2H362J	3.6kohm, 1/2W
R545,644	241 0195 008	RD14B2H272J	2.7kohm, 1/2W
R546,547 645,646	241 0201 002	RD14B2H472J	4.7kohm, 1/2W
R548,647	241 0188 002	RD14B2H132J	1.3kohm, 1/2W
R554,555 558,559 653,654 657,658	241 0172 005	RD14B2H301J	300ohm, 1/2W
R563,568 662,668	241 0165 009	RD14B2H151J	150ohm, 1/2W
VR501,502 505,506 601,602 605,606	211 6075 008	V06PB104(CERMET)	100kohm B
VR151	211 0540 005	V1620V25FA103M	10kohm A
CAPACITOR GROUP			
(Ceramic)			
C500	253 1112 902	CK45B1H102KT	0.001μF/50V
C501,504 567,601 603,604 667,713 800,801	253 1184 901	CK93E1H104MT(TCD)	0.1μF/50V
C502,602	253 4423 902	CC45SL1H300JT	30pF/50V
C505,605	253 4535 955	CC45SL1H050CT(DD-3)	5pF/50V
C574,674	253 4428 907	CC45SL1H470JT	47pF/50V
(Electrolytic)			
C507,514 515,517 518,607 614,615	254 4289 738	CE04W1H101MC(AWF)	100μF/50V
C505 509~512 516~518 605 609~612 616~618	254 4356 001	CE04W1H100(ARS)	10μF/50V
C519,522 524,527 538,539 544,547 619,622 624,627 638,639 644,647	254 4289 068	CE04W1H471M(AWF)	470μF/50V
C750,850	254 4256 907	CE04W1E100M	10μF/25V
★	254 4256 088	CE04W1E102M	1000μF/25V
(Film)			
C520,525 620,625	255 4235 727	CQ93P2A271JC(NH)	270pF/100V
C521,526 621,626	255 4235 714	CQ93P2A101JTC(NH)	100pF/100V
C529,629	255 4232 018	CQ93P2A181JC(NH)	180pF/100V

Ref. No.	Part No.	Part Name	Remarks
C530,630	255 4232 005	CQ93P2A821JC(NH)	0.0082µF/100V
C533,535	255 4235 060	CQ93P2A272JC(NH)	0.0027µF/100V
536,633			
635,636			
C542,642	255 6167 000	CQ09S2B103K(B)	0.1µF/125V
C543,546	255 4232 021	CQ93P2A390JC(NH)	39pF/100V
643,646			
C545,548	255 4232 937	CQ93P2A102JT(NH)	0.001µF/100V
645,648			
OTHER PARTS			
X500	399 0036 013	X'TAL (16,9344MHz)	
RL501,601	214 0097 007	RELAY	
CB302	205 0323 052	5P CONN. BASE (BLK)	
CB311	205 0343 032	3P CONN. BASE	
703,707		(KR-PH)	
CB700,702	205 0343 061	6P CONN. BASE	
706,709		(KR-PH)	
CB701	205 0343 074	7P CONN. BASE	
		(KR-PH)	
CB705	205 0190 049	4P NH CONN. BASE	
CB708	205 0343 045	4P CONN. BASE	
		(KR-PH)	
★	204 8265 009	4P RCA PIN JACK	
★	204 8264 000	H/P JACK (AU)	
★	205 0428 009	3P CANNON CONN.	
★	212 4691 005	ROTARY SWITCH	
★	212 4703 003	SLIDE SWITCH	
★	001 0006 007	BUS BAR	
★	203 0294 017	1P BOARD IN WIRE	
★	203 0424 007	1P CONTACT ASS	
★	203 0424 010	1P CONTACT ASS	

2U-1632 POWER SUPPLY UNIT

Ref. No.	Part No.	Part Name	Remarks
SEMICONDUCTOR GROUP			
IC811	276 0405 008	SIWB (A) 10	
IC812,813	263 0561 001	NJM7915FA	
IC814	268 0560 002	NJM7815FA	
CAPACITOR GROUP			
⚠ C801-803	253 8014 003	CK45F2GA103M	0.01µF 400V
C810,814	254 4289 068	CE04W1H101MC	100µF 50V
815		(AWF)	
C811,812	254 6138 007	CE64W1H472M	4700µF 50V
OTHER PARTS GROUP			
⚠ CH801	239 8019 002	LINE FILTER COIL	
	415 0299 000	CONDENSER COVER	
⚠ F801	206 1015 045	FUSE (315MA)	Europe, U.K. Australia
⚠ F801	206 1039 018	FUSE (800MA)	U.S.A., Canada
⚠ ★	202 0022 008	FUSE HOLDER	
★	513 1451 002	FUSE LABEL (315MA)	Europe, U.K. Australia
★	513 0637 092	FUSE LABEL (800MA)	U.S.A., Canada
★	417 0253 000	RADIATOR	IC813, 814
⚠ SW801	212 0286 003	POWER SWITCH	
⚠ SW801,	205 0217 032	3P CONN. BASE (ULTR)	
802			
CB811	205 0190 065	6P NH CONN. BASE	
CB812	205 0190 049	4P NH CONN. BASE	
★	205 0190 036	3P NH CONN. BASE	

2U-1644 MOTOR DRIVE UNIT

Ref. No.	Part No.	Part Name	Remarks
SEMICONDUCTOR GROUP			
IC1	263 0424 902	M5218FP (TAPE)	
TR1,4	272 0081 909	2SB766S (TAPE)	
TR2,5	274 0114 908	2SD874R (TAPE)	
T3,6	279 0024 909	FMY1-T99	
H1,2	268 0053 022	HW-101C (Q,R)	
RESISTOR GROUP			
VR1	211 8003 913	K05=B202	
R1,8	247 1006 961	RM73B2B471JT	470ohm
R2	247 0006 904	RM73B--271JT	270ohm
R3	247 0009 985	RM73B--103JT	10kohm
R4,11	247 1012 926	RM73B2B104JT	100kohm
R5,12	247 0012 927	RM73B--104JT	100kohm
R6,7,13,14	247 1008 985	RM73B392JT	3.9kohm
R9	247 1006 903	RM73B2B271JT	270ohm
R10	247 1009 984	RM73B2B103JT	10kohm
R15	247 1007 902	RM73B2B681JT	680ohm
CAPACITOR GROUP			
C1	257 0006 927	CC73SL1H471JT	470pF 50V
C3	257 1006 926	CC73SL1H471JT	470pF 50V
C5,7	257 0014 935	CK73F1E104ZT	0.1µF 25V
OTHER PARTS			
	346 0070 004	ROTOR COIL	

NOTE FOR PARTS LIST

- Part indicated with the mark " ⦿ " are not always in stock and possibly to take a long period of time for supplying, or in some case supplying of part may be refused.
- When ordering of part, clearly indicate "1" and "l" (i) to avoid mis-supplying.
- Ordering part without stating its part number can not be supplied.
- Part indicated with the mark "★" is not illustrated in the exploded view.
- Not including Carbon Film ±5%, 1/4W Type in the P.W.Board parts list. (Refer to the Schematic Diagram for those parts.)

WARNING:

Parts marked with this symbol ⚠ ▨ have critical characteristics.
Use ONLY replacement parts recommended by the manufacturer.

- **Resistors**

Ex.: RN 14K 2E 182 G FR

Type	Shape and performance	Power	Resistance	Allowable error	Others
RD : Carbon		2B : 1/8W		F : ±1%	P : Pulse-resistant type
RC : Fixed		2E : 1/4W		G : ±2%	NL : Low noise type
RS : Metallic film		2H : 1/2W		J : ±5%	NB : Non-burning type
RW : Winding		3A : 1W		K : ±10%	FR : Fuse resistor
RN : Metal film		3D : 2W		M : ±20%	F : Lead wire forming
RK : Metal mixture		3F : 3W			
		3H : 5W			

Resistance
1 8 2 ⇨ 1800Ω = 1.8kΩ
2-digit effective number, decimal point indicated by R.
Indicates number of zeros after effective number
• Units: Ω

- **Capacitors**

Ex.: CE 04W 1H 2R2 M BP

Type	Shape and performance	Dielectric strength	Capacity	Allowable error	Others
CE : Aluminum foil electrolyte		0J : 6.3V		F : ±1%	HS : High stability type
CA : Aluminum solid electrolyte		1A : 10V		G : ±2%	BP : Non-polar type
CS : Tantalum electrolyte		1C : 16V		J : ±5%	HR : Ripple-resistant type
CQ : Film		1E : 25V		K : ±10%	DL : For charge and discharge
CK : Ceramic		1V : 35V		M : ±20%	HF : For assuring high frequency
CC : Ceramic		1H : 50V		Z : +80% −20%	U : UL part
CP : Oil		2A : 100V		P : +100% −0%	C : CSA part
CM : Mica		2B : 125V		C : ±0.25pF	W : UL-CSA type
CF : Metallized		2C : 160V		D : ±0.5pF	F : Lead wire forming
CH : Metallized		2D : 200V		∞ : Others	
		2E : 250V			
		2H : 500V			
		2J : 630V			

Capacity
2 R 2 ⇨ 2.2µF
2-digit effective number, decimal point indicated by R.
1-digit effective number, decimal point indicated by R.
• Units: µF, (for P, pF (µµF)
• When the dielectric strength is indicated in AC, "AC" is included after the dielectric strength value.

PARTS LIST OF EXPLODED VIEW

Ref. No.	Part No.	Part Name	Remarks
1	411 0770 705	CHASSIS	
2	411 0771 403	CENTER CHASSIS	
3	—	—	
4	105 0769 303	SUB BOTTOM COVER	
5	411 0772 208	FRONT CHASSIS	
6	105 0885 216	BACK PANEL	
7	—	—	
8	146 0970 106	BACK FOOT	
9	105 0768 401	BOTTOM COVER	
10	104 0155 118	FOOT ASS'Y	
11	403 0047 013	BOTTOM WEIGHT	
12	412 2470 103	H/P BRACKET	
13	146 0954 708	MECHA CHASSIS	
14	2U-1632	POWER SUPPLY NIT	
15	113 1306 012	P.SW LEVER ASS'Y	
16	FG-621	CD MECHA UNIT	
17	2U-2008	AUDIO UNIT	
18	2U-2007	SERVO & SIG. UNIT	
19	144 1765 110	SIDE PANEL(L)ASS'Y	
20	144 1767 118	SIDE PANEL(R)ASS'Y	
21	2U-1688	DISPLAY UNIT	
22	144 1956 314	FRONT PANEL ASS'Y	
23	143 0582 003	REMOTE SHEET	
24	143 0548 209	WINDOW	
25	113 1304 111	OP/CL KNOB ASS'Y	
26	113 1059 314	TEN KEY KNOB	
27	113 1055 318	KNOB BASE ASS'Y	
28	144 1961 118	TRAP DOOR	
29	401 0167 117	HINGE (L)	
30	401 0168 116	HINGE (R)	
31	146 0952 441	SIDE ESC(L)ASS'Y	
32	146 0963 249	SIDE ESC(R)ASS'Y	
33	425 0222 016	BEARING	
34	113 1060 112	DOOR OPEN KNOB	
35	143 0549 101	DISPLAY SHEET	
36	412 2653 001	TOP COVER SPACER	
37	—	—	
38	113 1050 216	ROTARY KNOB	
39	144 1958 011	LOADER PANEL	
⚠ 40	206 2063 009	AC CORD	Europe
40	206 2061 001	AC CORD	U.S.A.
40	206 2024 006	AC CORD	U.K.
40	206 2025 005	AC CORD	Australia
⚠ 41	233 5579 110	POWER TRANS	Europe, U.K Australia
41	233 5577 112	POWER TRANS	U.S.A.
⚠ 42	233 5580 112	POWER TRANS	Europe, U.K Australia
42	233 5578 111	POWER TRANS	U.S.A.
43	513 1606 006	POWER TRANS LABEL (A)	
44	513 1607 005	POWER TRANS LABEL (B)	
45	—	—	
46	477 0096 007	PUSH RIVET	
47	421 0505 003	MINI DAMPER	
48	144 1959 010	ESC BAR (A)	
49	144 1960 012	ESC BAR (B)	
50	463 0182 080	SPRING	
51	513 1411 000	LOCK CAUTION BOTTOM	
52	443 0829 006	WASHER	
53	GEN1038	SPACER (T) SUB	
54	463 0582 101	SPRING PLATE	
55	104 0034 019	STOPPER	
⚠ 56	212 0286 003	POWER SWITCH	
57	205 0428 009	3P CANNON CONN.	
58	204 8265 009	4P PIN JACK	
59	204 8351 007	2P PIN JACK	
60	269 0068 007	TOTX 174	OPTICAL OUT
61	393 4065 008	FIP11BHM7	DISPLAY
62	204 8264 000	H/P JACK	
63	211 0540 005	V1620V25FA103M	LINE OUT
64	212 4691 005	ROTARY SWITCH	DIGITAL OUT SW
65	443 0855 106	BOSS CAP	
66	114 0109 103	ROTARY KNOB GUIDE	
67	462 0095 103	BLIND WASHER	
68	146 1112 112	LOADER SUB PANEL	
69	212 4703 003	SLIDE SWITCH	
70	477 0265 074	WASHER	
71	143 0556 000	REMOTE SHEET	
72	122 0084 009	SPACER	
73	461 0269 143	DAMP SHEET	
74	461 0590 100	EARTH PLATE(ESC)	
75	129 0151 001	TRANS. DUMPER	
76	443 0987 003	TRANS. COLLAR	
⚠ 77	445 0020 005	CORD BUSH	
78	—	—	
79	GEN1078	SHIELD COVER SUB	
82	146 9086 004	SCREW CAP	
83	144 1728 225	TOP COVER (A)	
84	144 1750 125	TOP COVER (B)	
85	473 7007 071	4×12 CBTS(S)ZNB	
101	473 7015 018	3×8 CBTS(S)-B	
102	471 3404 012	4×8 CBS-Z	
103	—	—	
104	—	—	
105	—	—	
106	—	—	
107	473 7007 013	4×10 CBTS(S)-B	
108	473 7022 001	2×4 CPTS(S)-Z	
109	473 7003 017	3×8 CFTS(S)-B	
110	473 7502 013	4×10 CBTS(P)-Z	
111	—	—	
112	471 3302 017	3×5 CBS	
113	473 7006 030	3×12 CBTS(S)-B	
114	471 3301 021	3×4 CBS	
115	—	—	
116	—	—	
117	—	—	
118	471 3830 000	3×6 CBTS-CU	
119	473 3827 006	3×8 CBTS(Z)-CU	
120	473 7002 034	3×6 CBTS(S)-B	
121	473 7508 017	3×10 CBTS(P)-B	
122	477 0276 018	EARTH SCREW	
123	477 0262 006	SPECIAL SCREW	
124	471 3403 012	4×8 CBTS-Z	
125	473 8034 001	3×8 CBTS(B)-CU	
126	473 7518 007	3×10 CBTS(P)-CU	
127	471 3832 008	3×8 CBTS-CU	

PARTS LIST OF PACKING & ACCESSORIES

Ref. No.	Part No.	Part Name	Remarks
	505 0131 076	CABINET COVER	
	503 0695 008	CUSHION ASS'Y	
	503 0696 007	CUSHION (L)	
	503 0697 006	CUSHION (R)	
	501 1273 054	CARTON CASE	
	502 0707 003	UPPER CARTON	
	505 0038 030	POLY COVER	
	511 1955 007	INST. MANUAL	Except U.S.A.
	511 1966 009	INST. MANUAL (EU)	U.S.A. only
	511 1969 006	SWEDISH INST. MANUAL	Europe only
	203 2204 005	PIN CORD	
	529 0073 004	MINI DRIVER	
	499 0151 007	RC-222	

EXPLODED VIEW

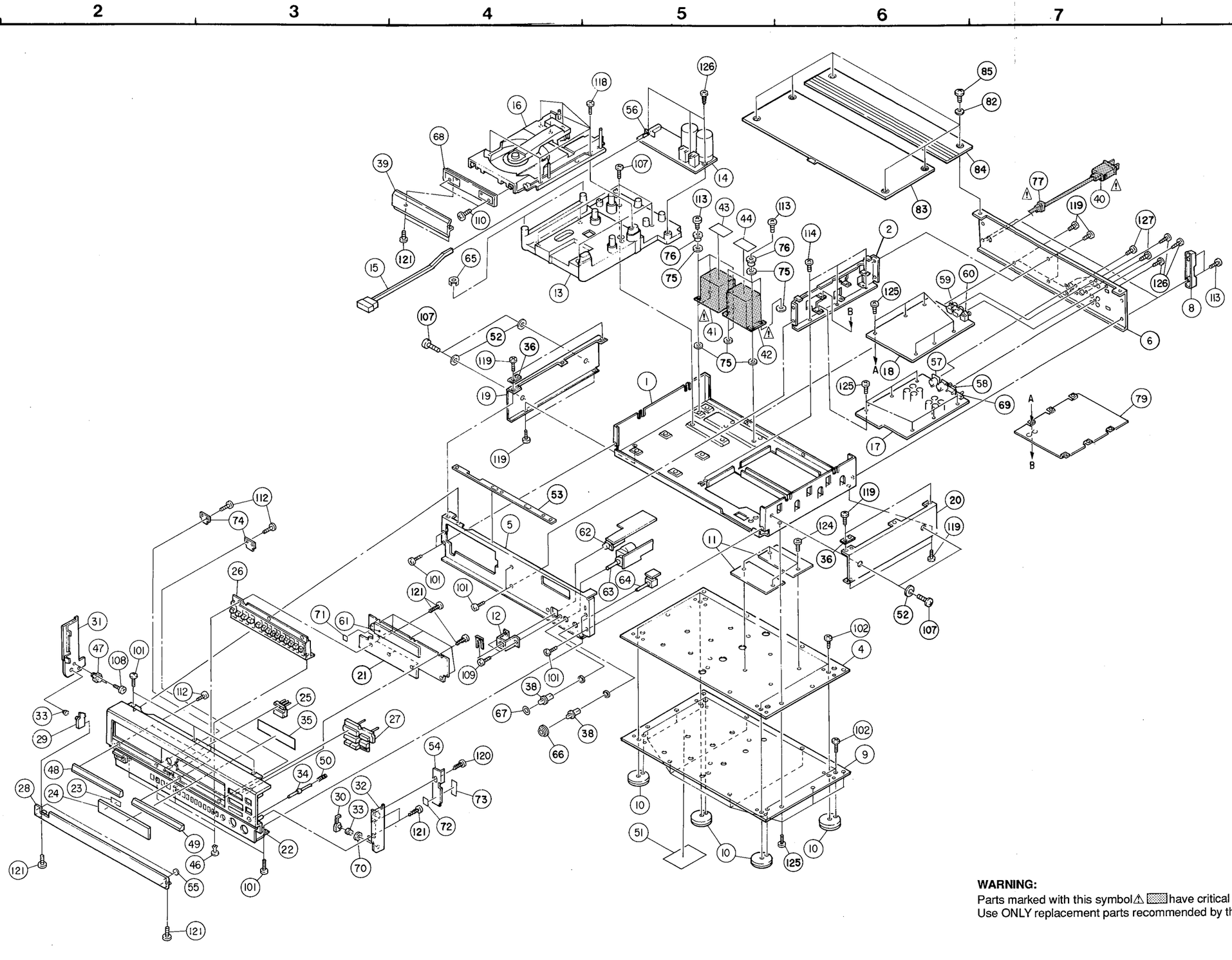

EXPLODED VIEW OF FG-621 MECHANISM UNIT

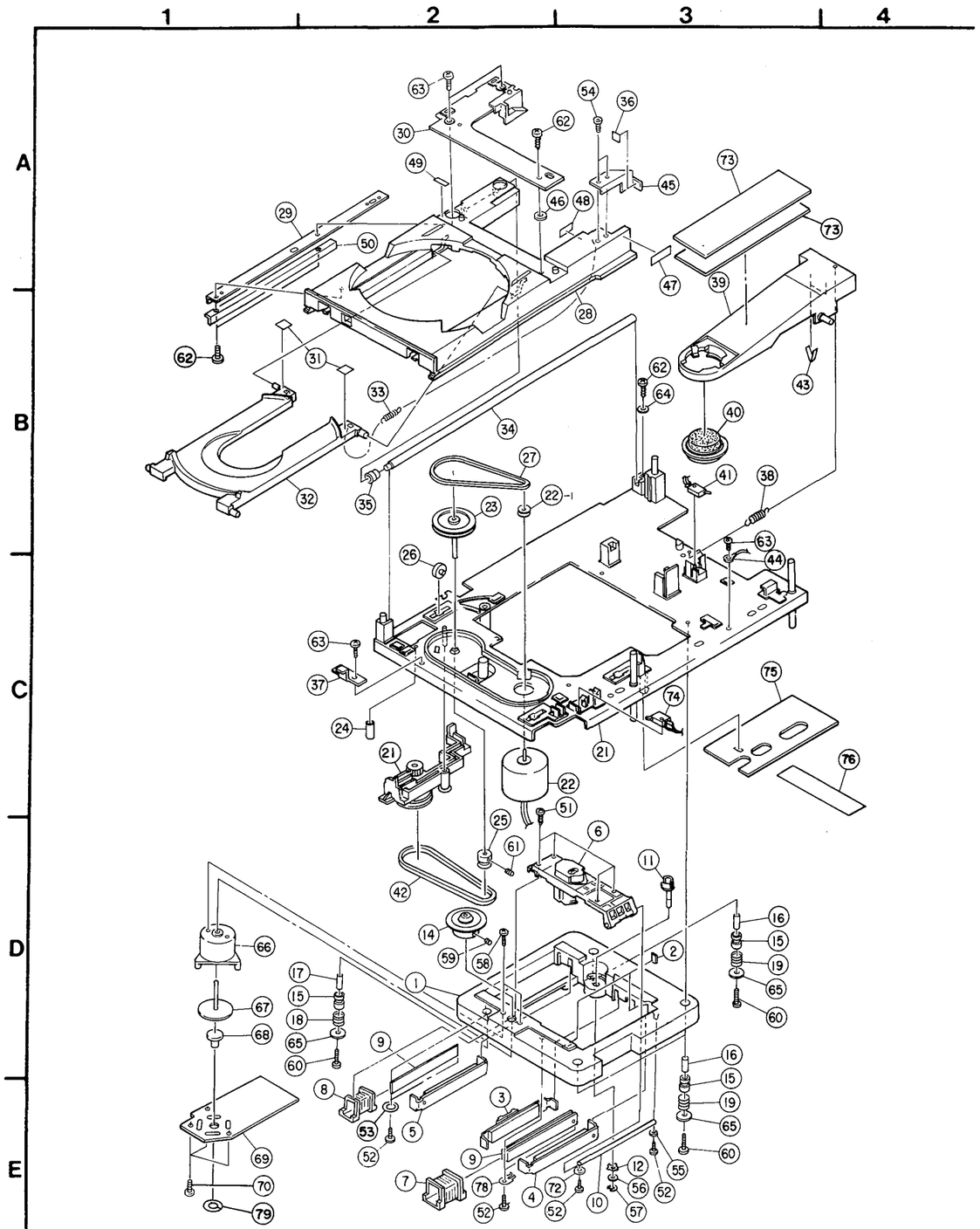

PARTS LIST OF FG-621 MECHA UNIT

Ref. No.	Part No.	Part Name	Remarks
1	315 0338 302	P.U. HOUSING	
2	461 0409 000	P.U. STOPPER	
3	PMO1A15	MAGNET SUB ASS'Y	
4	PMO1A20	MAGNET SUB ASS'Y	
5	PMO1A21	MAGNET SUB ASS'Y (C)	
6	499 0078 009	PICK-UP KSS151A	
7	239 0014 209	M. COIL ASS'Y	
8	239 0015 208	G. COIL ASS'Y	
9	433 0480 008	YOKE (B)	
10	443 0617 302	P.U. SHAFT	
11	421 0431 300	STOPPER COLLAR	
12	315 8451 003	FRICTION WASHER	
14	421 0423 224	TURNTABLE ASS'Y	
15	462 0083 005	H. DAMPER	
16	433 0513 108	COLLAR (D)	
17	433 0514 107	COLLAR (C)	
18	463 0514 001	COIL SPRING (C)	
19	463 0515 000	COIL SPRING (D)	
21	411 0715 304	BASE PLATE GEN. ASS'Y	
22	PLO1A34	LOADING M.SUB ASS'Y	
23	421 0439 108	GEAR PULLEY ASS'Y	
24	462 0084 020	TUBE (ϕ5.5)	
25	421 0425 002	MOTOR PULLEY	
26	425 0170 003	SLIDER ROLLER	
27	423 0046 209	BELT (A)	
28	431 0267 416	LOADER FRAME	
29	412 2177 105	LOADER BRACKET	
30	411 0831 000	LOADER GUIDE	
31	122 0110 083	HIMERON SHEET	
32	431 0284 114	DISC TRAY ASS'Y	
33	463 0574 009	D. TRAY SPRING	
34	443 0874 006	LOADER RAIL	
35	462 0084 004	TUBE (ϕ5)	
36	461 0449 002	LOADER CUSHION	
37	412 2512 003	BRACKET	
38	463 0505 104	CLAMPER SPRING	
39	433 0477 406	CLAMPER ARM	
40	PCO1A27	CLAMP PRESS SUB ASS'Y	
41	212 4650 004	LEAF SW.	
42	423 0047 004	BELT (B)	
43	122 0110 096	HIMERON SHEET	
44	203 0240 032	1P CONTACT CORD	
45	411 1007 008	LOADER STOPPER	
46	125 0042 008	GUIDE SPACER	
47	125 0039 008	STOPPER SPACER	
48	122 0163 014	SPACER (M)	
49	122 0163 001	SPACER (M)	
50	412 2589 007	LOADER SPACER	
51	473 8010 009	M1.7×4 #0(W) ZNIB	
52	473 8014 005	3×8 CBTS (H-L) ZNB	
53	475 1140 008	3 WASHER	
54	477 0096 007	PUSH RIVET	
55	475 1003 006	3 WASHER	
56	475 1005 017	4W BKNI	
57	441 0856 002	G RING	
58	471 3812 002	2×8 CBS B	
59	474 4300 004	2.6×4 BSS (A)	
60	471 1807 022	3×18 CPS BK	
61	474 4300 033	2.6×6 BSS (A)	
62	473 7508 017	3×10 CBTS (P)-B	
63	473 7002 005	3×6 CBTS(S)-Z	
64	475 1005 004	4W	
65	412 2296 002	F COVER	
66	346 0067 305	MOTOR HOUSING ASS'Y	
67	PRO1A93	ROTOR ASS'Y	
68	431 0271 004	THRUST METAL	
69	2U-1644	MOTOR DRIVE UNIT	
70	471 3302 017	3×5 CBS	
71	—	—	
72	441 0857 001	P. RING	
73	461 0269 114	DAMP SHEET	
74	212 4650 004	LEAF SW	
75	2U-1631	SERVO AMP UNIT	
76	209 0117 008	23P FFC	
77	—	—	
78	441 0993 004	YOKE HOLDER	
79	477 0298 038	CUT WASHER	

P.W.BOARD

2U-2008 AUDIO UNIT

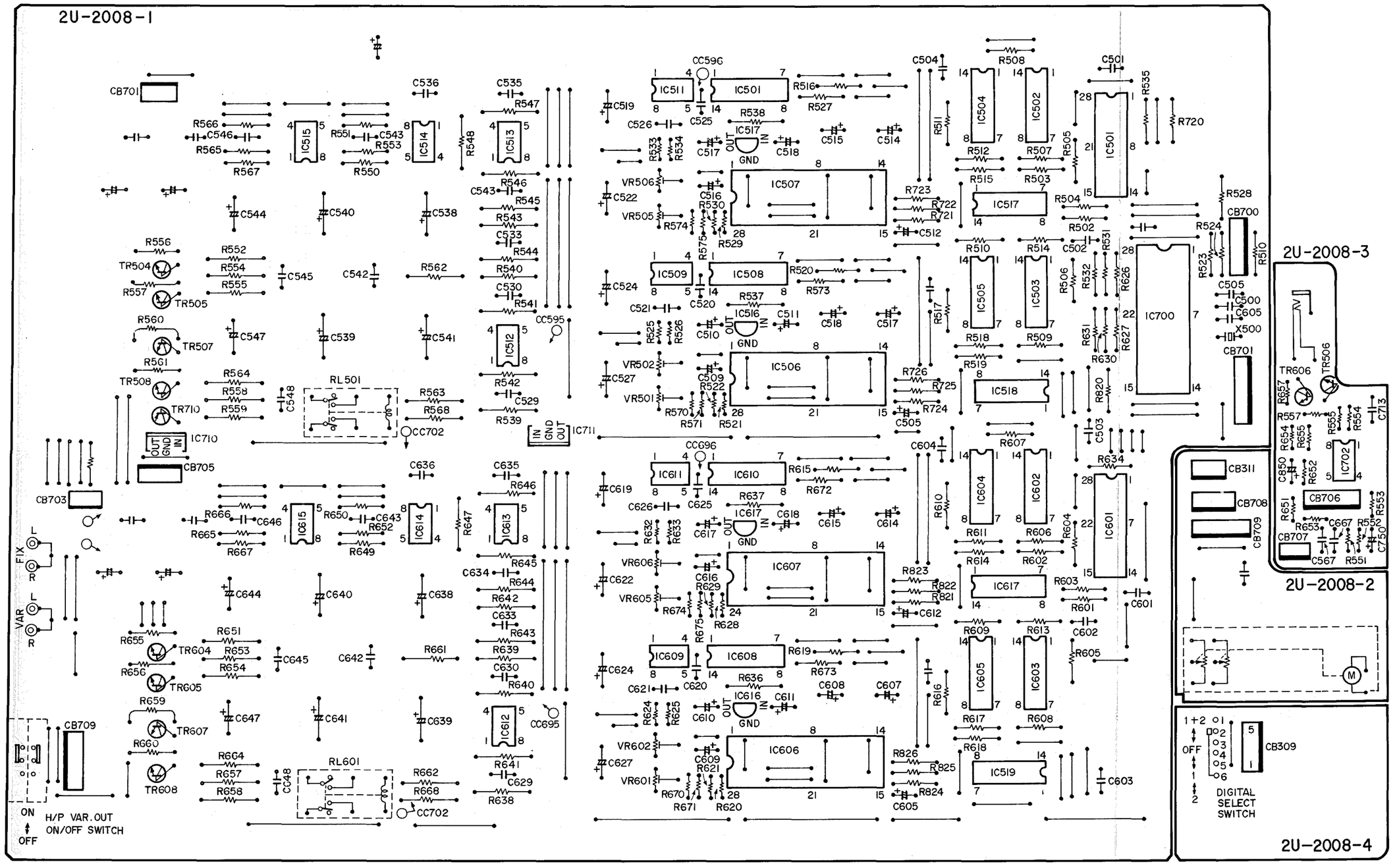

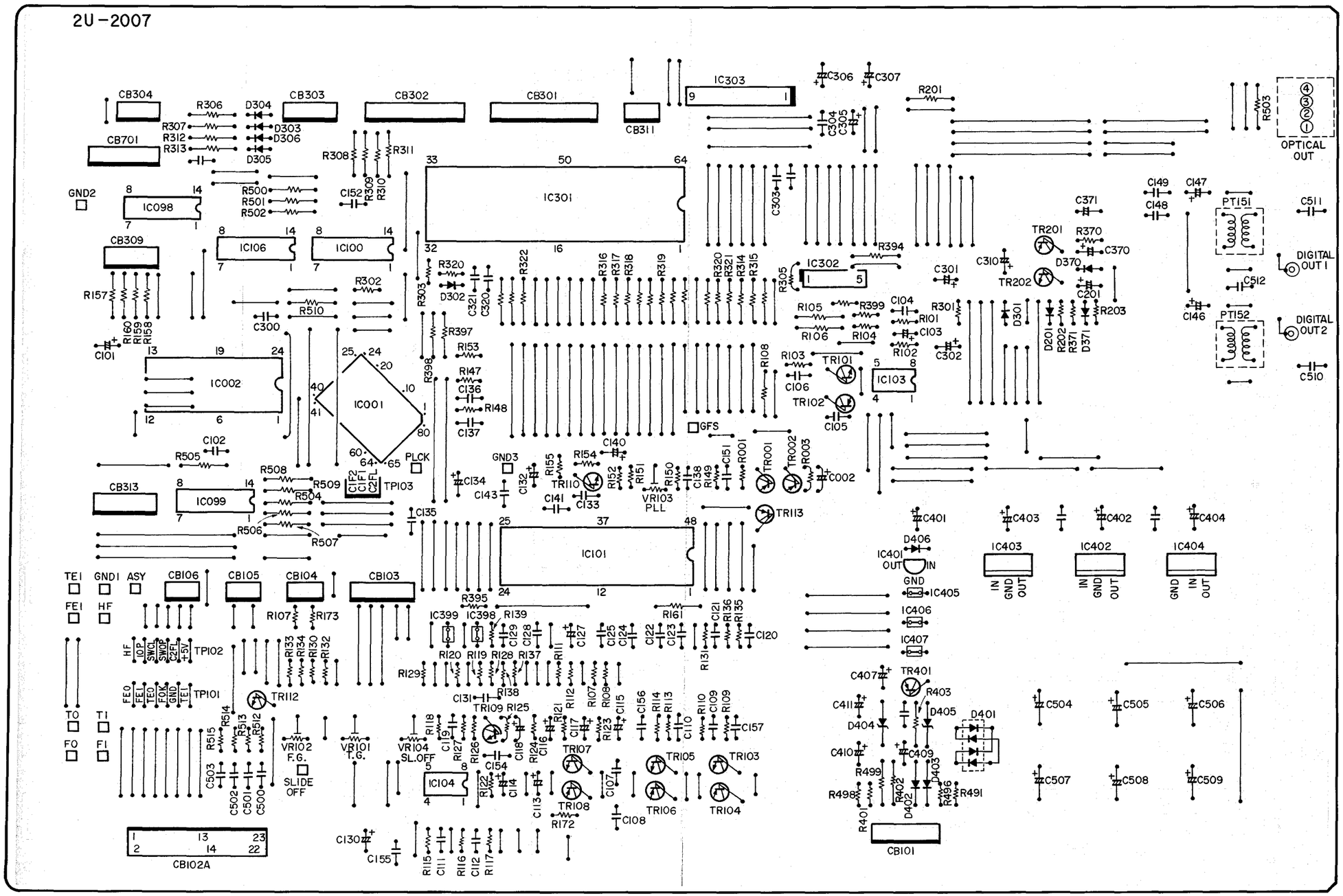
2U-2007
CB304
CB303
CB302
CB301
CB311
IC303
CB701
IC098
CB309
IC106
IC100
IC301
IC302
IC002
IC001
IC099
IC101
IC103
IC104
IC399
IC398
IC401
IC403
IC402
IC404
IC405
IC406
IC407
CB313
CB106
CB105
CB104
CB103
CB102A
CB101
OPTICAL OUT
DIGITAL OUT 1
DIGITAL OUT 2
PT151
PT152
TR201
TR202
TR101
TR102
TR113
TR401
TR110
TR109
TR107
TR108
TR105
TR106
TR103
TR104
TP101
TP102
TP103
TE1
GND1
ASY
FE1
HF
TO
TI
FO
FI
GND2
GND3
GFS
PLCK
VR103 PLL
VR102 F.G.
VR101 T.G.
VR104 SL.OFF
SLIDE OFF
IC401 OUT IN GND
IN GND OUT
GND IN OUT

2U-1688 DISPLAY UNIT

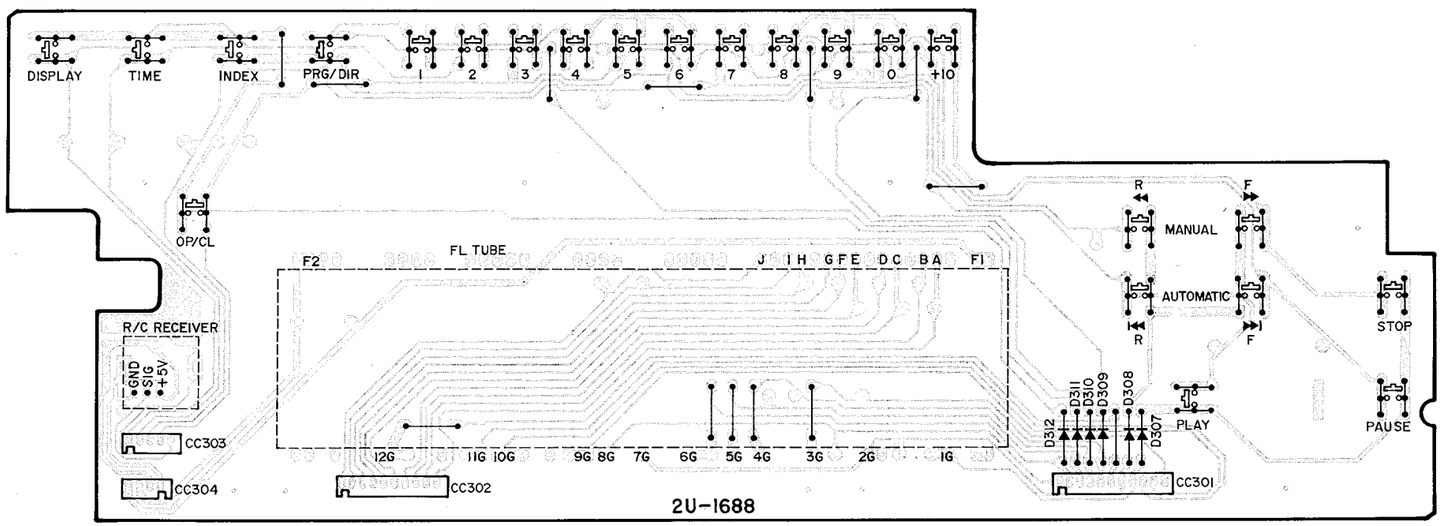

2U-1632 POWER SUPPLY UNIT

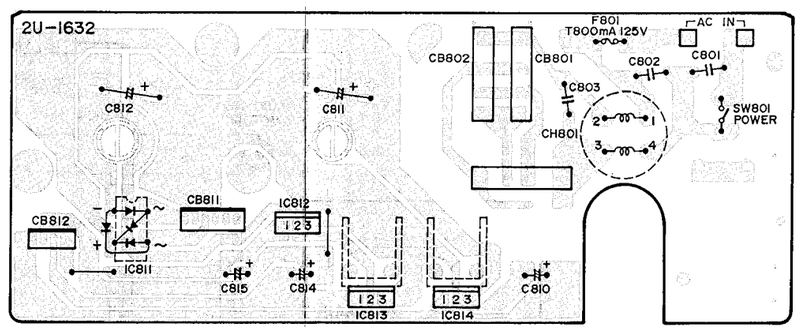

2U-1631 SERVO AMP UNIT

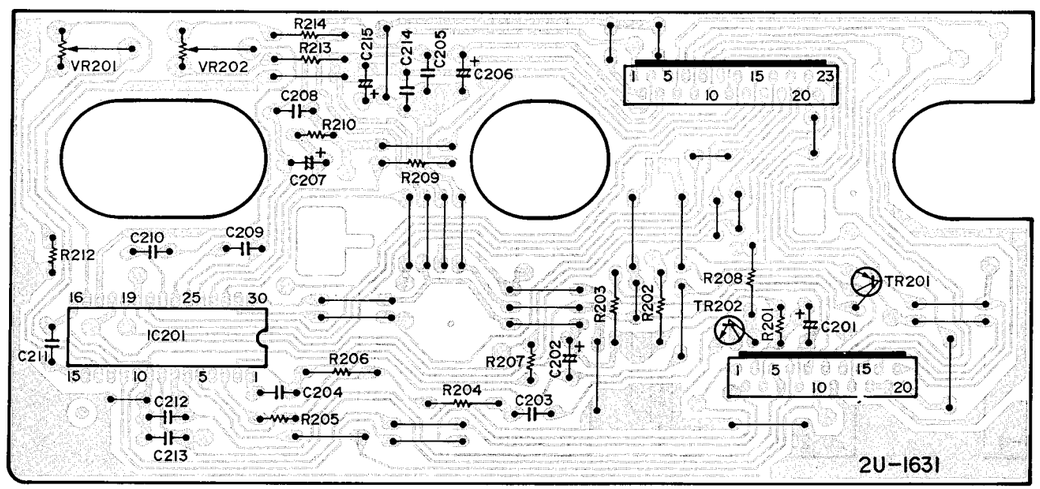

2U-1644 MOTOR DRIVE UNIT

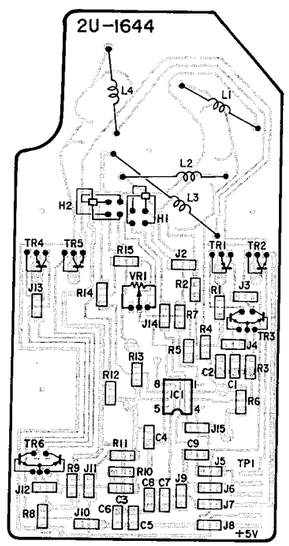

WIRING DIAGRAM

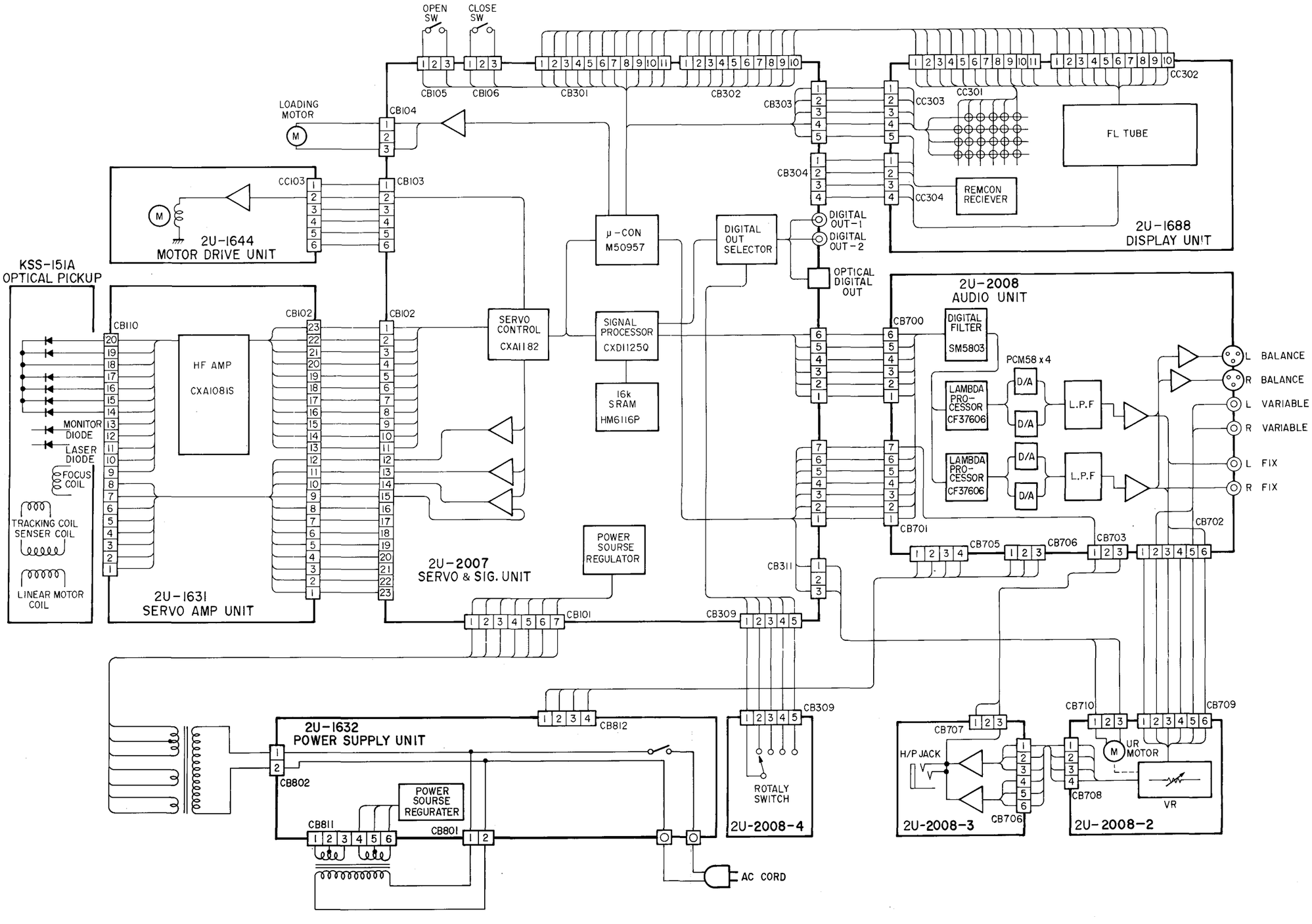

- IC's

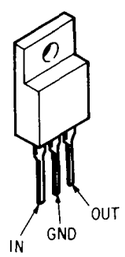

NJM7805A
NJM7815A
NJM78M05A

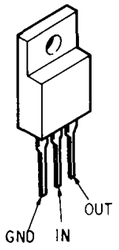

NJM7905A
NJM7915A

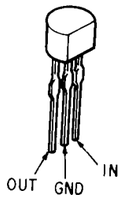

NJM78L05A

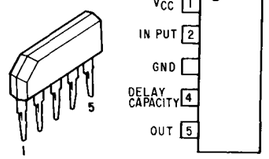

M51953B

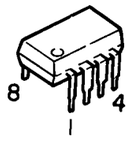

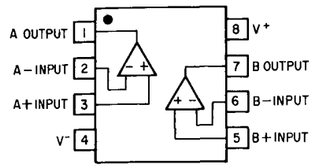

NJM082D
NJM4556D
NE5532
M5218P
μPC4570C

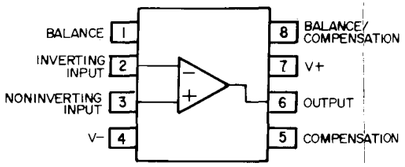

NE5534

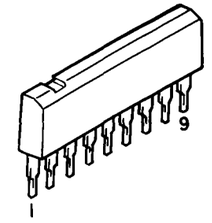

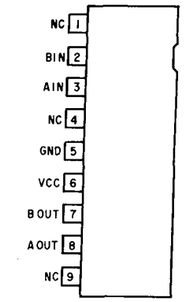

BA6208A

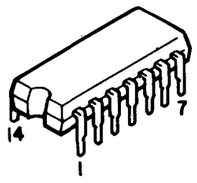

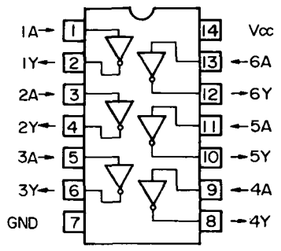

HD74HCU04P

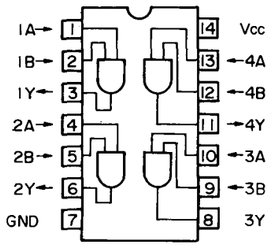

HD74HC08P

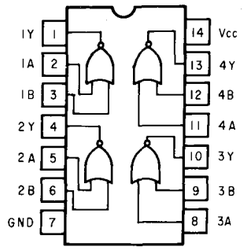

TC74HC02P

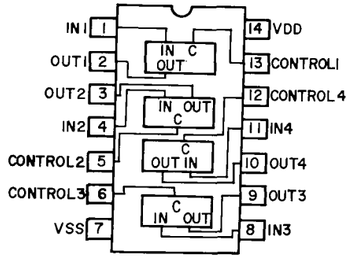

TC74HC4066

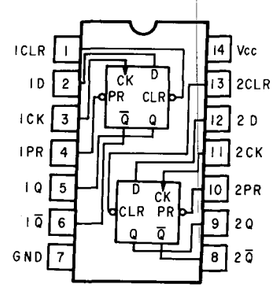

HD74HC74P

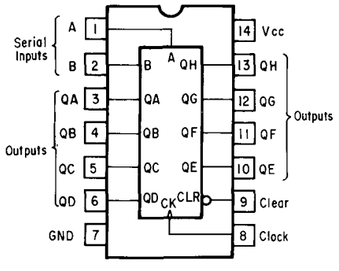

HD74HC164P

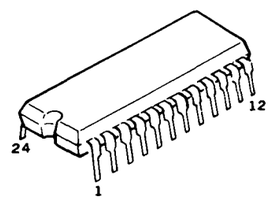

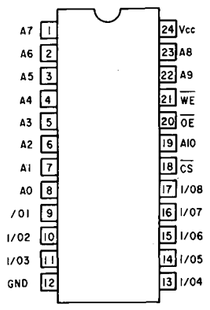

HM6116P-4

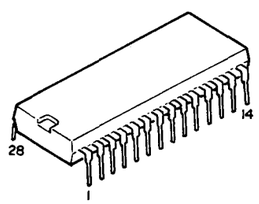

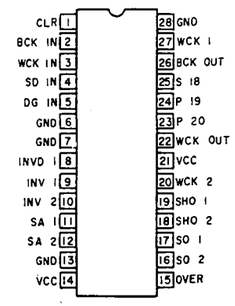

CF37606

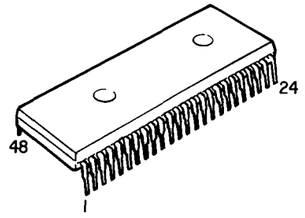

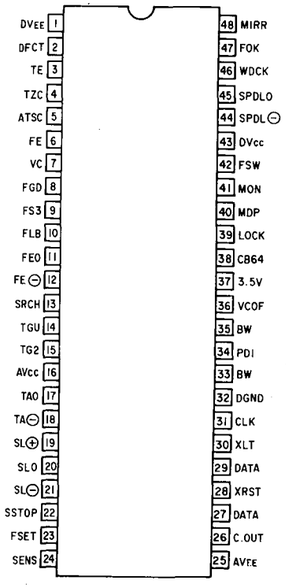

CXA1182AS

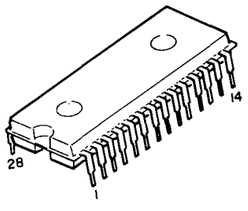

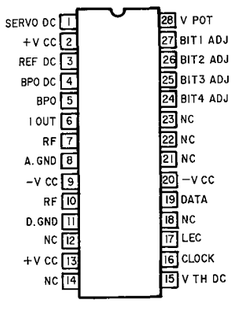

PCM58KP

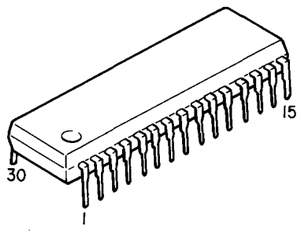

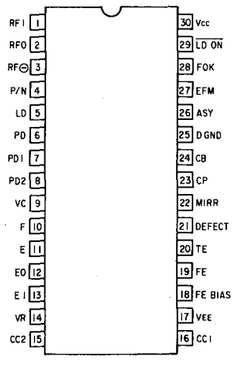

CXA1081S

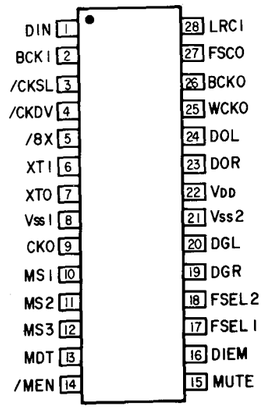

SM5803AP-1

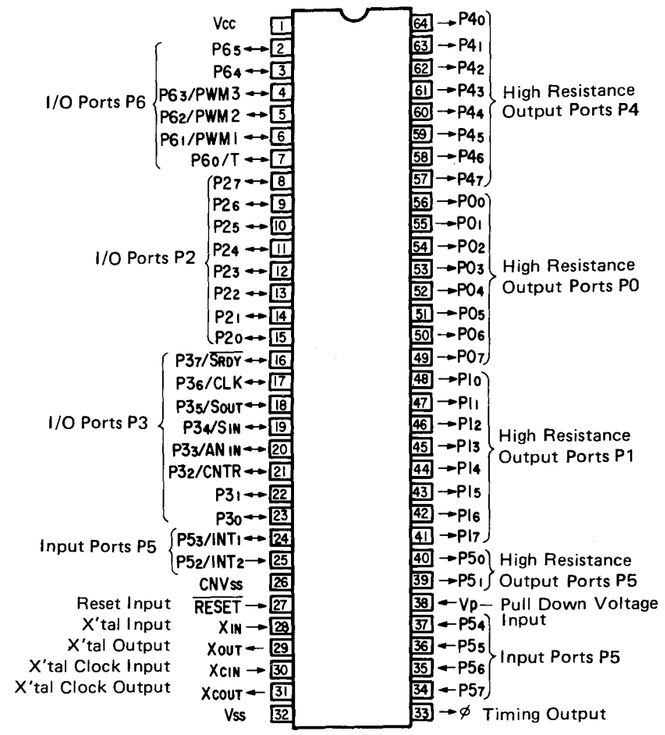

M50957

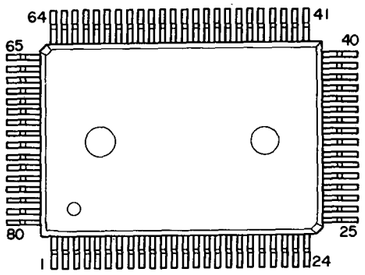

CXD1125

• IC PROTECTORS

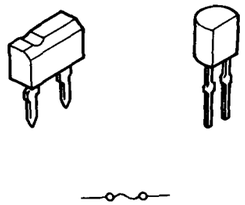

ICP-N10
ICP-N20

• TRANSISTORS

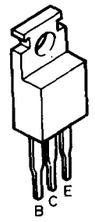

2SB941A(P/Q)
2SD1985(P/Q)

2SA933(Q)
2SC1740(R/S)
2SD1504(E/F)

2SB562(C)
2SD468(C)

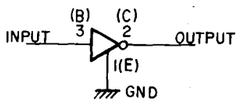

RN1202(10K-10K)NPN
RN2202(10K-10K)PNP
RN1210(4.7K-—)NPN

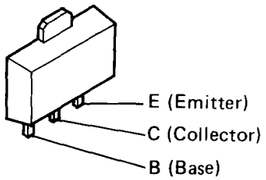

2SB766
2SD874

• DIODES

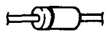

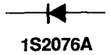

1S2076A
1SS270A
DSM1A2

HZ5C-1
HZ6C-1
HZ30-2

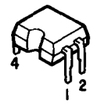

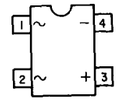

S1WB(A)10

DENON

NIPPON COLUMBIA CO., LTD.
14-14, 4-CHOME AKASAKA,
MINATO-KU, TOKYO 107 JAPAN
TEL: 03-584-8111
TLX: JAPANOLA J22591
CABLE: NIPPONCOLUMBIA TOKYO

Printed in Japan 005 BU 0203