Amiga

A600_R2

Rev.1.37 (02.09.2012)

Revision History

REV	DESCRIPTION	DATE	APRVL	MANAGER
0	Engineering Prototype	08/01/91	GRR	
1	Pilot Production	10/22/91	GRR	
2	FCC/FTZ Production Version	04/09/92	GRR	

Jumpers and Stuff

REF	TYPE	DESCRIPTION	PAGE
R246	SMT	NTSC Color Burst	4
R202	SMT	PAL Color Burst	4
R625	SMT	Keyboard MPU Clock	9
R624	SMT	Keyboard/System Reset	9

Connectors

REF	TYPE	DESCRIPTION	PAGE
CN1	DB9P	Mouse/Joystick 1	5
CN2	DB9P	Mouse/Joystick 2	5
CN3	RCA-J	Right Audio Output	5
CN4	RCA-J	Left Audio Output	5
CN5	DB23S	External Floppy	8
CN6	DB25P	RS232 Serial Port	7
CN7	DB25S	Parallel Printer Port	7
CN8	SQ DIN	Power Supply Connector	13
CN9	DB23P	Video Output	6
CN10	RCA-J	Composite Video	4
CN11	DIL-34	Internal Floppy Signal	8
CN12	SIL-4	Internal Floppy Power	8
CN13	MEM-30	Keyboard Membrane	9
CN14	SIL-4	Internal Floppy Power	8
CN13	MEM-30	Keyboard Membrane	9
CN14	SIL-4	Keyboard Status LED's	9
CN15	PCMCIA	PC"Memory Card"	11
P9	EDGE-80	Memory Bus Expansion	12

Signal Glossary

SIGNAL	DESCRIPTION (AREA)	PAGES
28MHZ	28.63636 MHz Master Clock	
7MHZ	7.15909 MHz Processor Clock	
A[23:1]	Processor Address Bus (68000)	
ACK	Data Acknowledge (Parallel Port)	
AS	Address Strobe (68000)	
AUDIN	Audio Input (RS232 Port)	
AUDOUT	Audio Output (RS232 Jack)	
BEER	Bus Error (68000)	
BG	Bus Grant (68000)	
BGACK	Bus Grant Acknowledge (68000)	
BLISS	Blitter Slowdown (Chips)	
BLIT	Chip Memory Access (Chips)	
BR	Bus Request (68000)	
BUSY	Device Busy (Parallel Port)	
CASL/U	Column Address Strobe (DRAM)	
CCK/CCKQ	Color Clock / Quadrature (Chips)	
CDAC	7.15909 MHz Quadrature Clock (Chips)	
CHNG	Media Change (Floppy)	
CLKRD/WR	Read-Time Clock Read / Write (RTC)	
COMP	Monochrome Composite Video (Video)	
CSYNC	Composite Sync (Video)	
CTS	Clear to Send (RS232 Port)	
D[15:0]	Processor Data Bus (68000)	
DIR	Step Direction (Floppy)	
DKRD	Disk Read Data (Floppy)	
DKWD	Disk Write Data (Floppy)	
DKWE	Disk Write Enable (Floppy)	
DMAL	Chip DMA Request Line (Chips)	
DRA[8:0]	DRAM Address Bus (DRAM)	
DRD[15:0]	DRAM Data Bus (DRAM)	
DSR	Data Set Ready (RS232 Port)	
DTACK	Data Transfer Acknowledge (68000)	
DTR	Data Terminal Ready (RS232 Port)	
E	Peripheral Enable Clock (68000)	
EXTICK	Expansion Present / RTC Tick	
FC[2:0]	Function Code (68000)	
FIRE0/1	Fire Button 0/1 (Joysticks)	
HLT	Processor Halt (68000)	
HSYNC	Horizontal Sync (Video)	
INDEX	Index Pulse (Floppy)	
INT[2,3,6]	Interrupt Request (Chips)	
IORESET	I/O Reset	
IPL[2:0]	Interrupt Priority Level (68000)	
KBCLOCK	Keyboard Clock (Keyboard)	
KBDATA	Keyboard Data (Keyboard)	
KBRESET	Keyboard Reset (Keyboard)	
LDS/UDS	Upper / Lower Data Strobes (68000)	
LED	Power On LED / Audio Filter Disable	
LEFT/RIGHT	Left Right Audio (Audio)	

SIGNAL	DESCRIPTION (AREA)	PAGES
LPEN	Light Pen Trigger (Joysticks)	
MTR	Motor On (Floppy)	
MTR0	Motor On - Drive 0 (Floppy)	
M0V/M0H	Mouse 0 Quadrature V/H (Joysticks)	
M1V/M1H	Mouse 1 Quadrature V/H (Joysticks)	
OVL	Overlay ROM over RAM	
OVR	Override System Decoding	
PIXELSW	Genlock Pixel Switch (Video)	
POT0X/0Y	Pot Lines 0 X/Y (Joysticks)	
POT1X/1Y	Pot Lines 1 X/Y (Joysticks)	
POUT	Paper Out (Parallel Port)	
PPD[7:0]	Parallel Port Data (Parallel Port)	
RAMEN	RAM Enable (Chips)	
REGEN	Chip Register Enable (Chips)	
RAS0/1	Row Address Strobe (DRAM)	
RDY	Drive Ready (Floppy)	
RESET	General Reset	
RGA[8:1]	Register Address Bus (Chips)	
R/G/B	Red / Green / Blue (Video)	
RI	Ring Indicate (RS232 Port)	
ROMEN	ROM Enable (ROM)	
RTS	Request to Send (RS232 Port)	
RST	Processor Reset (68000)	
RXD	Receive Data (RS232 Port)	
RW	Processor Read/Write (68000)	
SEL	Select (Parallel Port)	
SEL[3:0]	Drive Select (Floppy)	
SIDE	Side Select (Floppy)	
STEP	Step In/Out Command (Floppy)	
TRK0	Track Zero Sense (Floppy)	
TXD	Transmit Data (RS232 Port)	
VMA	Valid Memory Address (68000)	
VPA	Valid Peripheral Address (68000)	
VSYNC	Vertical Sync (Video)	
WE	Write Enable (DRAM)	
WPROT	Write Protect Sense (Floppy)	
XCLK	External Genlock Clock (Video)	
XCLKEN	External Clock Enable (Video)	
XRDY	External Data Ready	
	** Credit Card and IDE Stuff? **	

Key Components

REF	CHIP	DESCRIPTION	PAGE
U1	68000	68000 Processor, 8MHz	2
U2	8375	ECS Agnus A300/A500+	2
U3	8364	Paula	5
U4	8373	ECS Denise	4
U5	4145-20	Gayle Gate Array	2,8,11
U6	asst	ROM 256Kx16, 200 nS	10
U7-8	8520	Amiga VIA, 1 MHz	7
U10-11	28F10	Flash Memory 128Kx8	10
U12	CXA1145	Sony Video Encoder	4
U13	6570-36	Amgia Keyboard MPU	9
U14	NE555	Reset Timer	9
U16-17	asst	DRAM 256Kx16, 120 nS	3
U15	LF347	BiMOS Op-Amp	5
	TL084	BiMOS Op-Amp	alt
U28	1488	EIA Line Driver	7
U29	1489	EIA Line Receiver	7
X1	OSC	TTL 28.63636 MHz NTSC	2
	OSC	TTL 28.37512 MHz PAL	alt
Y451	XTAL	4.43619MHz PAL Burst	4
Y621	XTAL	3MHz Ceramic Resonator	9
X2	asst	PAL Video Modulator	4
	asst	NTSC Video Modulator	4

DIRECTORIES AND REVISION HISTORY

© 1992 Commodore Business Machines
Information contained herein is the unpublished, confidential and trade secret property of Commodore Business Machines, Inc. Any use, reproduction or disclosure of this information without the prior written permission of Commodore is strictly prohibited.

C.A.D. Generated
No manual changes may be made to this document

DESIGN BY: G. Robbins — DATE: 05/27/91
DRAW: GRR — 05/27/91
LAST: GRR — 04/09/92
CHKD:
APPR:
USED ON: C/A600 — NEXT ASSY: 364809

Commodore
Schematic A600 Rev 2
C/A600 Main Board
"June Bug"

SIZE C | 364811 | REV 2
SCALE | SHEET 1 OF 13

PATH: /project/a300/june_bug_rev2 sheet1

A600 Rev 2D PCB

© rebuild for www.amigawiki.org · for private use only

Rev.1.37 (02.09.2012)

Note: Various components are for EMI Control

and may be loaded with funny things...

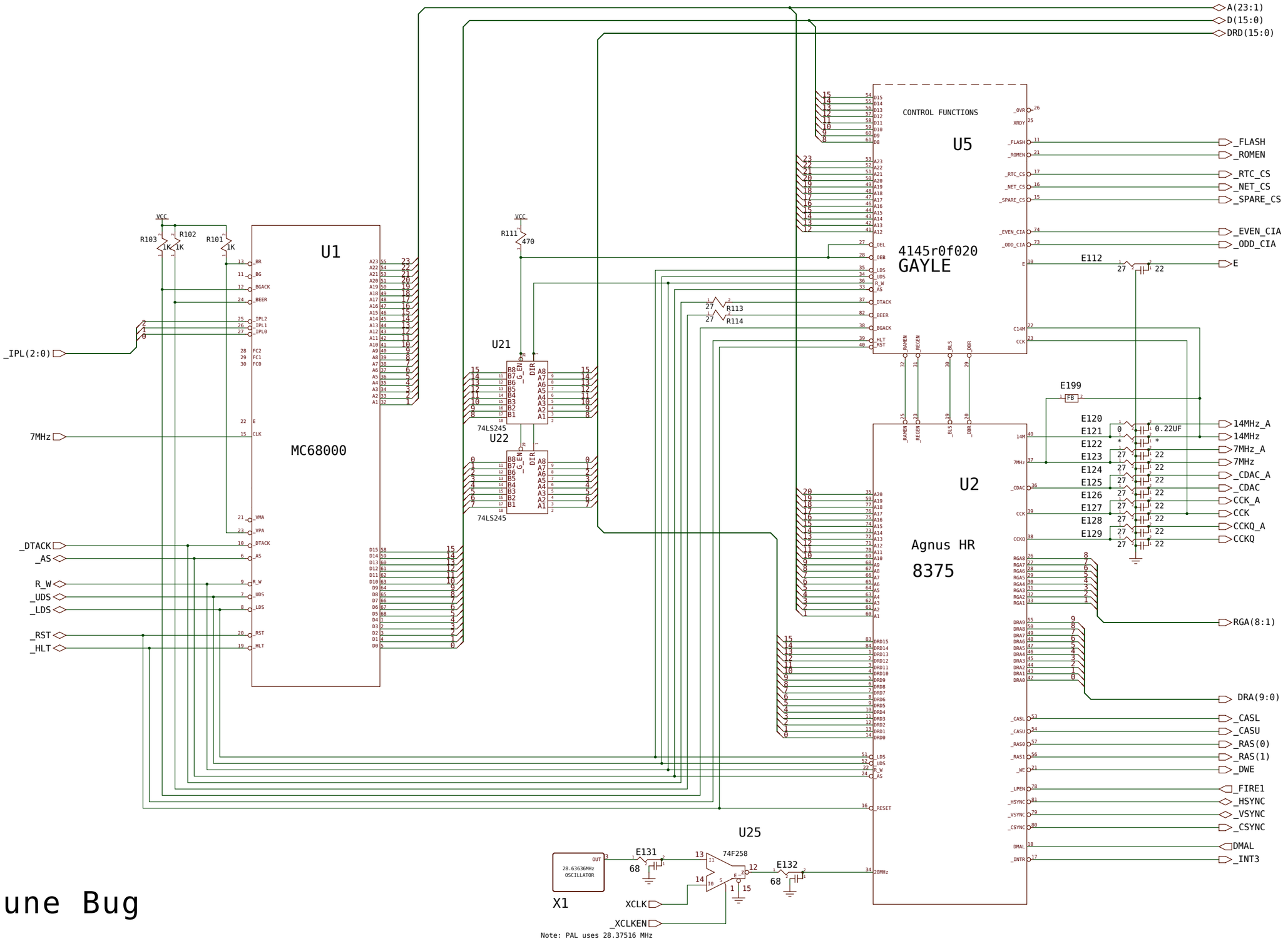

June Bug

04/09/92

A600 Rev 2D PCB

PROCESSOR AND OTHER USEFUL COMPONENTS

© 1992 Commodore Business Machines
Information contained herein is the unpublished, confidential and trade secret property of Commodore Business Machines, Inc. Any use, reproduction or disclosure of this information without the prior written permission of Commodore is strictly prohibited.

C.A.D. Generated

No manual changes may be made to this document

DESIGN BY: G. Robbins	DATE 05/27/91	Commodore	
DRAW: GRR	05/27/91		
LAST: GRR	04/09/92	Schematic A600 Rev 2	
CHKD:		C/A600 Main Board "June Bug"	
APPR:			
USED ON	NEXT ASSY	SIZE C	364811 REV 2
C/A600	364809	SCALE	SHEET 2 OF 13

PATH: /project/a300/june_bug_rev2 sheet2

© rebuild for www.amigawiki.org · for private use only

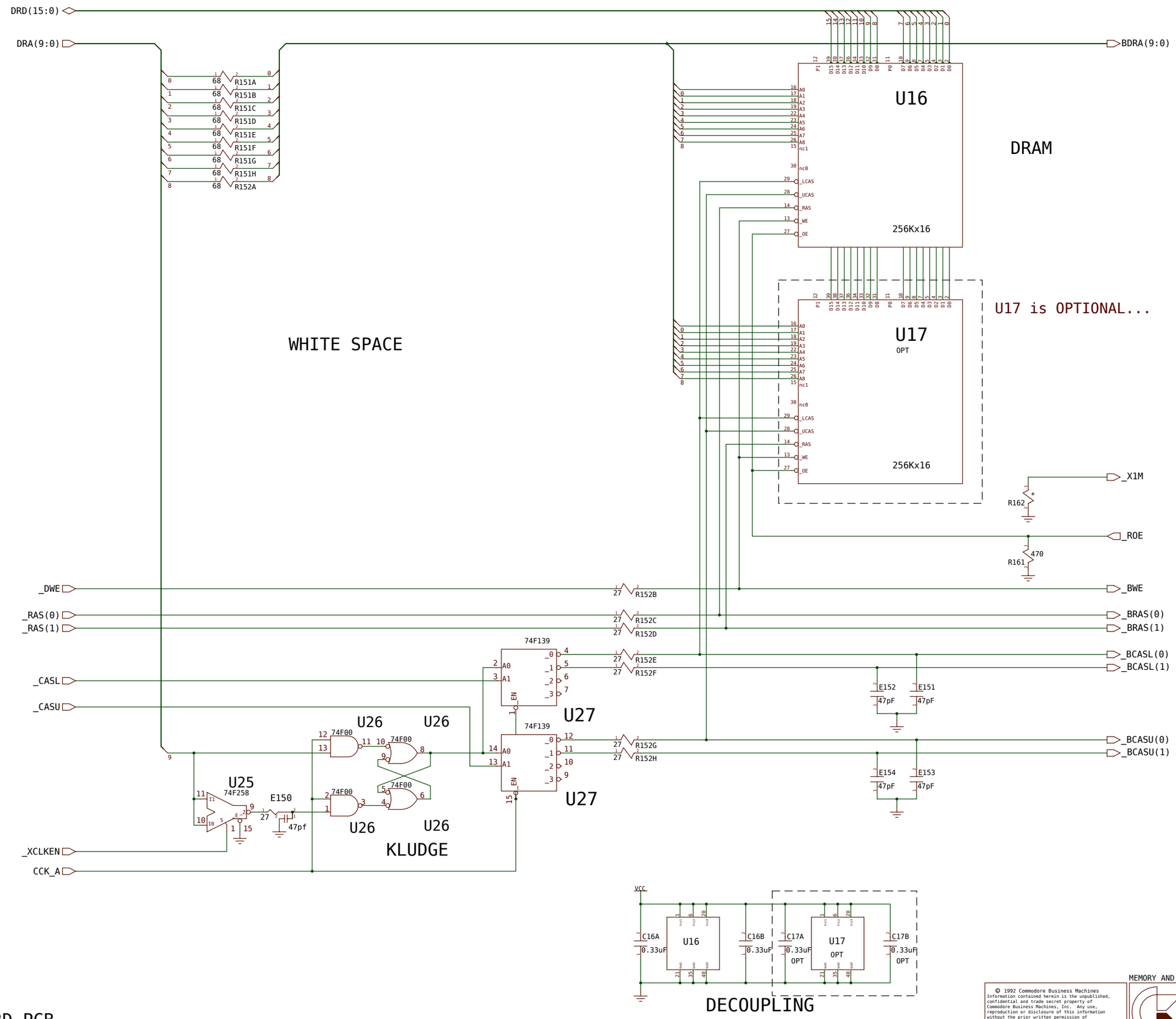

A600 Rev 2D PCB

MEMORY AND...WELL, I USED TO REMEMBER

© 1992 Commodore Business Machines
Information contained herein is the unpublished, confidential and trade secret property of Commodore Business Machines, Inc. Any use, reproduction or disclosure of this information without the prior written permission of Commodore is strictly prohibited.

C.A.D. Generated
No manual changes may be made to this document

DESIGN BY: G. Robbins	DATE: 05/27/91	Commodore
DRAW: GRR	05/27/91	Schematic A600 Rev 2 C/A600 Main Board "June Bug"
LAST: GRR	04/09/92	
CHKD:		
APPR:		
USED ON: C/A600	NEXT ASSY: 364809	SIZE: C 364811 REV: 2
		SCALE / SHEET 3 OF 13

PATH: /project/a300/june_bug_rev2 sheet3

© rebuild for www.amigawiki.org · for private use only

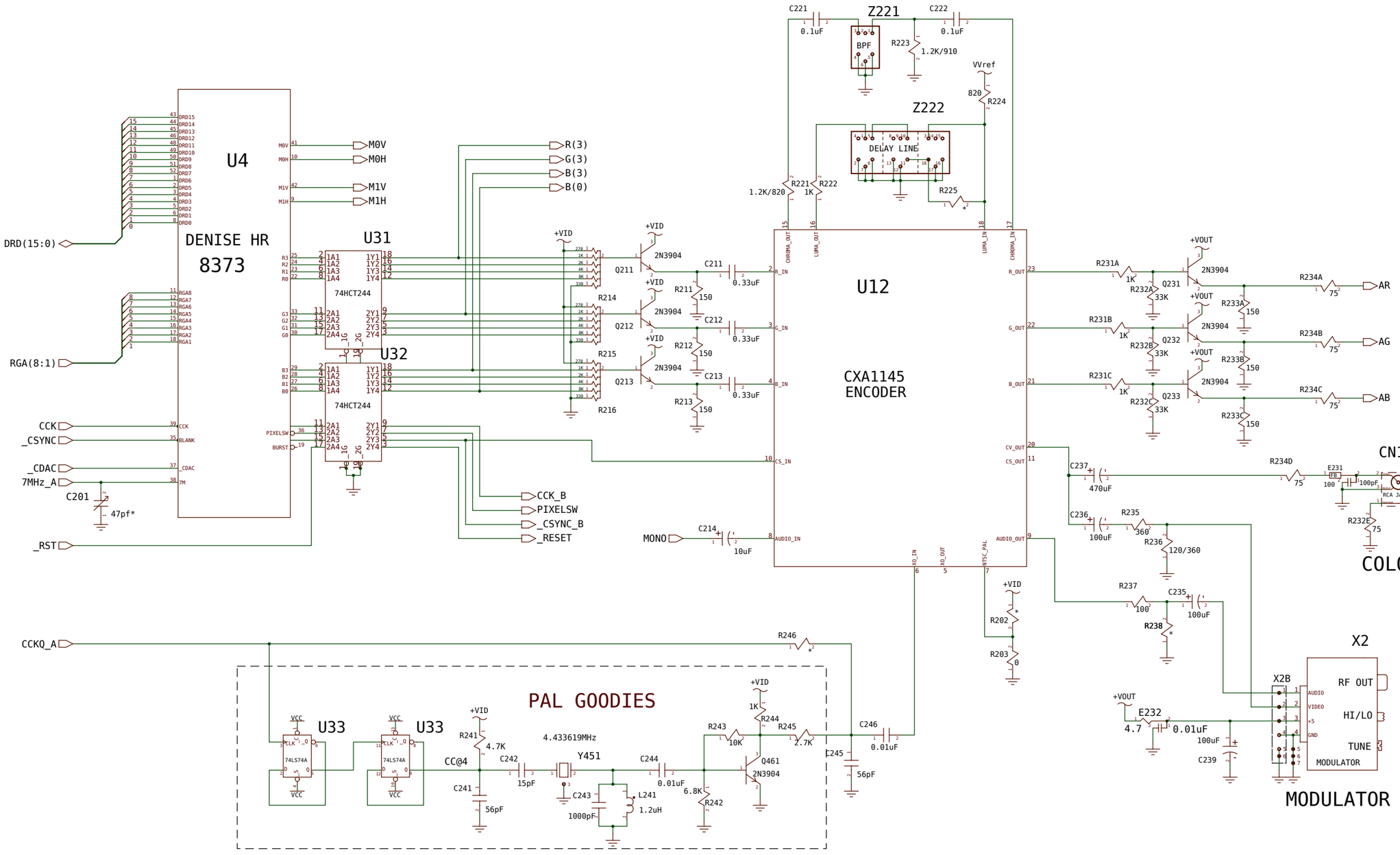

A600 Rev 2D PCB

Note: Components designated as Exxx may be loaded with EMI fliters, ferrite beads or resistors!

DENISE IS PRETTY MUCH INTO VIDEO...

© 1992 Commodore Business Machines
Information contained herein is the unpublished, confidential and trade secret property of Commodore Business Machines, Inc. Any use, reproduction or disclosure of this information without the prior written permission of Commodore is strictly prohibited.

C.A.D. Generated
No manual changes may be made to this document

DESIGN BY: K. Robbins	DATE 04/29/93	Commodore
DRAW: GRR	05/27/93	Schematic A600 Rev 2 C/A600 Main Board "June Bug"
LAST: GRR	04/09/93	
CHKD:		
APPR:		
USED ON: C/A600	NEXT ASSY: 364809	SIZE C / 364811 / REV 2
		SCALE / SHEET 4 OF 13

PATH: /project/a300/june_bug_rev2 sheet4

Rev:1.37 (02-09-2012)

© rebuild for www.amigawiki.org · for private use only

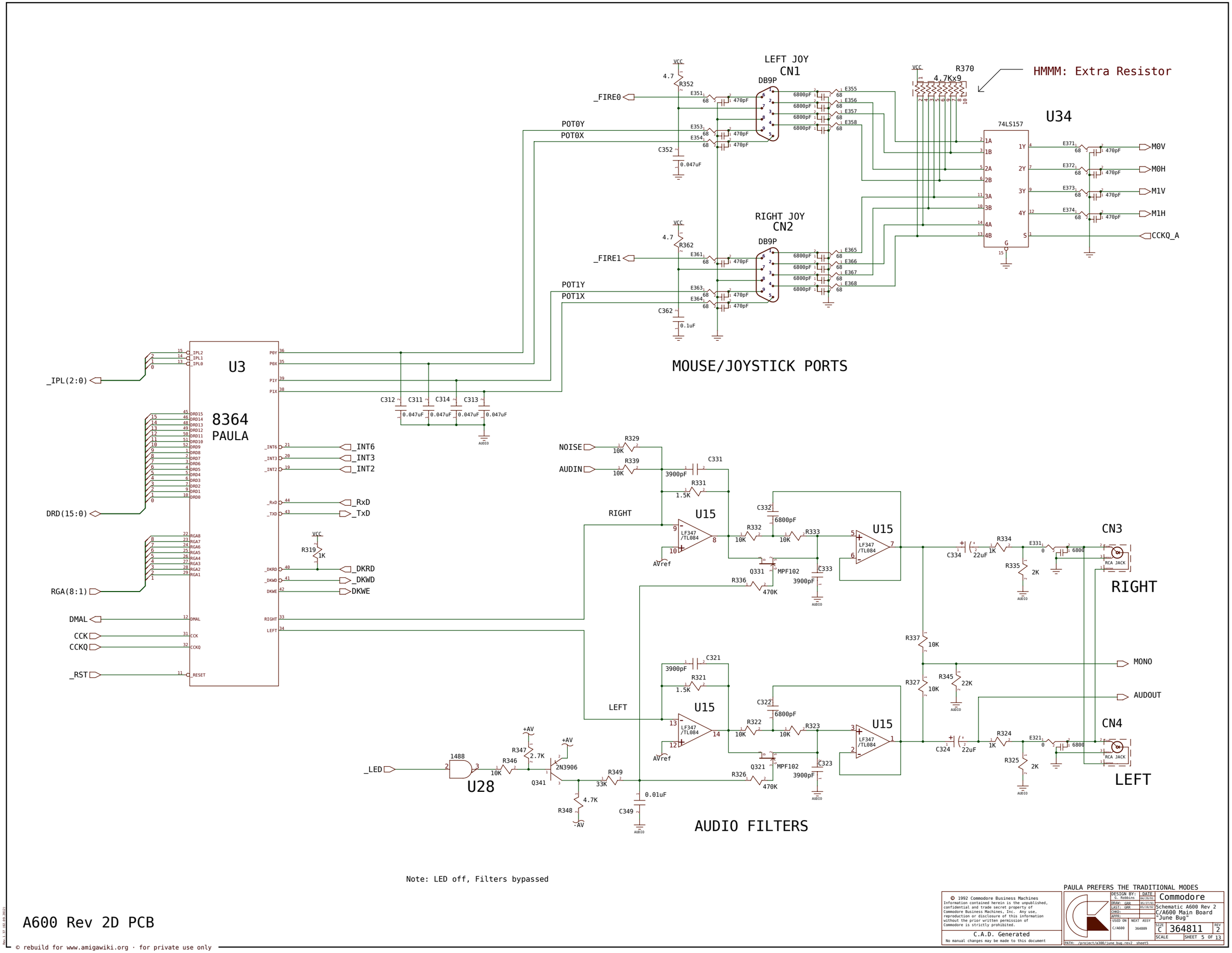

Note: LED off, Filters bypassed

A600 Rev 2D PCB

PAULA PREFERS THE TRADITIONAL MODES

© 1992 Commodore Business Machines
Information contained herein is the unpublished, confidential and trade secret property of Commodore Business Machines, Inc. Any use, reproduction or disclosure of this information without the prior written permission of Commodore is strictly prohibited.

C.A.D. Generated
No manual changes may be made to this document

DESIGN BY: G. Robbins	DATE: 04/29/91
DRAW: GRR	05/27/91
LAST: GRR	05/19/92
CHKD:	
APPR:	
USED ON: C/A600	NEXT ASSY: 364809

Commodore
Schematic A600 Rev 2
C/A600 Main Board
"June Bug"

SIZE C | 364811 | REV 2
SCALE | SHEET 5 OF 13

PATH: /project/a300/june_bug_rev2 sheet5

© rebuild for www.amigawiki.org · for private use only

GENERAL DECOUPLING

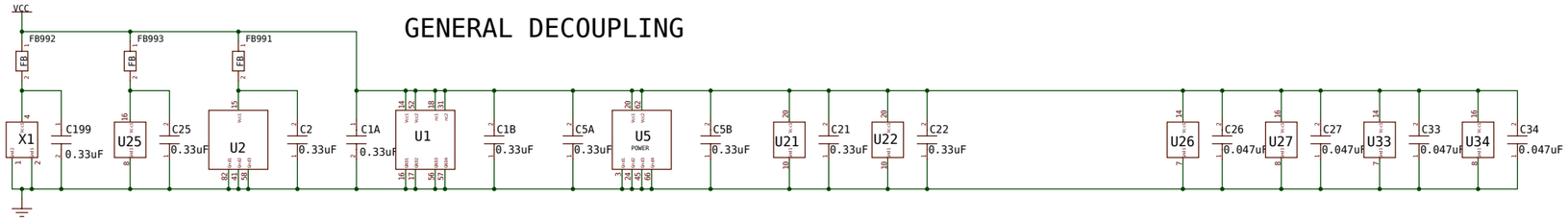

VIDEO OUT

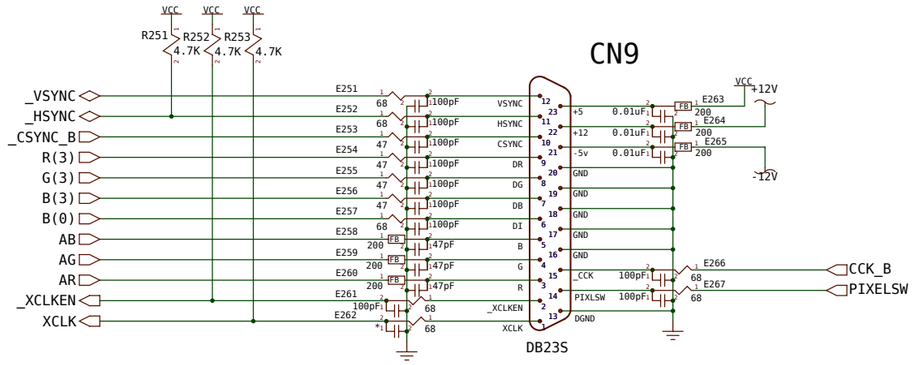

AUDIO POWER

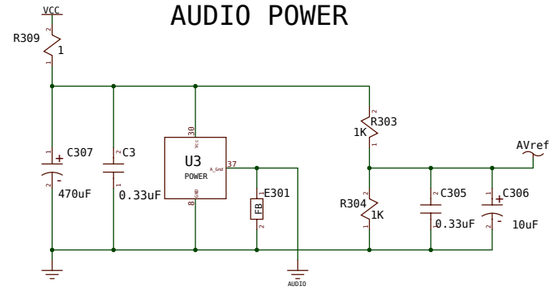

Note: Ground interconnection near audio jacks.

VIDEO POWER

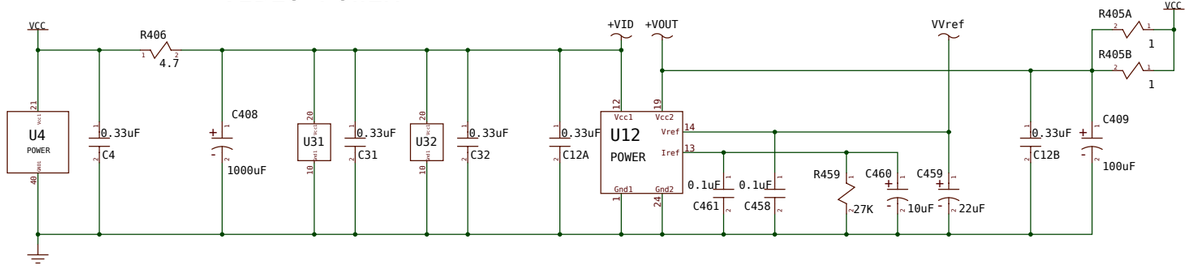

DECOUPLING

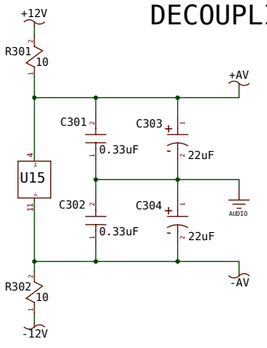

PARTY OUT OF BOUNDS, WHAT A MESS...

© 1992 Commodore Business Machines
Information contained herein is the unpublished, confidential and trade secret property of Commodore Business Machines, Inc. Any use, reproduction or disclosure of this information without the prior written permission of Commodore is strictly prohibited.

C.A.D. Generated
No manual changes may be made to this document

DESIGN BY: G. Robbins	DATE: 04/29/93	Commodore
DRAW: GRR	05/27/97	Schematic A600 Rev 2
LAST: GRR	04/09/97	C/A600 Main Board
CHKD:		"June Bug"
APPR:		
USED ON: C/A600	NEXT ASSY: 364809	SIZE C / 364811 / REV 2
		SCALE / SHEET 6 OF 13

PATH: /project/a300/june_bug.rev2 sheet6

A600 Rev 2D PCB

© rebuild for www.amigawiki.org · for private use only

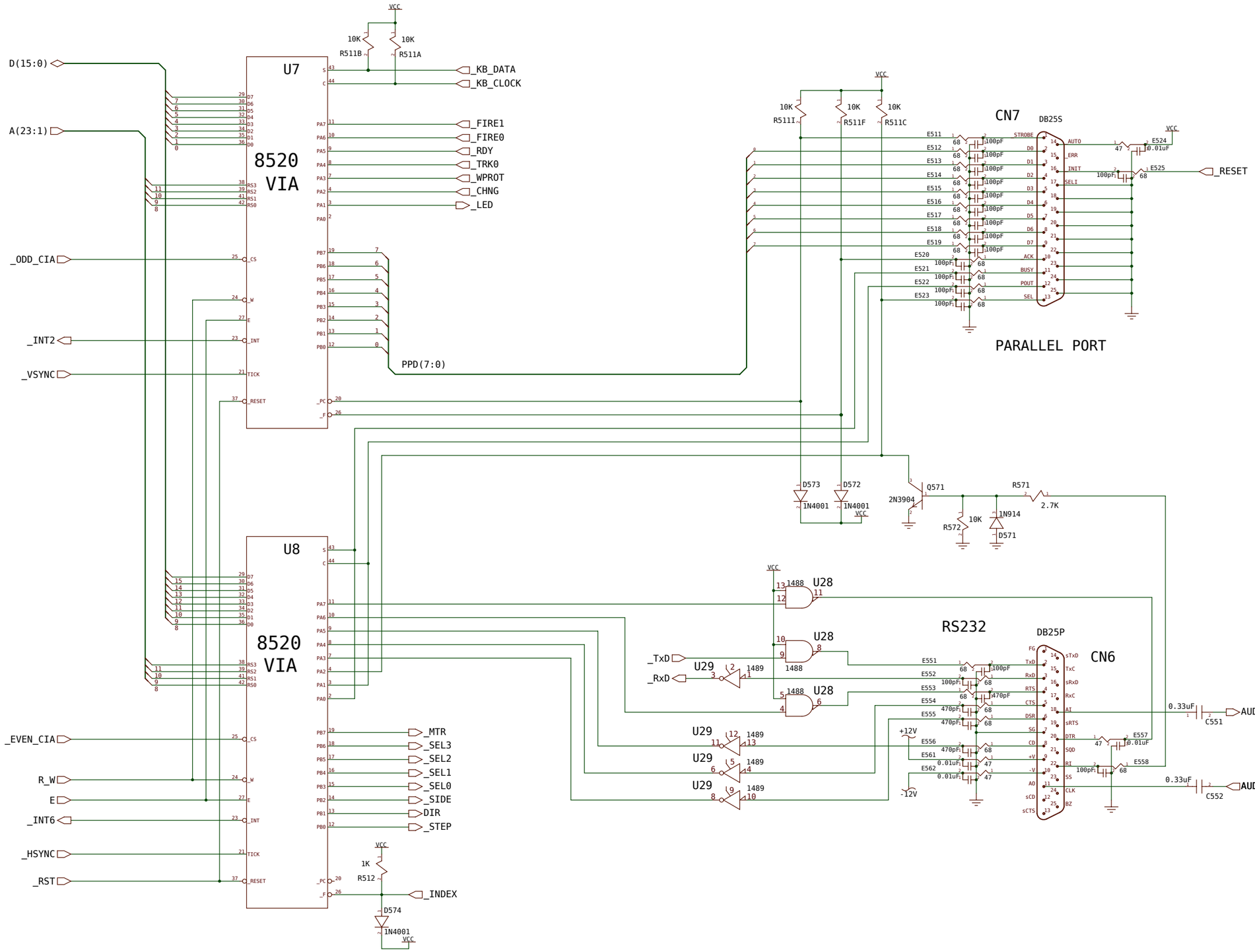

A600 Rev 2D PCB

© rebuild for www.amigawiki.org · for private use only

SERIAL AND PARALLEL PORTS

© 1992 Commodore Business Machines
Information contained herein is the unpublished, confidential and trade secret property of Commodore Business Machines, Inc. Any use, reproduction or disclosure of this information without the prior written permission of Commodore is strictly prohibited.

C.A.D. Generated
No manual changes may be made to this document

DESIGN BY: G. Robbins 08/27/91
DRAW: GRR 09/27/91
LAST: GRR 04/09/92
CHKD:
APPR:
USED ON: C/A600
NEXT ASSY: 364809

Commodore
Schematic A600 Rev 2
C/A600 Main Board
"June Bug"

SIZE C | 364811 | REV 2
SCALE | SHEET 7 OF 13

PATH: /project/a300/june_bug_rev2 sheet7

FLOPPY LOGIC

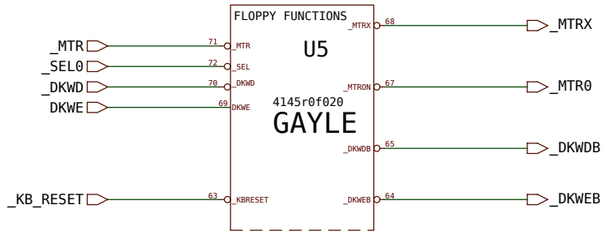

FLOPPY POWER

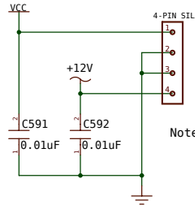

CN12

Note: Some drives are +5 only...

EXTERNAL FLOPPY

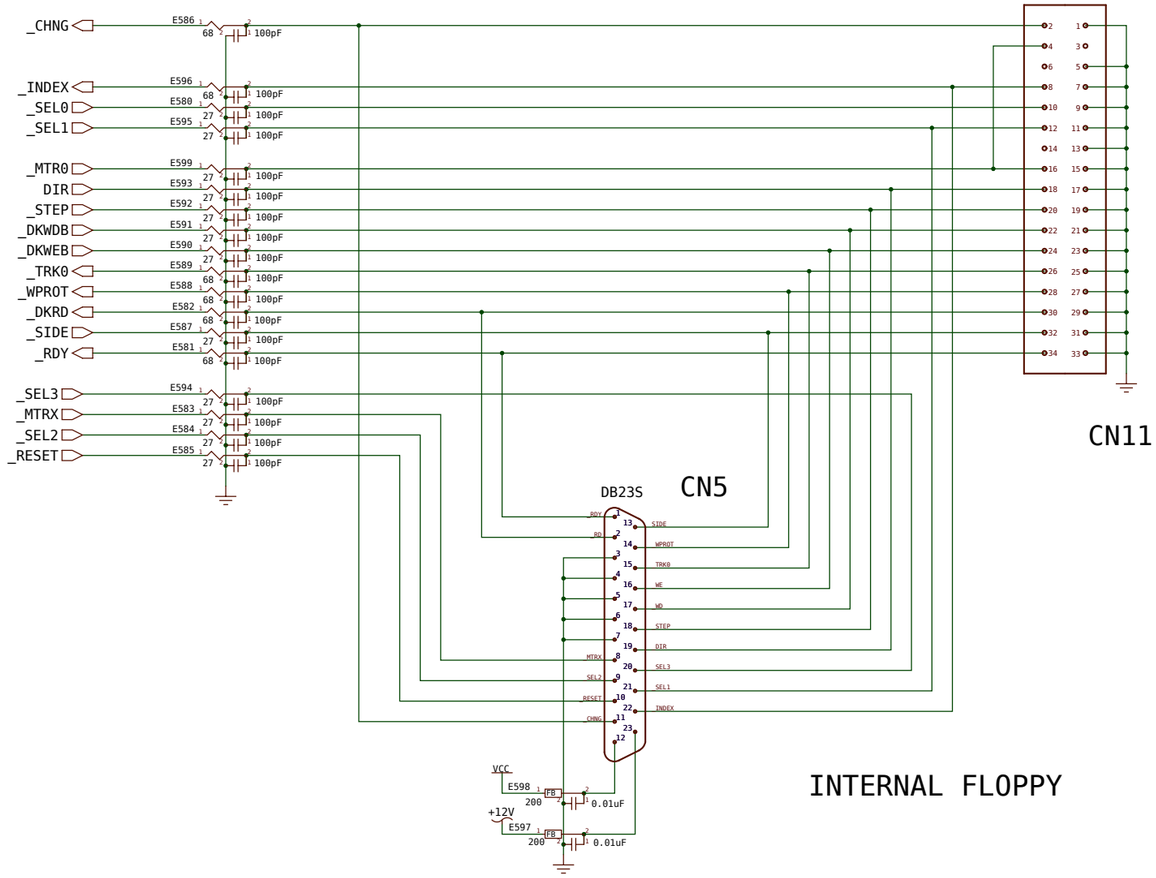

INTERNAL FLOPPY

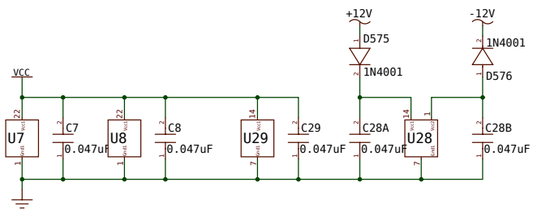

THE REST OF THE FLOPPY STUFF

© 1992 Commodore Business Machines
Information contained herein is the unpublished, confidential and trade secret property of Commodore Business Machines, Inc. Any use, reproduction or disclosure of this information without the prior written permission of Commodore is strictly prohibited.

C.A.D. Generated

No manual changes may be made to this document

DESIGN BY: G. Robbins	DATE 05/27/91	Commodore
DRAW: GRR	05/27/92	Schematic A600 Rev 2
LAST: GRR	04/09/92	C/A600 Main Board
CHKD:		"June Bug"
APPR:		
USED ON: C/A600	NEXT ASSY: 364809	SIZE C · 364811 · REV 2
		SCALE · SHEET 8 OF 13

PATH: /project/a300/june_bug_rev2 sheet8

A600 Rev 2D PCB

© rebuild for www.amigawiki.org · for private use only

KEYBOARD TAIL

CN13

_KB_DATA
_KB_CLOCK

U13
6570

PICK A CLOCK
22pF* Y621 C621 3MHz* 22pF* C622
_CCK R625
E R626
_RST

R622 100
Q621
1K R621 2N3904

POWER UP RESET

R611 1M C611 0.1uF
R612 47K C612 10uF
U14 NE555
0.01uF C613
R514 4.7K
R511D 1K
470 R515
Q511 2N3904
_KB_RESET

POWER OK

U49
RH5VA43A
U49 added Rev 2C

R624
74F27 U36
R623 10K Q622 2N3904
DUE TO DIE

KB LEDS

_IDE_LED R631 10K R632 4.7K Q631 2N3906
_CC_ENA R637 * R638 * Q634 2N3906
_MTR0 R633 10K R634 4.7K Q632 2N3906
_LED R635 10K R636 4.7K Q633 2N3906 R639 100

4-PIN SIL
CN14

DECOUPLING

U13 POWER
C13 0.33uF
U14 C14 0.33uF
U36 C36 0.047uF

A600 Rev 2D PCB

THE NEW HOME OF THE KEYBOARD VIRUS

© 1992 Commodore Business Machines
Information contained herein is the unpublished, confidential and trade secret property of Commodore Business Machines, Inc. Any use, reproduction or disclosure of this information without the prior written permission of Commodore is strictly prohibited.

C.A.D. Generated
No manual changes may be made to this document

DESIGN BY: G. Robbins	DATE 05/27/91	Commodore
DRAW: GRR	05/27/91	Schematic A600 Rev 2
LAST: GRR	04/09/92	C/A600 Main Board
CHKD:		"June Bug"
APPR:		
USED ON: C/A600	NEXT ASSY: 364809	SIZE C / 364811 / REV 2
		SCALE / SHEET 9 OF 13

PATH: /project/a300/june_bug.rev2 sheet9

© rebuild for www.amigawiki.org · for private use only

ROM

FLASH MEMORY

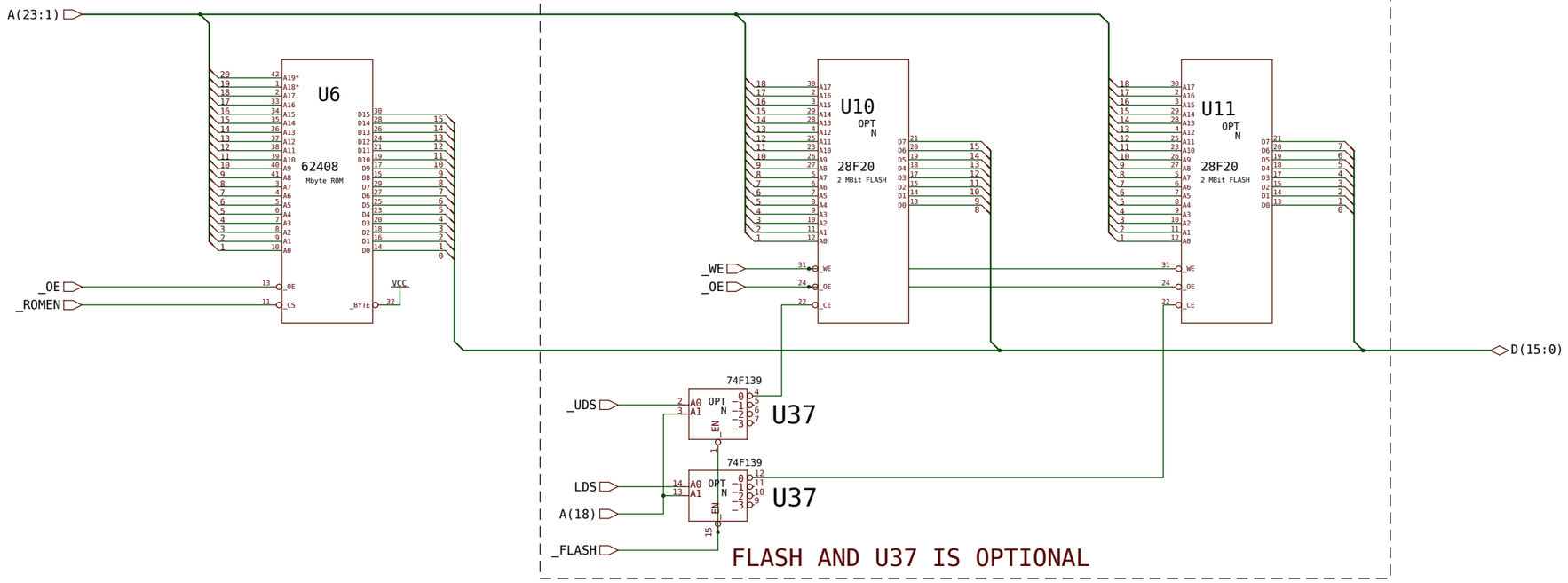

PROGRAMMING VOLTAGE

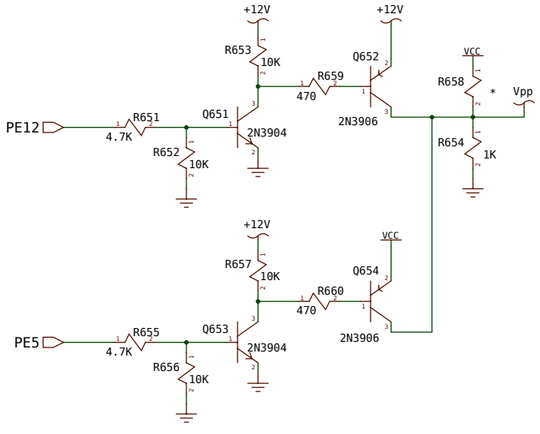

FUNNY INVERTERS

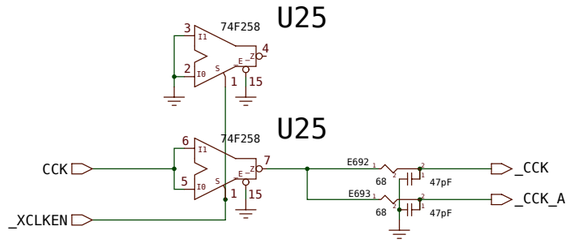

DECOUPLING

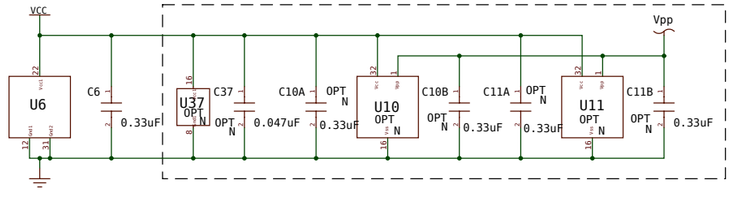

A600 Rev 2D PCB

ROM - PLAIN AND FANCY - DODADS TOO!

© 1992 Commodore Business Machines
Information contained herein is the unpublished, confidential and trade secret property of Commodore Business Machines, Inc. Any use, reproduction or disclosure of this information without the prior written permission of Commodore is strictly prohibited.
C.A.D. Generated
No manual changes may be made to this document

DESIGN BY: G. Robbins	DATE 05/27/91	Commodore
DRAW: GRR	05/27/91	Schematic A600 Rev 2
LAST: GRR	04/09/92	C/A600 Main Board
CHKD:		"June Bug"
APPR:		
USED ON: C/A600	NEXT ASSY 364809	SIZE C 364811 REV 2
		SCALE SHEET 10 OF 13

PATH: /project/a300/june_bug_rev2 sheet10

© rebuild for www.amigawiki.org · for private use only

MEMORY CARD

CN15

A(23:1)

A(16)

_REG

D(15:0)

R_W

U44 74F02

U44 74F02

R714A 120

R714B 120

U45 74LS245

U46 74LS245

U47 74LS245

U41 74LS245

U42 74LS245

Warning:
Byte Swapped

CC_A(25:0)

CC_D(15:0)

_CC_CD(1)
_CC_CEU
_CC_CEL
_CC_OE
_CC_IORD
_CC_IOWR
_CC_WE_PGM
_CC_BUSY_IREQ
_CC_RESET
_CC_WAIT
_CC_REG
_CC_BVD(2)
_CC_BVD(1)
_CC_WP
_CC_CD(2)

R717 10K
R718 10K
C701 0.33uF
C702 0.33uF

Vpp

R716 10K

74LS245 U43

_OE
_WE
_IORD
_IOWR
_UDS
_LDS
_REG
_CC_WAIT
_CC_ENA

_CC_OE
_CC_WE_PGM
_CC_IORD
_CC_IOWR
_CC_CEU
_CC_CEL
_CC_REG
_WAIT

R715 10K ← EEEK: EXTRA R

CARD FUNCTIONS

U5 4145r0f020 GAYLE

_CC_CD(1)
_CC_CD(2)
_CC_BVD(1)
_CC_BVD(2)
_CC_WP
_CC_BUSY_IREQ
_REG
_WAIT
_IORD
_IOWR
_OE
_WE
_CC_ENA
CC_RESET

PE5
PE12
NOISE
C711 0.33uF

_IDE_IRQ
_IDE_CS(1)
_IDE_CS(2)
_INT2
_INT6

R715Y 4.7K
R715X 4.7K

U44 74F02
U44 74F02
SPARE

C41 C42 C43 C44 C45 C46 C47 0.33uF

DECOUPLING

A600 Rev 2D PCB

THE KISSY FACE CREDIT CARD MONSTER

© 1992 Commodore Business Machines
Information contained herein is the unpublished, confidential and trade secret property of Commodore Business Machines, Inc. Any use, reproduction or disclosure of this information without the prior written permission of Commodore is strictly prohibited.

C.A.D. Generated
No manual changes may be made to this document

DESIGN BY: G. Robbins	DATE 05/27/92	Commodore
DRAW: GRR	05/27/92	Schematic A600 Rev 2 C/A600 Main Board "June Bug"
LAST: GRR	04/09/92	
CHKD:		
APPR:		
USED ON C/A600	NEXT ASSY 364809	SIZE C 364811 REV 2
		SCALE SHEET 11 OF 13

PATH: /project/a300/june_bug.rev2 sheet11

© rebuild for www.amigawiki.org · for private use only

MEMORY EXPANSION

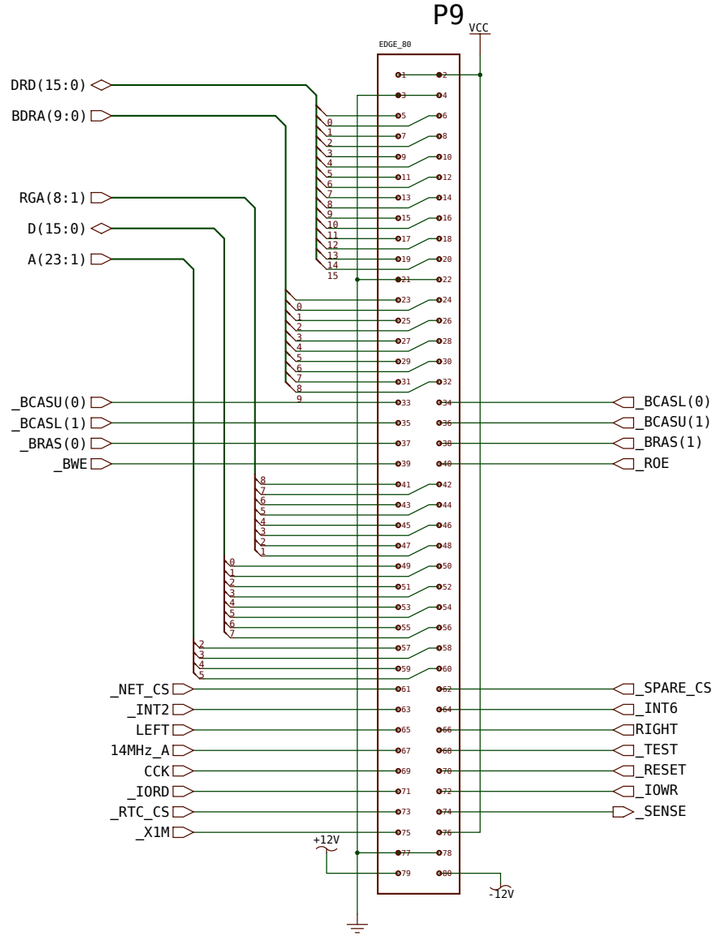

IDE DRIVE

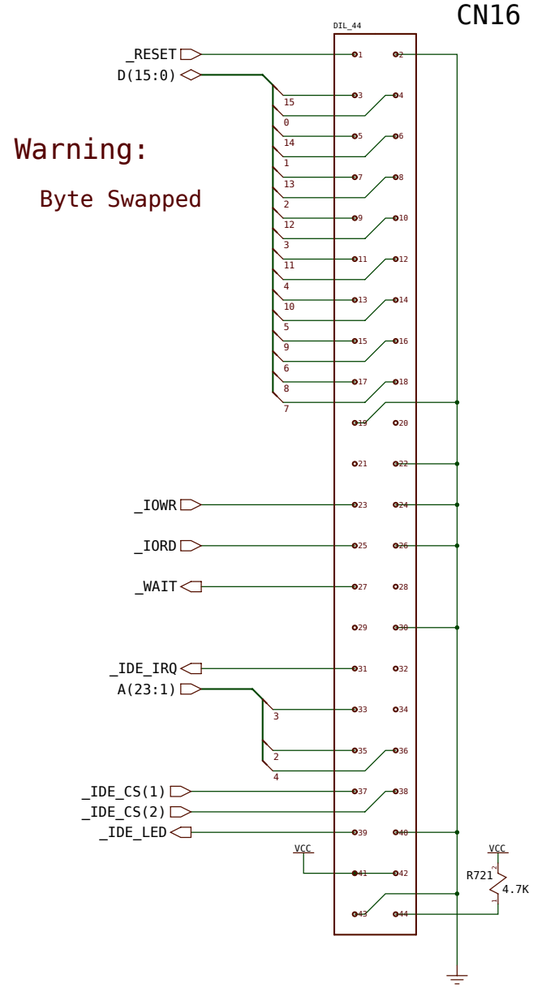

Note: 14MHz or Vbb!

A600 Rev 2D PCB

© rebuild for www.amigawiki.org · for private use only

MEMORY EXPANSION AND THE IDE DRIVE

© 1992 Commodore Business Machines
Information contained herein is the unpublished, confidential and trade secret property of Commodore Business Machines, Inc. Any use, reproduction or disclosure of this information without the prior written permission of Commodore is strictly prohibited.

C.A.D. Generated
No manual changes may be made to this document

DESIGN BY: G. Robbins	DATE 05/27/91	Commodore
DRAW: GRR	05/27/91	
LAST: GRR	04/09/92	Schematic A600 Rev 2
CHKD:		C/A600 Main Board
APPR:		"June Bug"
USED ON: C/A600	NEXT ASSY: 364809	SIZE C · 364811 · REV 2
		SCALE · SHEET 12 OF 13

PATH: /project/a300/june_bug_rev2 sheet12

Rev.1.37 (02.09.2012)

POWER INPUT

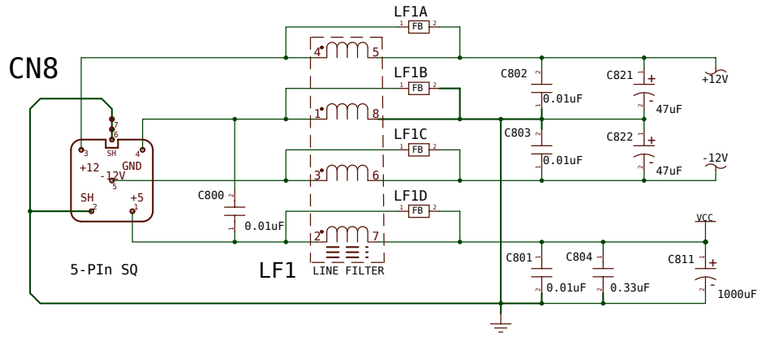

NOTE: HEAVY LINES INDICATE A
SINGLE POINT CONNECTION
LF1/LF1A... DUAL FOOTPRINT

"BUS" TERMINATION

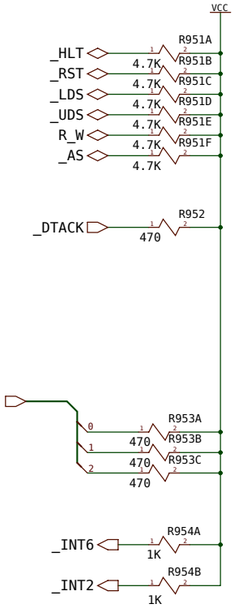

GROUNDED HOLES, &c.

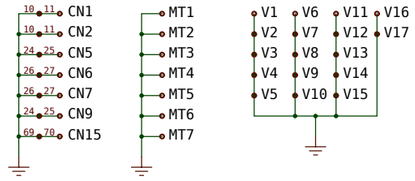

A600 Rev 2D PCB

POWER DISTRIBUTION AND DECOUPLING

© 1992 Commodore Business Machines
Information contained herein is the unpublished, confidential and trade secret property of Commodore Business Machines, Inc. Any use, reproduction or disclosure of this information without the prior written permission of Commodore is strictly prohibited.
C.A.D. Generated
No manual changes may be made to this document

DESIGN BY: G. Robbins	DATE 05/27/91	Commodore
DRAW: GRR	05/27/91	Schematic A600 Rev 2
LAST: GRR	04/09/92	C/A600 Main Board
CHKD:		"June Bug"
APPR:		
USED ON: C/A600	NEXT ASSY: 364809	SIZE C 364811 REV 2
		SCALE SHEET 13 OF 13

PATH: /project/a300/june_bug_rev2 sheet13

Rev.1.37 (02.20.2012)

© rebuild for www.amigawiki.org · for private use only

	REVISIONS			
REV	DESCRIPTION	DATE	APRVL	MANAGER
A	PILOT PRODUCTION RELEASE			

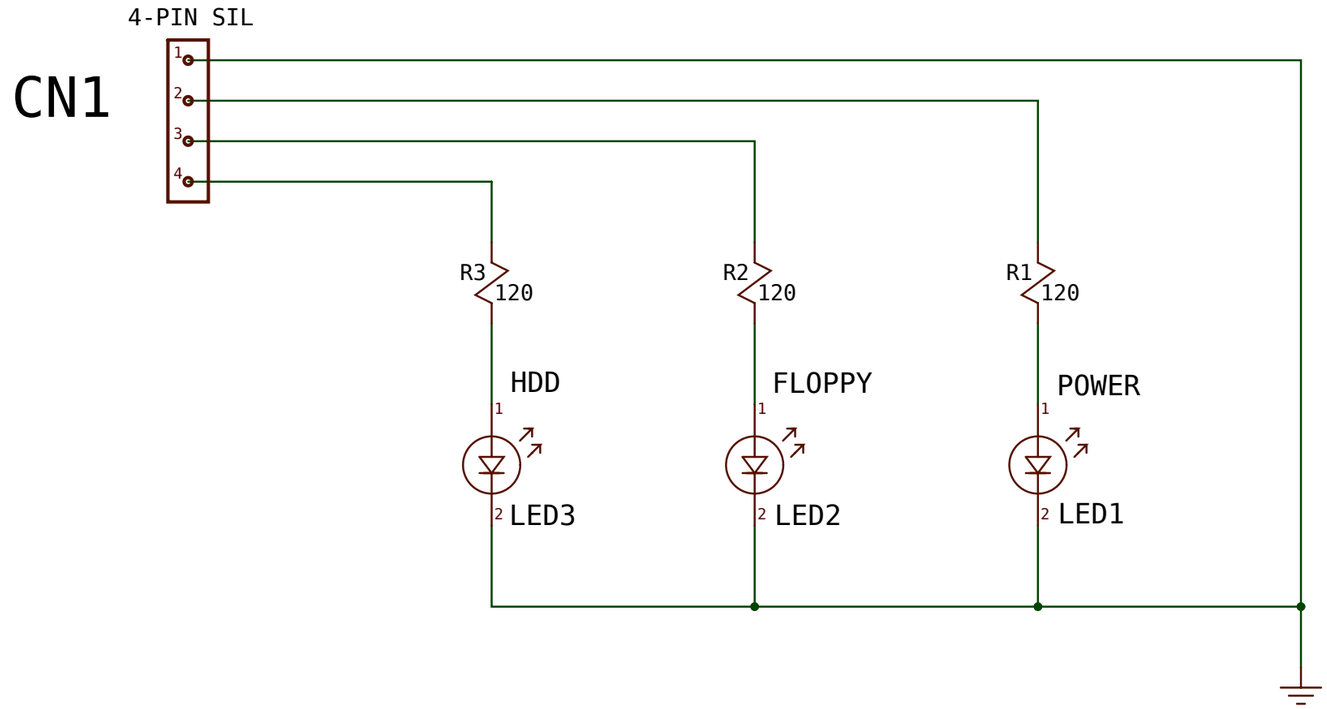

SHINE ON, SHINE ON

A300 PCB ASSEMBLY REV1

© 1991 Commodore Business Machines
Information contained herein is the unpublished, confidential and trade secret property of Commodore Business Machines, Inc. Any use, reproduction or disclosure of this information without the prior written permission of Commodore is strictly prohibited.

C.A.D. Generated
No manual changes may be made to this document

DESIGN BY:	DATE
B. FENIMORE	11/19/91
DRAW: BAF	11/19/91
LAST: BAF	11/19/91
CHKD:	
APPR:	

USED ON	NEXT ASSY
A300	315992

Commodore
SCHEMATIC
A300 LED ASSY

SIZE		REV
A	364075	A

SCALE | SHEET 1 OF 1

PATH: /user/fenimore/A300/led_assy sheet1

Rev.1.37 (02.09.2012)

© rebuild for www.amigawiki.org · for private use only

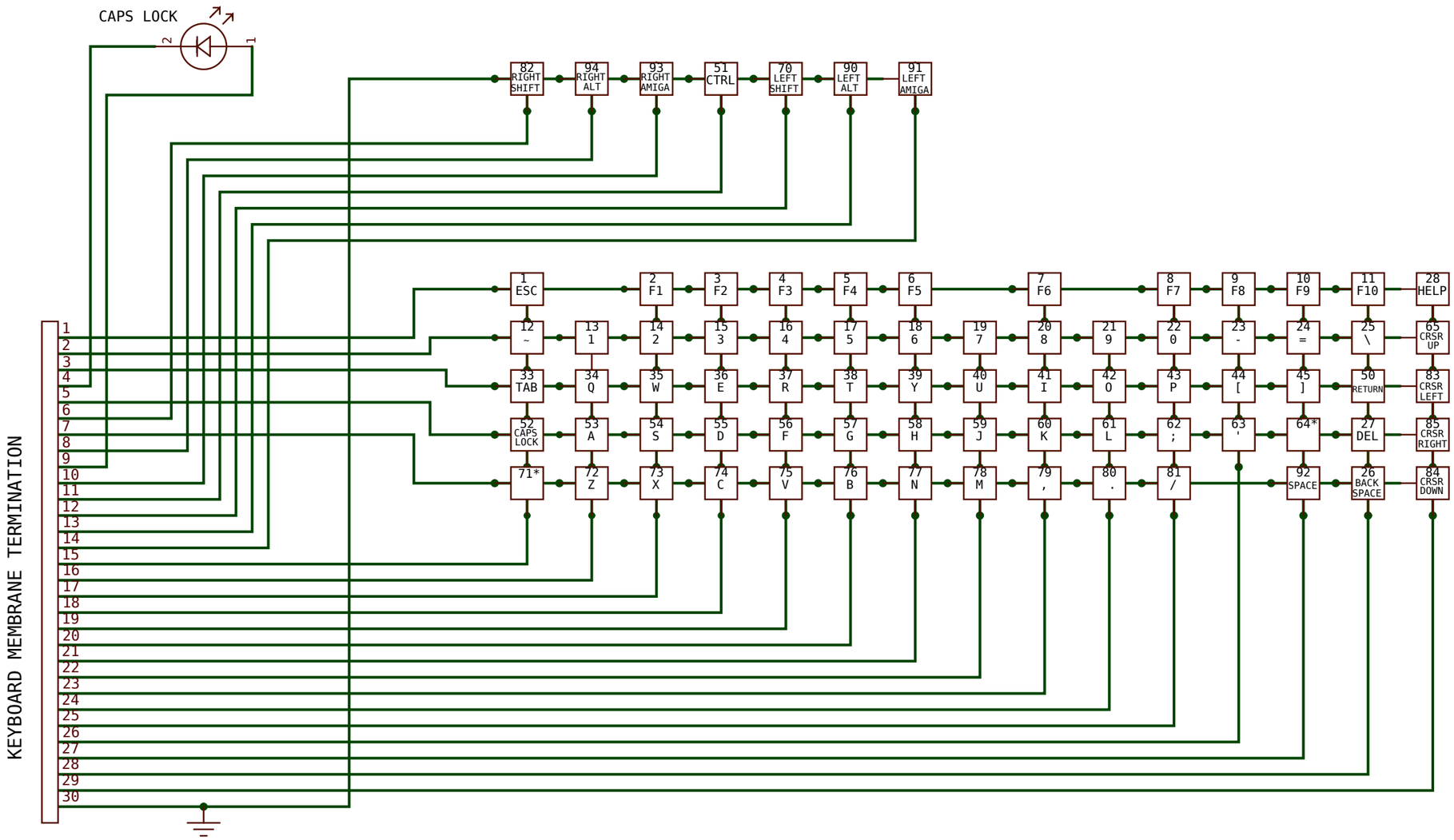

FIGURE 1

NOTES: 1)NUMBER AT TOP CENTER OF EACH BLOCK CORRESPONDS
TO KEY NUMBER IN ASSEMBLY DRAWING.
2)KEY NUMBERS 64 & 71 ARE ACTIVE ON EUROPEAN
KEYBOARDS ONLY.
3)PIN 30 OF TERMINATION CONNECTED TO GROUND FOR
EMI/RFI EMISSION REQUIREMENTS.

US VERSION (-01) SHOWN

© 1989 COMMODORE BUSINESS MACHINES
Information contained herein is the unpublished, confidential and trade secret property of Commodore Business Machines, Inc. Any use, reproduction or disclosure of this information without the prior written permission of Commodore is strictly prohibited.

C.A.D. Generated
No manual changes may be made to this document

DRAWN BY: B.FENIMORE	DATE 3/21/91	Commodore
CHKD:		A300
ENGR:GRR/BAF		KEYBOARD MEMBRANE MATRIX
APPR:		
USED ON	NEXT ASSY	SIZE A · 363748 · REV 1
		SCALE · SHEET 1 OF 1

PATH:/USER/FENIMORE/A300/A300KEYMATRIX

Rev.1.37 (02.09.2012)

© rebuild for www.amigawiki.org · for private use only