Amiga

A3000D

Rev.1.38 (03.01.2014)

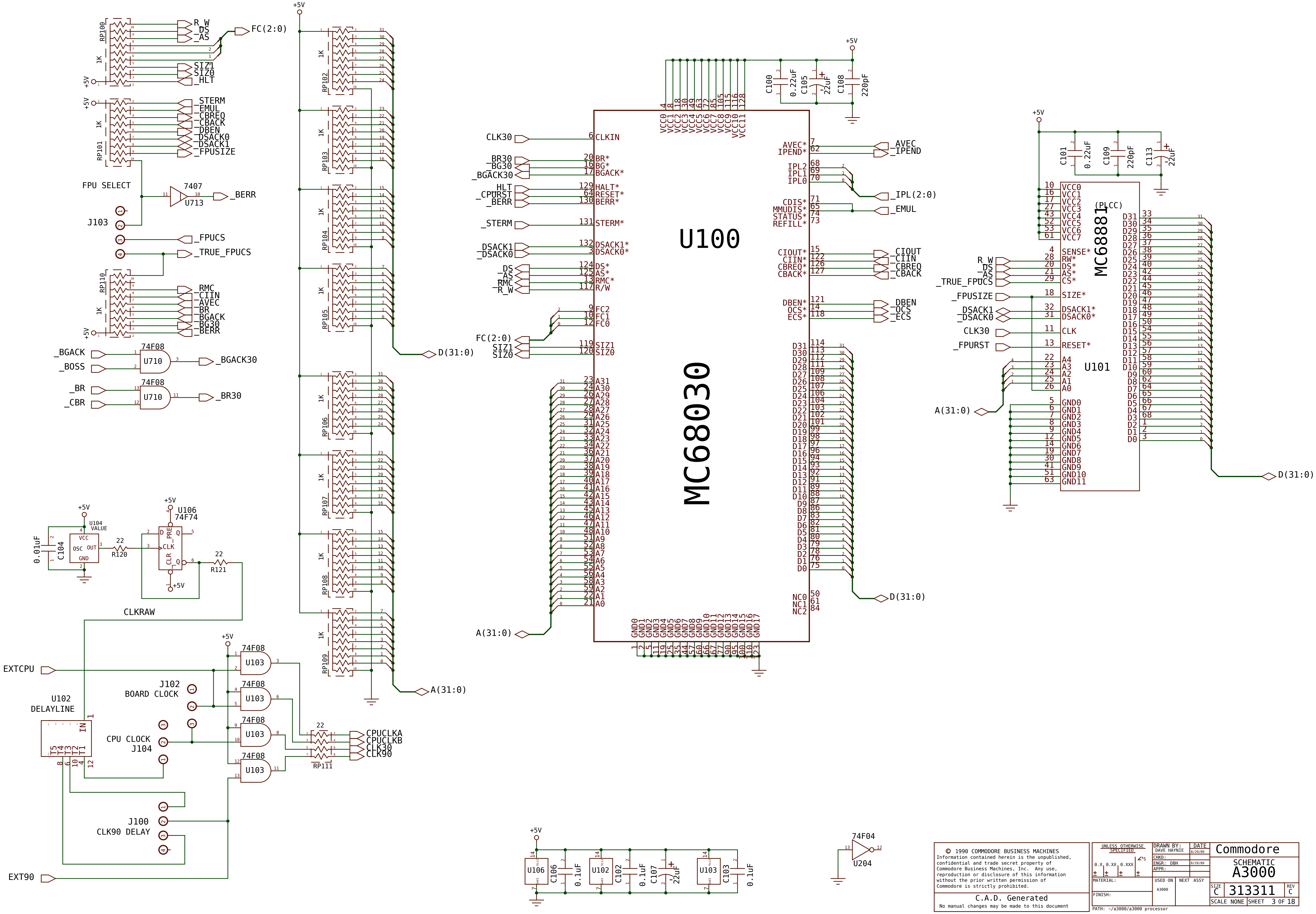

U100
MC68030
U101
MC68881
(PLCC)
CLK30
_BR30
_BG30
_BGACK30
_HLT
_CPURST
_BERR
_STERM
_DSACK1
_DSACK0
_DS
_AS
_RMC
_R_W
FC(2:0)
SIZ1
SIZ0
A(31:0)
D(31:0)
CLKIN
BR*
BG*
BGACK*
HALT*
RESET*
BERR*
STERM*
DSACK1*
DSACK0*
DS*
AS*
RMC*
R/W
FC2
FC1
FC0
AVEC*
IPEND*
IPL2
IPL1
IPL0
CDIS*
MMUDIS*
STATUS*
REFILL*
CIOUT*
CIIN*
CBREQ*
CBACK*
DBEN*
OCS*
ECS*
_AVEC
_IPEND
_IPL(2:0)
_EMUL
_CIOUT
_CIIN
_CBREQ
_CBACK
_DBEN
_OCS
_ECS
NC0
NC1
NC2
+5V
C100
0.22uF
C105
22uF
C108
220pF
C101
C109
C113
SENSE*
RW*
CS*
SIZE*
CLK
RESET*
_TRUE_FPUCS
_FPUSIZE
_FPURST
RP100
RP101
RP102
RP103
RP104
RP105
RP106
RP107
RP108
RP109
RP110
RP111
1K
_R_W
_SIZ1
_SIZ0
_HLT
_EMUL
_CBREQ
_CBACK
_DBEN
_DSACK0
_DSACK1
_RMC
_CIIN
_AVEC
_BR
_BGACK
_BG30
FPU SELECT
7407
U713
J103
_FPUCS
_BGACK
_BOSS
74F08
U710
_CBR
_BGACK30
_BR30
U104
VALUE
VCC
OSC
OUT
GND
0.01uF
C104
22
R120
U106
74F74
PRE
CLR
R121
CLKRAW
EXTCPU
U102
DELAYLINE
IN
T5
T4
T3
T2
T1
J102
BOARD CLOCK
CPU CLOCK
J104
U103
CPUCLKA
CPUCLKB
CLK30
CLK90
J100
CLK90 DELAY
EXT90
U102
C106
0.1uF
C102
C107
C103
74F04
U204

© 1990 COMMODORE BUSINESS MACHINES
Information contained herein is the unpublished, confidential and trade secret property of Commodore Business Machines, Inc. Any use, reproduction or disclosure of this information without the prior written permission of Commodore is strictly prohibited.

C.A.D. Generated
No manual changes may be made to this document

UNLESS OTHERWISE SPECIFIED
0.X ± 0.XX ± 0.XXX ± ∠'S ±
MATERIAL:
FINISH:

DRAWN BY: DAVE HAYNIE | DATE 8/29/89
CHKD:
ENGR: DBH | 8/29/89
APPR:
USED ON A3000
NEXT ASSY

Commodore
SCHEMATIC
A3000
SIZE C
313311
REV C
SCALE NONE
SHEET 3 OF 18

PATH: ~/a3000/a3000 processor

Rev.1.38 (03.01.2014)

© rebuild for www.amigawiki.org · for private use only

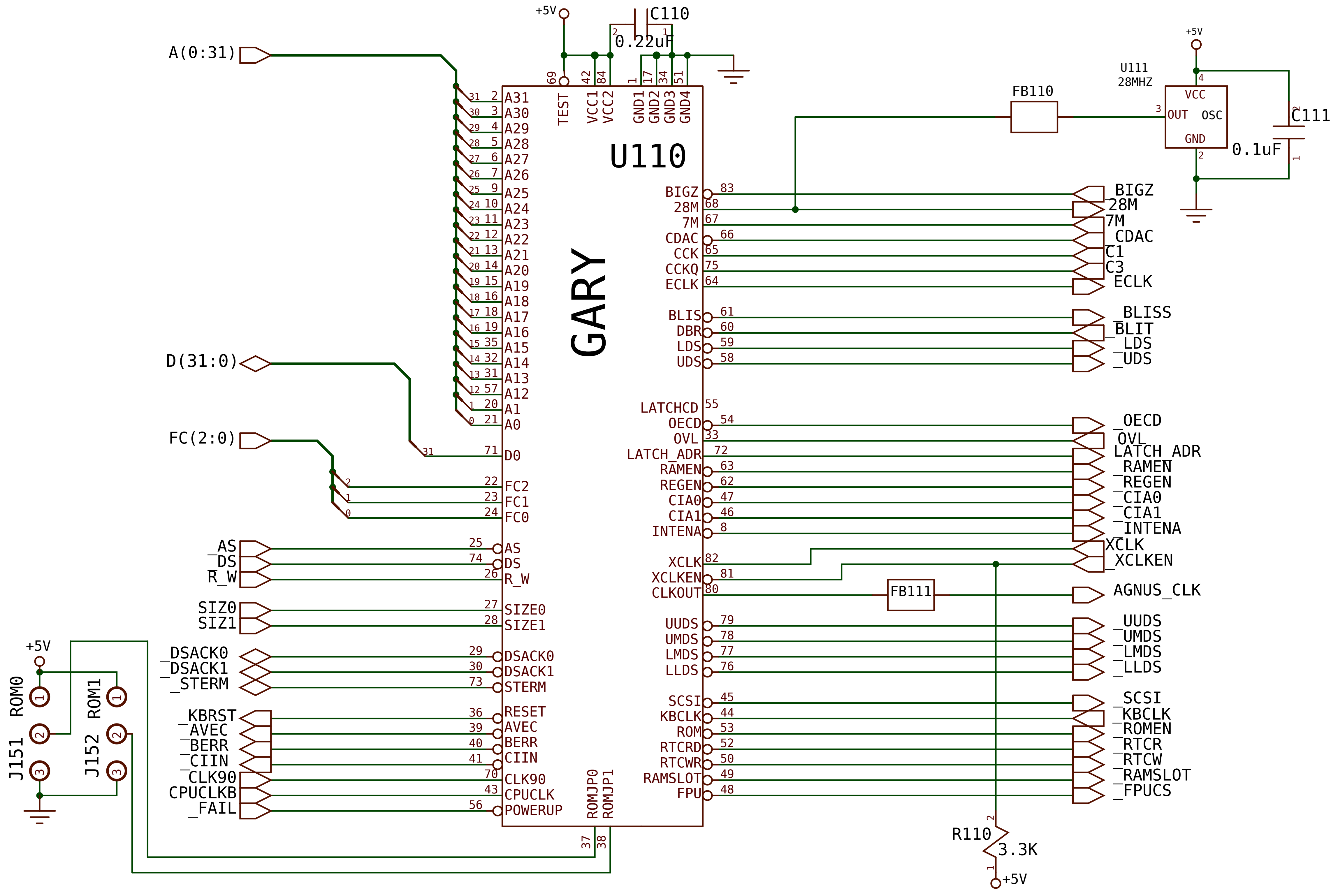
A(0:31)
D(31:0)
FC(2:0)
+5V
C110
0.22uF
U110
GARY
69 TEST
42 VCC1
84 VCC2
1 GND1
17 GND2
34 GND3
51 GND4
31 2 A31
30 3 A30
29 4 A29
28 5 A28
27 6 A27
26 7 A26
25 9 A25
24 10 A24
23 11 A23
22 12 A22
21 13 A21
20 14 A20
19 15 A19
18 16 A18
17 18 A17
16 19 A16
15 35 A15
14 32 A14
13 31 A13
12 57 A12
1 20 A1
0 21 A0
31 71 D0
2 22 FC2
1 23 FC1
0 24 FC0
_AS 25 AS
_DS 74 DS
R_W 26 R_W
SIZ0 27 SIZE0
SIZ1 28 SIZE1
_DSACK0 29 DSACK0
_DSACK1 30 DSACK1
_STERM 73 STERM
_KBRST 36 RESET
_AVEC 39 AVEC
_BERR 40 BERR
_CIIN 41 CIIN
_CLK90 70 CLK90
CPUCLKB 43 CPUCLK
_FAIL 56 POWERUP
ROMJP0 37
ROMJP1 38
J151 ROM0
J152 ROM1
1
2
3
BIGZ 83 BIGZ
28M 68 28M
7M 67 7M
CDAC 66 CDAC
CCK 65 C1
CCKQ 75 C3
ECLK 64 ECLK
BLIS 61 _BLISS
DBR 60 _BLIT
LDS 59 _LDS
UDS 58 _UDS
LATCHCD 55
OECD 54 _OECD
OVL 33 _OVL
LATCH_ADR 72 LATCH_ADR
RAMEN 63 _RAMEN
REGEN 62 _REGEN
CIA0 47 _CIA0
CIA1 46 _CIA1
INTENA 8 _INTENA
XCLK 82 XCLK
XCLKEN 81 _XCLKEN
CLKOUT 80 AGNUS_CLK
FB111
UUDS 79 _UUDS
UMDS 78 _UMDS
LMDS 77 _LMDS
LLDS 76 _LLDS
SCSI 45 _SCSI
KBCLK 44 _KBCLK
ROM 53 _ROMEN
RTCRD 52 _RTCR
RTCWR 50 _RTCW
RAMSLOT 49 _RAMSLOT
FPU 48 _FPUCS
FB110
U111
28MHZ
VCC 4
OUT 3
OSC
GND 2
C111
0.1uF
R110
3.3K
2
1

© 1990 COMMODORE BUSINESS MACHINES
Information contained herein is the unpublished, confidential and trade secret property of Commodore Business Machines, Inc. Any use, reproduction or disclosure of this information without the prior written permission of Commodore is strictly prohibited.

C.A.D. Generated

No manual changes may be made to this document

UNLESS OTHERWISE SPECIFIED
0.X 0.XX 0.XXX ∠'S
± ± ± ±
MATERIAL:
FINISH:
PATH: ~/a3000/a3000 gary

DRAWN BY: GREG BERLIN	DATE 12/15/88
CHKD:	
ENGR: GCB	12/15/88
APPR:	

USED ON A3000
NEXT ASSY

Commodore
SCHEMATIC
A3000

SIZE C 313311 REV C
SCALE NONE SHEET 4 OF 18

Rev.1.38 (03.01.2014)

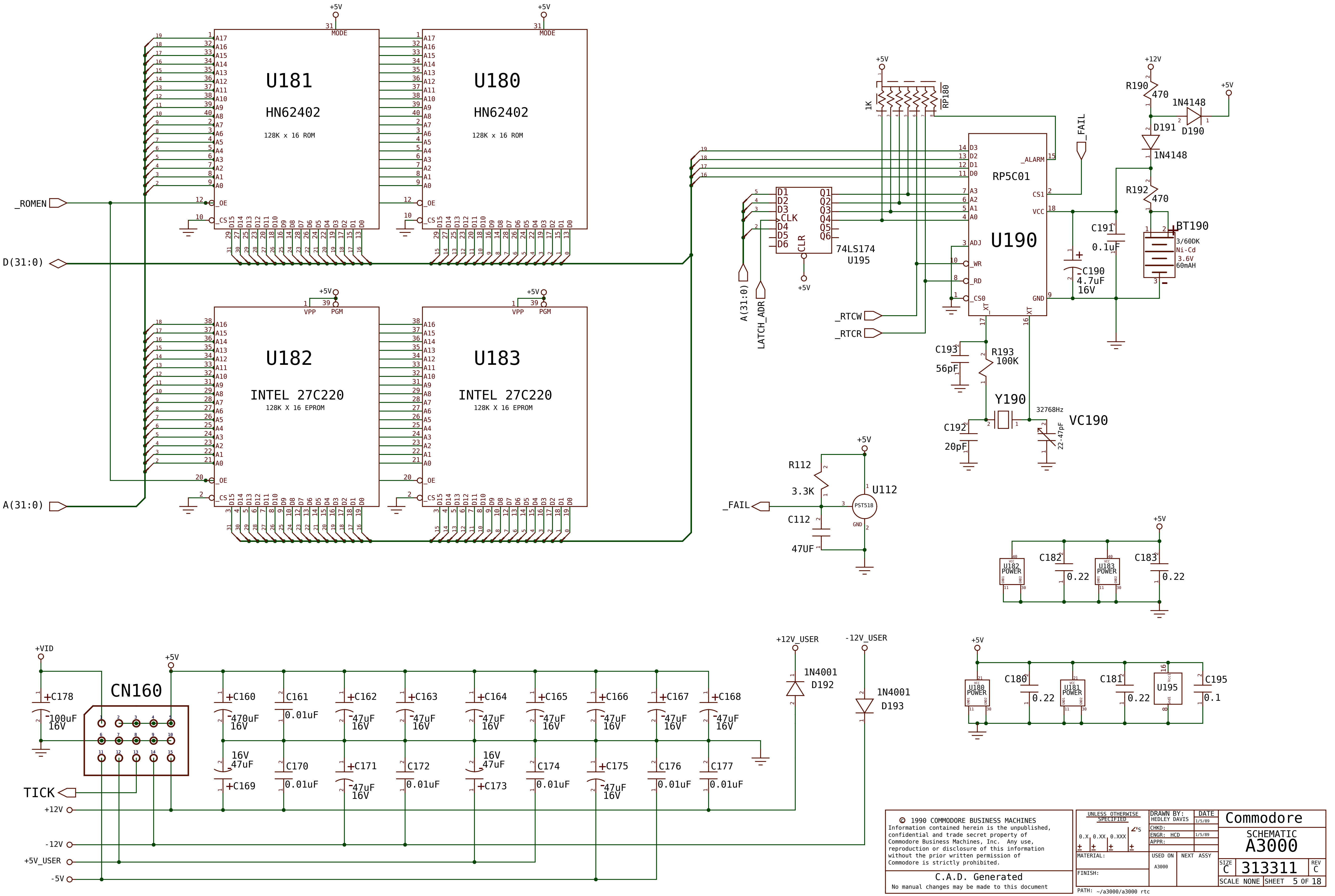
U181
HN62402
128K x 16 ROM
U180
HN62402
128K x 16 ROM
U182
INTEL 27C220
128K X 16 EPROM
U183
INTEL 27C220
128K X 16 EPROM
_ROMEN
D(31:0)
A(31:0)
+5V
MODE
VPP
PGM
_OE
_CS
U190
RP5C01
_ALARM
CS1
VCC
GND
ADJ
_WR
_RD
_CS0
XT
_XT
_FAIL
RP180
1K
74LS174
U195
CLR
A(31:0)
LATCH_ADR
_RTCW
_RTCR
R190
470
1N4148
D190
D191
R192
470
BT190
3/60DK
Ni-Cd
3.6V
60mAH
+12V
C191
0.1uF
C190
4.7uF
16V
C193
56pF
R193
100K
Y190
32768Hz
C192
20pF
VC190
22-47pF
R112
3.3K
U112
PST518
C112
47UF
U182 POWER
U183 POWER
C182
0.22
C183
0.22
U180 POWER
U181 POWER
C180
0.22
C181
0.22
U195
C195
0.1
+VID
CN160
C178
100uF
16V
C160
470uF
16V
C161
0.01uF
C162
C163
C164
C165
C166
C167
C168
47uF
16V
C169
C170
C171
C172
C173
C174
C175
C176
C177
+12V_USER
-12V_USER
1N4001
D192
D193
TICK
+12V
-12V
+5V_USER
-5V

© 1990 COMMODORE BUSINESS MACHINES
Information contained herein is the unpublished, confidential and trade secret property of Commodore Business Machines, Inc. Any use, reproduction or disclosure of this information without the prior written permission of Commodore is strictly prohibited.

C.A.D. Generated
No manual changes may be made to this document

UNLESS OTHERWISE SPECIFIED
0.X 0.XX 0.XXX ∠'S
± ± ± ±
MATERIAL:
FINISH:
PATH: ~/a3000/a3000 rtc

DRAWN BY: HEDLEY DAVIS	DATE 1/5/89
CHKD:	
ENGR: HCD	1/5/89
APPR:	

USED ON
A3000
NEXT ASSY

Commodore
SCHEMATIC
A3000
SIZE C
313311
REV C
SCALE NONE
SHEET 5 OF 18

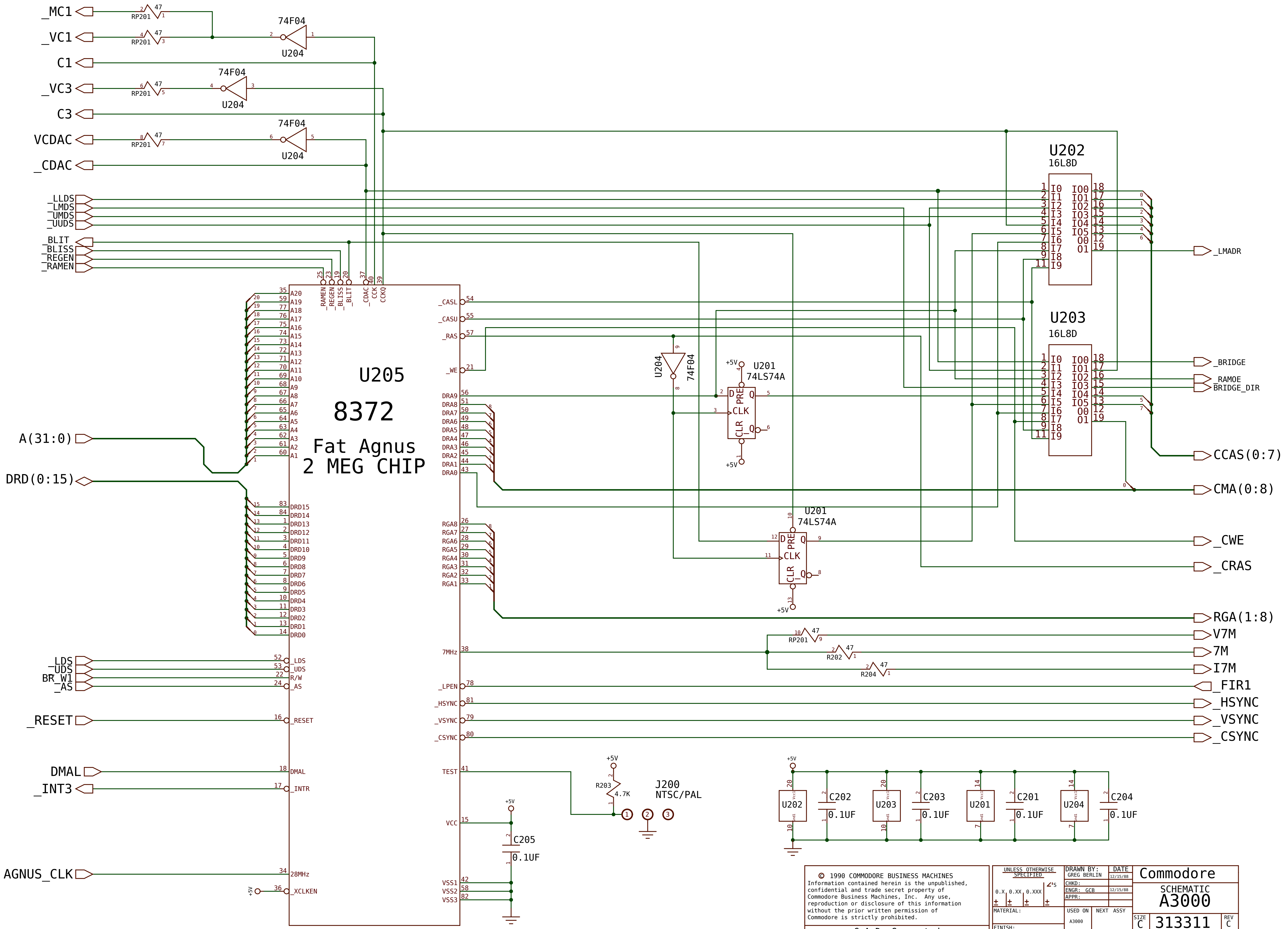
_MC1
_VC1
C1
_VC3
C3
VCDAC
_CDAC
_LLDS
_LMDS
_UMDS
_UUDS
_BLIT
_BLISS
_REGEN
_RAMEN
RP201
47
74F04
U204
U202
16L8D
U203
16L8D
I0
I1
I2
I3
I4
I5
I6
I7
I8
I9
IO0
IO1
IO2
IO3
IO4
IO5
O0
O1
_LMADR
_BRIDGE
_RAMOE
BRIDGE_DIR
CCAS(0:7)
CMA(0:8)
_CWE
_CRAS
RGA(1:8)
V7M
7M
I7M
_FIR1
_HSYNC
_VSYNC
_CSYNC
U205
8372
Fat Agnus
2 MEG CHIP
A(31:0)
DRD(0:15)
_LDS
_UDS
BR_W1
_AS
R/W
_RESET
DMAL
_INT3
AGNUS_CLK
28MHz
_XCLKEN
_CASL
_CASU
_RAS
_WE
DRA9
DRA8
DRA7
DRA6
DRA5
DRA4
DRA3
DRA2
DRA1
DRA0
RGA8
RGA7
RGA6
RGA5
RGA4
RGA3
RGA2
RGA1
7MHz
_LPEN
TEST
VCC
VSS1
VSS2
VSS3
_RAMEN
_REGEN
_BLISS
_BLIT
_CDAC
CCK
CCKQ
U201
74LS74A
D
Q
PRE
CLK
CLR
+5V
R202
R204
R203
4.7K
J200
NTSC/PAL
C205
C202
C203
C201
C204
0.1UF
Vcc
Gnd

© 1990 COMMODORE BUSINESS MACHINES
Information contained herein is the unpublished, confidential and trade secret property of Commodore Business Machines, Inc. Any use, reproduction or disclosure of this information without the prior written permission of Commodore is strictly prohibited.

C.A.D. Generated
No manual changes may be made to this document

UNLESS OTHERWISE SPECIFIED
0.X 0.XX 0.XXX ∠'S
± ± ± ±
MATERIAL:
FINISH:
DRAWN BY: GREG BERLIN
DATE 12/15/88
CHKD:
ENGR: GCB 12/15/88
APPR:
USED ON A3000
NEXT ASSY
Commodore
SCHEMATIC
A3000
SIZE C
313311
REV C
SCALE NONE
SHEET 6 OF 17
PATH: ~/a3000/a3000 agnus

Rev.1.38 (03.01.2014)

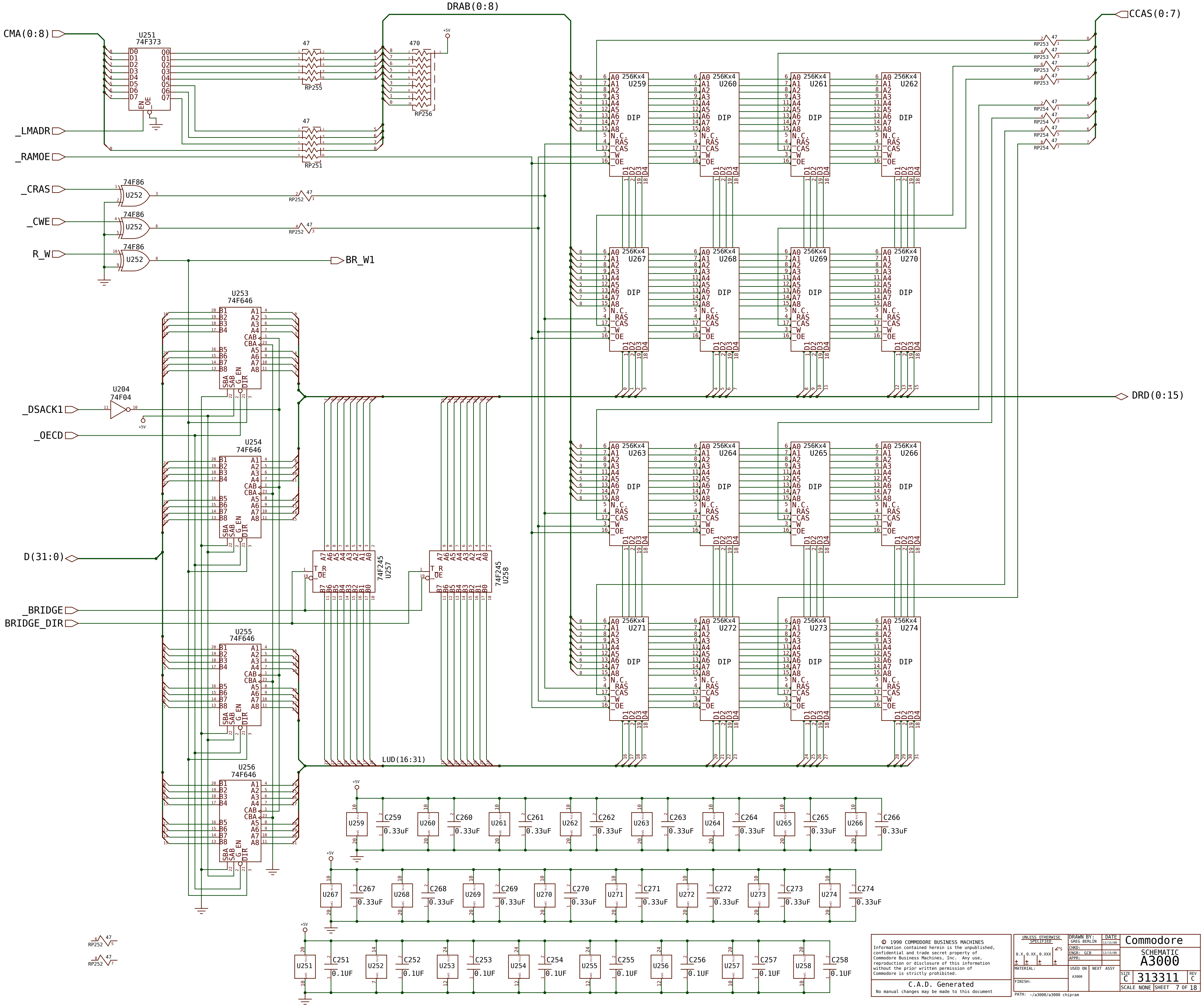
CMA(0:8)
U251
74F373
_LMADR
_RAMOE
_CRAS
_CWE
R_W
74F86
U252
BR_W1
DRAB(0:8)
47
RP255
470
RP256
+5V
RP251
RP252
CCAS(0:7)
RP253
RP254
256Kx4
U259
U260
U261
U262
U267
U268
U269
U270
U263
U264
U265
U266
U271
U272
U273
U274
DIP
A0 A1 A2 A3 A4 A5 A6 A7 A8
N.C.
RAS
CAS
W
OE
D1 D2 D3 D4
DRD(0:15)
U253
74F646
U254
74F646
U255
74F646
U256
74F646
B1 B2 B3 B4 B5 B6 B7 B8
A1 A2 A3 A4 A5 A6 A7 A8
CAB
CBA
SBA
SAB
G
EN
DIR
U204
74F04
_DSACK1
_OECD
D(31:0)
74F245
U257
74F245
U258
T_R
OE
_BRIDGE
BRIDGE_DIR
LUD(16:31)
C259
C260
C261
C262
C263
C264
C265
C266
C267
C268
C269
C270
C271
C272
C273
C274
0.33uF
C251
C252
C253
C254
C255
C256
C257
C258
0.1UF

© 1990 COMMODORE BUSINESS MACHINES
Information contained herein is the unpublished, confidential and trade secret property of Commodore Business Machines, Inc. Any use, reproduction or disclosure of this information without the prior written permission of Commodore is strictly prohibited.

C.A.D. Generated

No manual changes may be made to this document

UNLESS OTHERWISE SPECIFIED	DRAWN BY: GREG BERLIN	DATE 12/15/88	Commodore
0.X 0.XX 0.XXX ∠'S	CHKD:		SCHEMATIC A3000
± ± ± ±	ENGR: GCB	12/15/88	
	APPR:		
MATERIAL:	USED ON A3000	NEXT ASSY	SIZE C · 313311 · REV C
FINISH:			SCALE NONE · SHEET 7 OF 18

PATH: ~/a3000/a3000 chipram

Rev.1.38 (03.01.2014)

EXTERNAL SERIAL

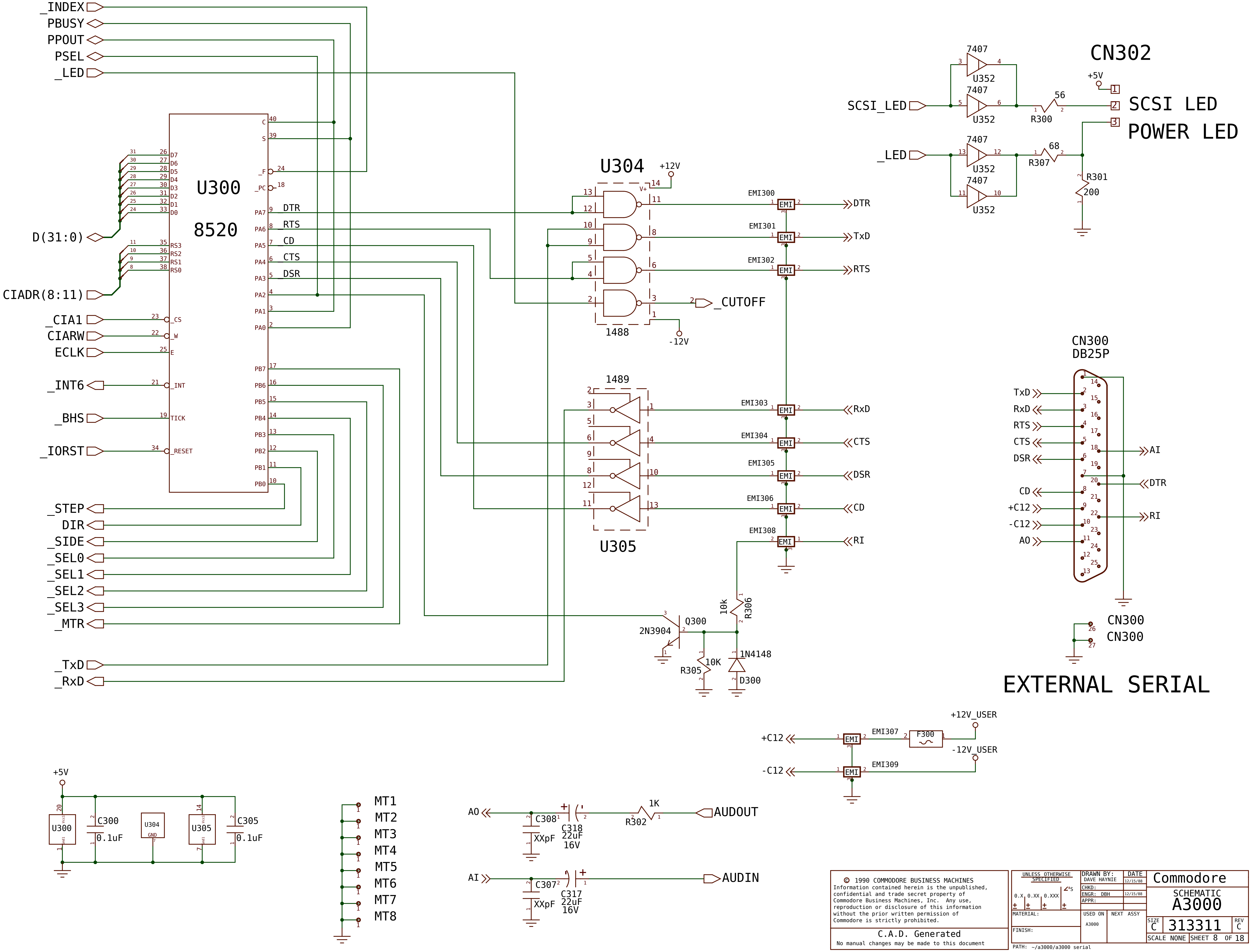
_INDEX
PBUSY
PPOUT
PSEL
_LED
D(31:0)
CIADR(8:11)
_CIA1
CIARW
ECLK
_INT6
_BHS
_IORST
U300
8520
D7
D6
D5
D4
D3
D2
D1
D0
RS3
RS2
RS1
RS0
_CS
_W
E
_INT
TICK
_RESET
C
S
_F
_PC
PA7
PA6
PA5
PA4
PA3
PA2
PA1
PA0
PB7
PB6
PB5
PB4
PB3
PB2
PB1
PB0
DTR
RTS
CD
CTS
DSR
_STEP
DIR
_SIDE
_SEL0
_SEL1
_SEL2
_SEL3
_MTR
_TxD
_RxD
U304
+12V
V+
1488
-12V
_CUTOFF
1489
U305
EMI300
EMI301
EMI302
EMI303
EMI304
EMI305
EMI306
EMI308
EMI
DTR
TxD
RTS
RxD
CTS
DSR
CD
RI
Q300
2N3904
10k
R306
10K
R305
1N4148
D300
7407
U352
SCSI_LED
_LED
56
R300
68
R307
R301
200
CN302
+5V
SCSI LED
POWER LED
CN300
DB25P
TxD
RxD
RTS
CTS
DSR
CD
+C12
-C12
A0
AI
DTR
RI
CN300
CN300
+12V_USER
-12V_USER
+C12
-C12
EMI307
EMI309
F300
A0
C308
XXpF
C318
22uF
16V
1K
R302
AUDOUT
AI
C307
XXpF
C317
22uF
16V
AUDIN
+5V
U300
C300
0.1uF
U304
GND
U305
C305
0.1uF
MT1
MT2
MT3
MT4
MT5
MT6
MT7
MT8

© 1990 COMMODORE BUSINESS MACHINES
Information contained herein is the unpublished, confidential and trade secret property of Commodore Business Machines, Inc. Any use, reproduction or disclosure of this information without the prior written permission of Commodore is strictly prohibited.

C.A.D. Generated

No manual changes may be made to this document

UNLESS OTHERWISE SPECIFIED
0.X ± 0.XX ± 0.XXX ± ∠'S ±
MATERIAL:
FINISH:
DRAWN BY: DAVE HAYNIE DATE 12/15/88
CHKD:
ENGR: DBH 12/15/88
APPR:
USED ON A3000
NEXT ASSY
Commodore
SCHEMATIC
A3000
SIZE C 313311 REV C
SCALE NONE SHEET 8 OF 18
PATH: ~/a3000/a3000 serial

Rev.1.38 (03.01.2014)

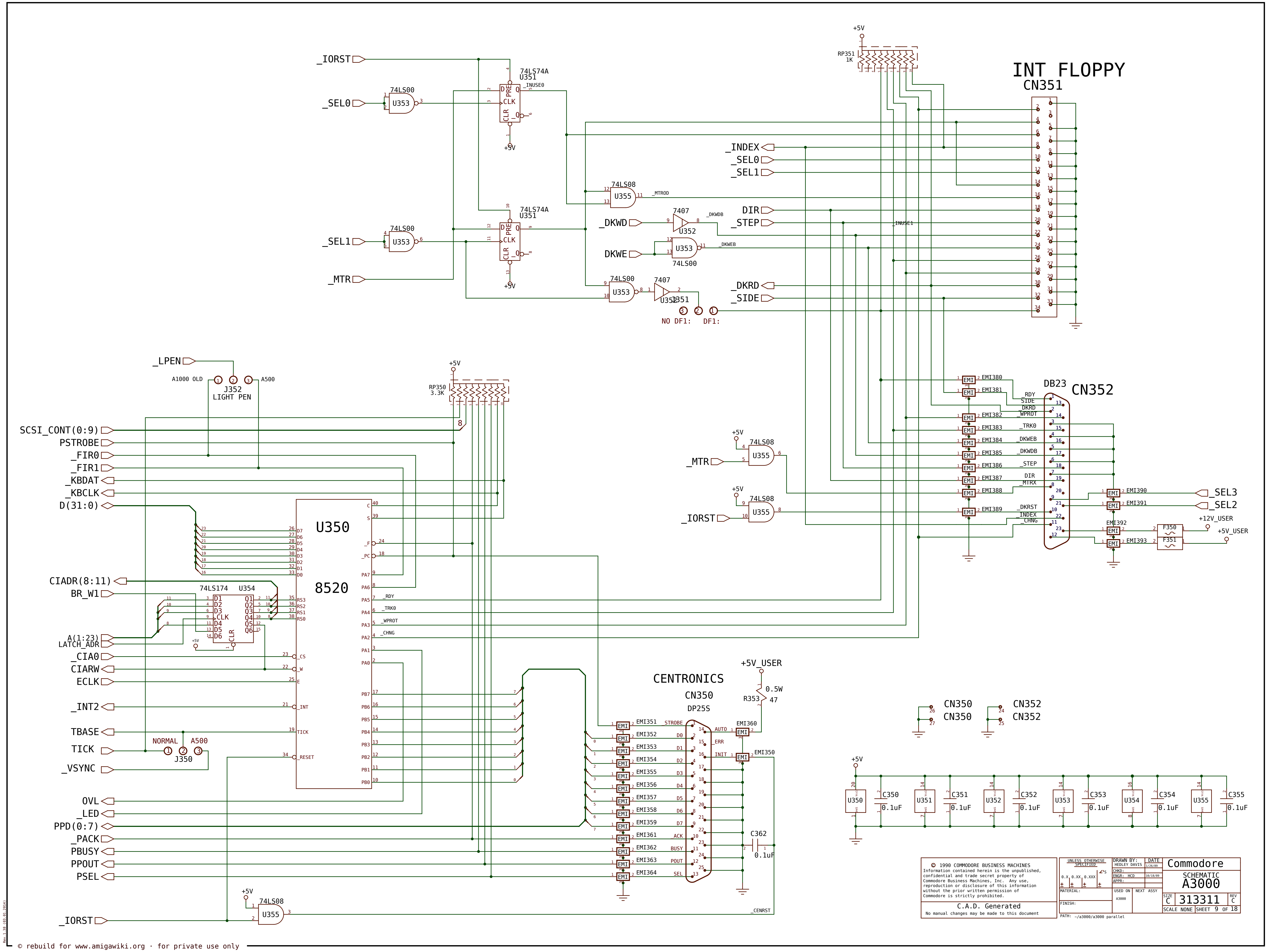
INT FLOPPY
CN351
_IORST
_SEL0
_SEL1
_MTR
74LS00
U353
74LS74A
U351
PRE
CLK
CLR
D
Q
_INUSE0
_INUSE1
+5V
RP351
1K
_INDEX
_SEL0
_SEL1
DIR
_STEP
_DKWD
DKWE
_DKRD
_SIDE
74LS08
U355
_MTR0
7407
U352
_DKWDB
_DKWEB
NO DF1:
DF1:
_LPEN
A1000 OLD
A500
J352
LIGHT PEN
RP350
3.3K
SCSI_CONT(0:9)
PSTROBE
_FIR0
_FIR1
_KBDAT
_KBCLK
D(31:0)
U350
8520
CIADR(8:11)
BR_W1
74LS174
U354
A(1:23)
LATCH_ADR
_CIA0
CIARW
ECLK
_INT2
TBASE
TICK
_VSYNC
NORMAL
A500
J350
OVL
_LED
PPD(0:7)
_PACK
PBUSY
PPOUT
PSEL
_IORST
_RDY
_TRK0
_WPROT
_CHNG
_CS
_W
E
_INT
TICK
_RESET
_F
_PC
PA7 PA6 PA5 PA4 PA3 PA2 PA1 PA0
PB7 PB6 PB5 PB4 PB3 PB2 PB1 PB0
RS3 RS2 RS1 RS0
DB23
CN352
EMI380
EMI381
EMI382
EMI383
EMI384
EMI385
EMI386
EMI387
EMI388
EMI389
EMI390
EMI391
EMI392
EMI393
_SEL3
_SEL2
+12V_USER
+5V_USER
F350
F351
_SIDE
_DKRD
_DKWEB
_DKWDB
_STEP
_MTRX
_DKRST
_INDEX
CENTRONICS
CN350
DP25S
+5V_USER
R353
0.5W
47
EMI351
EMI352
EMI353
EMI354
EMI355
EMI356
EMI357
EMI358
EMI359
EMI361
EMI362
EMI363
EMI364
EMI360
EMI350
STROBE
D0 D1 D2 D3 D4 D5 D6 D7
ACK
BUSY
POUT
SEL
AUTO
_ERR
INIT
C362
0.1uF
_CENRST
CN350
CN352
C350
C351
C352
C353
C354
C355
0.1uF
U350 U351 U352 U353 U354 U355

Rev.1.38 (03.01.2014)

© rebuild for www.amigawiki.org · for private use only

© 1990 COMMODORE BUSINESS MACHINES
Information contained herein is the unpublished, confidential and trade secret property of Commodore Business Machines, Inc. Any use, reproduction or disclosure of this information without the prior written permission of Commodore is strictly prohibited.

C.A.D. Generated
No manual changes may be made to this document

UNLESS OTHERWISE SPECIFIED
0.X ± 0.XX ± 0.XXX ± ∠'S ±
MATERIAL:
FINISH:
DRAWN BY: HEDLEY DAVIS
DATE 1/26/89
CHKD:
ENGR: HCD 10/18/89
APPR:
USED ON A3000
NEXT ASSY
Commodore
SCHEMATIC
A3000
SIZE C
313311
REV C
SCALE NONE
SHEET 9 OF 18
PATH: ~/a3000/a3000 parallel

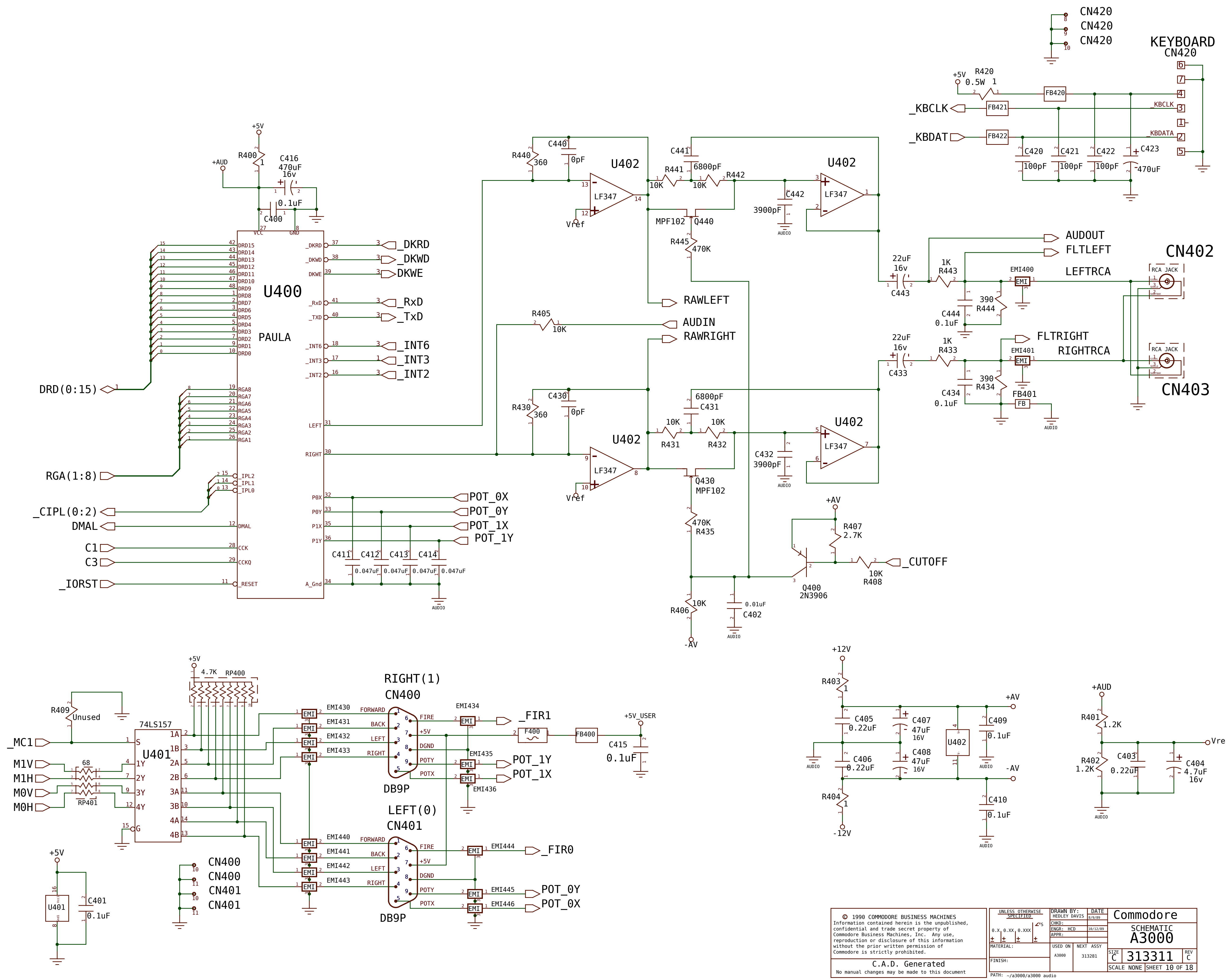

CN420
CN420
CN420
KEYBOARD
CN420
+5V
R420
0.5W
FB420
_KBCLK
FB421
_KBDAT
FB422
_KBCLK
_KBDATA
C420
100pF
C421
100pF
C422
100pF
C423
470uF
+5V
R400
C416
470uF
16v
+AUD
0.1uF
C400
U400
PAULA
DRD15
DRD14
DRD13
DRD12
DRD11
DRD10
DRD9
DRD8
DRD7
DRD6
DRD5
DRD4
DRD3
DRD2
DRD1
DRD0
RGA8
RGA7
RGA6
RGA5
RGA4
RGA3
RGA2
RGA1
_IPL2
_IPL1
_IPL0
DMAL
CCK
CCKQ
_RESET
_DKRD
_DKWD
DKWE
_RxD
_TxD
_INT6
_INT3
_INT2
LEFT
RIGHT
P0X
P0Y
P1X
P1Y
A_Gnd
VCC
GND
DRD(0:15)
RGA(1:8)
_CIPL(0:2)
DMAL
C1
C3
_IORST
_DKRD
_DKWD
DKWE
_RxD
_TxD
_INT6
_INT3
_INT2
POT_0X
POT_0Y
POT_1X
POT_1Y
C411
C412
C413
C414
0.047uF
0.047uF
0.047uF
0.047uF
AUDIO
R440
360
C440
0pF
U402
LF347
Vref
C441
6800pF
R441
10K
R442
10K
C442
3900pF
MPF102
Q440
R445
470K
RAWLEFT
R405
10K
AUDIN
RAWRIGHT
R430
360
C430
0pF
C431
6800pF
R431
10K
R432
10K
C432
3900pF
Q430
MPF102
R435
470K
R406
10K
-AV
C402
0.01uF
+AV
R407
2.7K
Q400
2N3906
R408
10K
_CUTOFF
AUDOUT
FLTLEFT
CN402
22uF
16v
C443
1K
R443
EMI400
LEFTRCA
RCA JACK
C444
0.1uF
390
R444
FLTRIGHT
22uF
16v
C433
1K
R433
EMI401
RIGHTRCA
C434
0.1uF
390
R434
FB401
FB
CN403
+5V
4.7K
RP400
R409
Unused
74LS157
U401
_MC1
M1V
M1H
M0V
M0H
68
RP401
S
1A
1B
2A
2B
3A
3B
4A
4B
1Y
2Y
3Y
4Y
G
RIGHT(1)
CN400
EMI430
EMI431
EMI432
EMI433
FORWARD
BACK
LEFT
RIGHT
FIRE
+5V
DGND
POTY
POTX
DB9P
EMI434
_FIR1
EMI435
EMI436
POT_1Y
POT_1X
F400
FB400
+5V_USER
C415
0.1uF
LEFT(0)
CN401
EMI440
EMI441
EMI442
EMI443
FORWARD
BACK
LEFT
RIGHT
FIRE
+5V
DGND
POTY
POTX
DB9P
EMI444
_FIR0
EMI445
EMI446
POT_0Y
POT_0X
+5V
U401
C401
0.1uF
CN400
CN400
CN401
CN401
+12V
R403
C405
0.22uF
C407
47uF
16V
C409
0.1uF
U402
C406
0.22uF
C408
47uF
16V
R404
-12V
C410
0.1uF
+AV
-AV
+AUD
R401
1.2K
R402
1.2K
C403
0.22uF
C404
4.7uF
16v
Vref

© 1990 COMMODORE BUSINESS MACHINES
Information contained herein is the unpublished, confidential and trade secret property of Commodore Business Machines, Inc. Any use, reproduction or disclosure of this information without the prior written permission of Commodore is strictly prohibited.

C.A.D. Generated
No manual changes may be made to this document

UNLESS OTHERWISE SPECIFIED	DRAWN BY: HEDLEY DAVIS	DATE 8/9/89	Commodore
0.X ± 0.XX ± 0.XXX ± ∠'S ±	CHKD:		SCHEMATIC A3000
	ENGR: HCD	10/12/89	
	APPR:		
MATERIAL:	USED ON A3000	NEXT ASSY 313281	SIZE C 313311 REV C
FINISH:			SCALE NONE SHEET 10 OF 18

PATH: ~/a3000/a3000 audio

Rev.1.38 (03.01.2014)

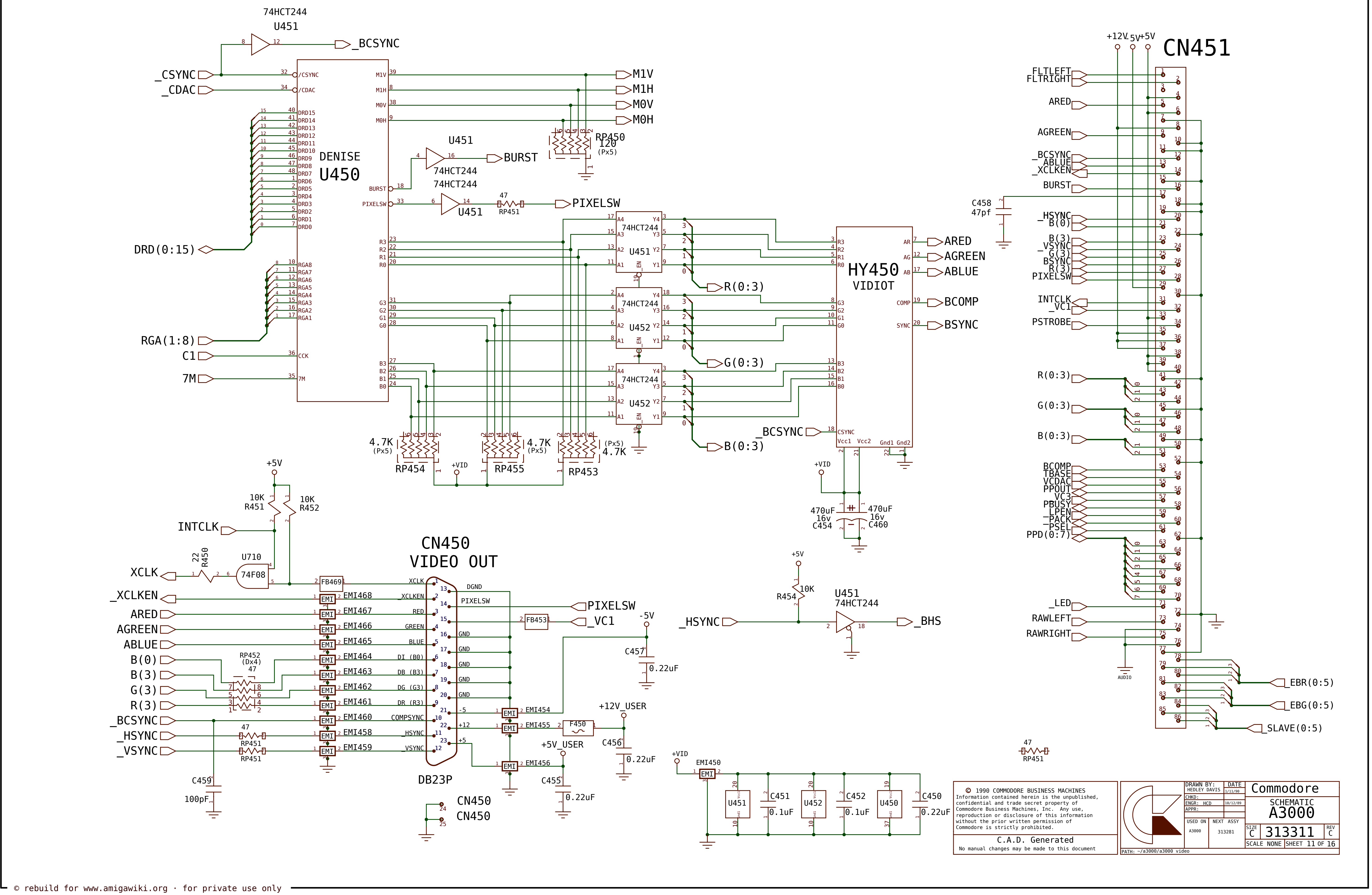
74HCT244
U451
_BCSYNC
_CSYNC
_CDAC
/CSYNC
/CDAC
M1V
M1H
M0V
M0H
DENISE
U450
DRD15
DRD14
DRD13
DRD12
DRD11
DRD10
DRD9
DRD8
DRD7
DRD6
DRD5
DRD4
DRD3
DRD2
DRD1
DRD0
DRD(0:15)
RGA8
RGA7
RGA6
RGA5
RGA4
RGA3
RGA2
RGA1
RGA(1:8)
C1
CCK
7M
RP450
120
(Px5)
BURST
PIXELSW
47
RP451
U451
74HCT244
R3
R2
R1
R0
G3
G2
G1
G0
B3
B2
B1
B0
U452
74HCT244
R(0:3)
G(0:3)
B(0:3)
HY450
VIDIOT
ARED
AGREEN
ABLUE
BCOMP
BSYNC
CSYNC
Vcc1
Vcc2
Gnd1
Gnd2
4.7K
(Px5)
RP454
RP455
RP453
+VID
470uF
16v
C454
C460
+5V
10K
R451
R452
INTCLK
XCLK
22
R450
U710
74F08
FB469
CN450
VIDEO OUT
_XCLKEN
ARED
AGREEN
ABLUE
B(0)
B(3)
G(3)
R(3)
_BCSYNC
_HSYNC
_VSYNC
EMI468
EMI467
EMI466
EMI465
EMI464
EMI463
EMI462
EMI461
EMI460
EMI458
EMI459
RP452
(Dx4)
47
XCLK
_XCLKEN
RED
GREEN
BLUE
DI (B0)
DB (B3)
DG (G3)
DR (R3)
COMPSYNC
_HSYNC
_VSYNC
DGND
PIXELSW
GND
-5
+12
+5
DB23P
EMI454
EMI455
EMI456
FB453
_VC1
-5V
C457
0.22uF
+12V_USER
F450
C456
+5V_USER
C455
C459
100pF
CN450
+5V
10K
R454
U451
74HCT244
_HSYNC
_BHS
EMI450
U451
U452
U450
C451
0.1uF
C452
0.1uF
C450
0.22uF
CN451
+12V
-5V
+5V
FLTLEFT
FLTRIGHT
ARED
AGREEN
_BCSYNC
_ABLUE
_XCLKEN
BURST
C458
47pf
_HSYNC
_B(0)
B(3)
_VSYNC
_G(3)
BSYNC
_R(3)
PIXELSW
INTCLK
_VC1
PSTROBE
R(0:3)
G(0:3)
B(0:3)
BCOMP
TBASE
VCDAC
PPOUT
VC3
PBUSY
_LPEN
_PACK
_PSEL
PPD(0:7)
_LED
RAWLEFT
RAWRIGHT
AUDIO
_EBR(0:5)
_EBG(0:5)
_SLAVE(0:5)
Rev.1.38 (03.01.2014)

© 1990 COMMODORE BUSINESS MACHINES
Information contained herein is the unpublished, confidential and trade secret property of Commodore Business Machines, Inc. Any use, reproduction or disclosure of this information without the prior written permission of Commodore is strictly prohibited.

C.A.D. Generated
No manual changes may be made to this document

DRAWN BY: HEDLEY DAVIS	DATE 1/11/90	Commodore
CHKD:		SCHEMATIC A3000
ENGR: HCD	10/12/89	
APPR:		
USED ON A3000	NEXT ASSY 313281	SIZE C · 313311 · REV C
		SCALE NONE · SHEET 11 OF 16

PATH: ~/a3000/a3000 video

© rebuild for www.amigawiki.org · for private use only

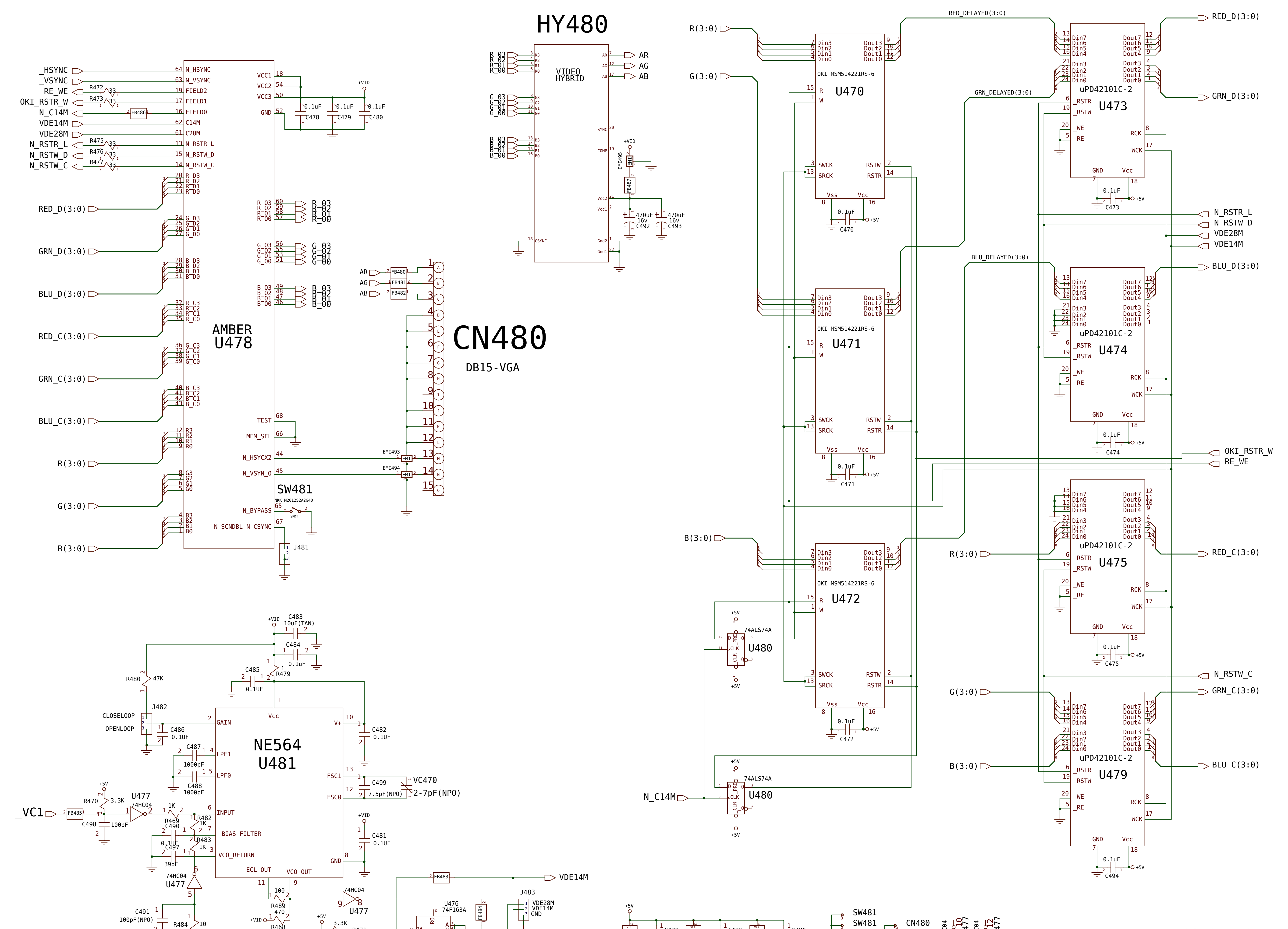
HY480
VIDEO HYBRID
AR
AG
AB
AMBER U478
CN480
DB15-VGA
SW481
NKK M2012S2A2G40
J481
NE564 U481
J482
CLOSELOOP
OPENLOOP
VC470
VR470
PHASE_ADJUST
74HC04 U477
U476 74F163A
J483
VDE14M
VDE28M
_VC1
OKI MSM514221RS-6
U470
U471
U472
uPD42101C-2
U473
U474
U475
U479
74ALS74A U480
RED_DELAYED(3:0)
GRN_DELAYED(3:0)
BLU_DELAYED(3:0)
R(3:0)
G(3:0)
B(3:0)
RED_D(3:0)
GRN_D(3:0)
BLU_D(3:0)
RED_C(3:0)
GRN_C(3:0)
BLU_C(3:0)
_HSYNC
_VSYNC
RE_WE
OKI_RSTR_W
N_C14M
VDE14M
VDE28M
N_RSTR_L
N_RSTW_D
N_RSTW_C
N_BYPASS
N_SCNDBL_N_CSYNC
C477 0.1uF
C476 0.1uF
C495 0.1uF

A3000 Display Enhancer Circuitry

© 1991 COMMODORE BUSINESS MACHINES
Information contained herein is the unpublished, confidential and trade secret property of Commodore Business Machines, Inc. Any use, reproduction or disclosure of this information without the prior written permission of Commodore is strictly prohibited.

C.A.D. Generated
No manual changes may be made to this document

DRAWN BY: SCOTT HOOD	DATE 9/6/90	Commodore	
CHKD:		SCHEMATIC A3000	
ENGR: S. HOOD	7/25/89		
APPR:			
USED ON A3000	NEXT ASSY 31xxxx	SIZE C	313311
		SCALE NONE	SHEET 12 OF 18

REV C

PATH: ~/a3000/a3000 vde

© rebuild for www.amigawiki.org · for private use only

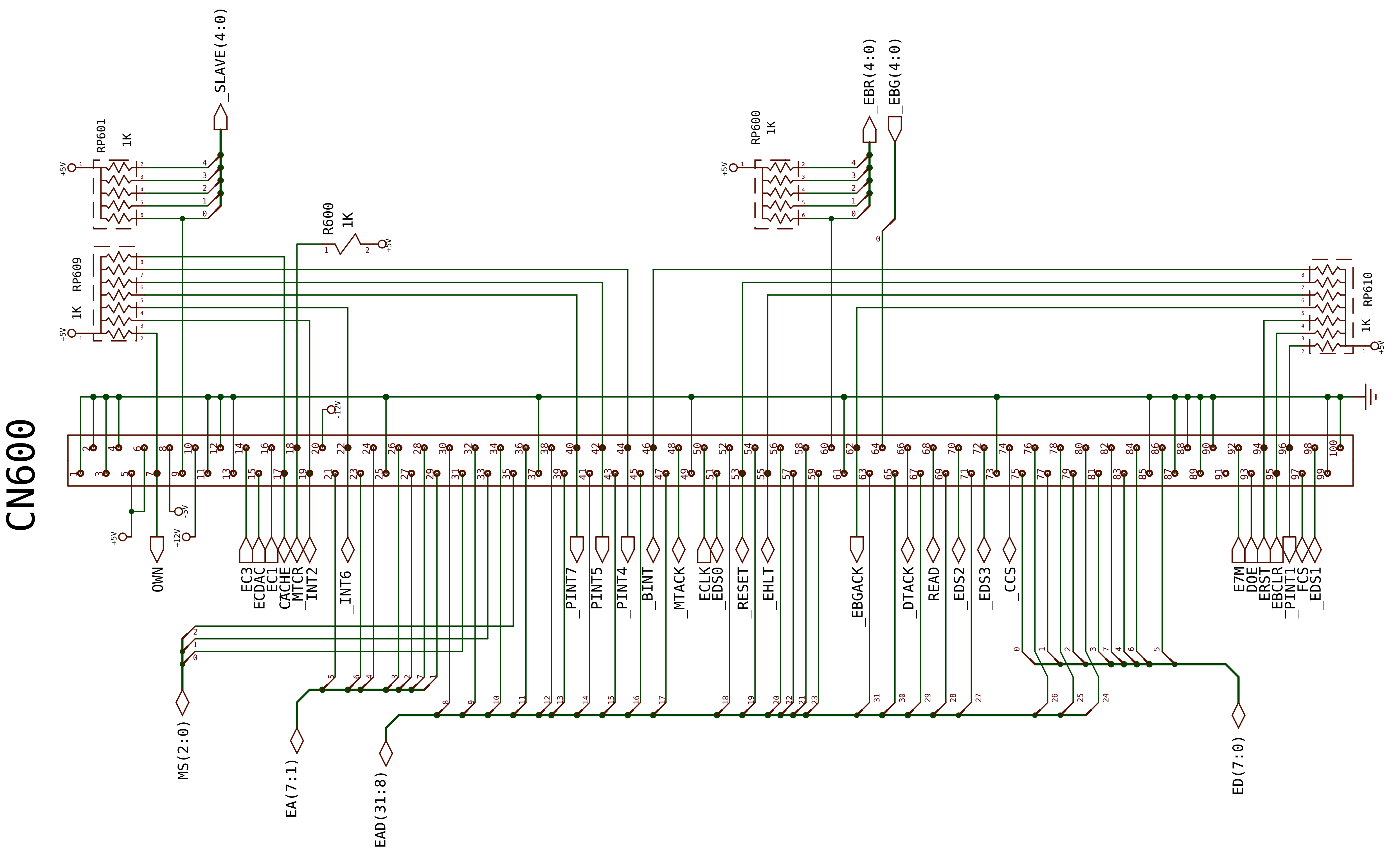
CN600
_SLAVE(4:0)
RP601 1K
RP609 1K
R600 1K
RP600 1K
_EBR(4:0)
_EBG(4:0)
RP610 1K
+5V
-5V
+12V
-12V
_OWN
EC3
ECDAC
EC1
CACHE
_MTCR
_INT2
_INT6
_PINT7
_PINT5
_PINT4
_BINT
_MTACK
ECLK
EDS0
_RESET
_EHLT
_EBGACK
_DTACK
READ
_EDS2
_EDS3
_CCS
E7M
DOE
ERST
EBCLR
_PINT1
FCS
_EDS1
MS(2:0)
EA(7:1)
EAD(31:8)
ED(7:0)

© 1990 COMMODORE BUSINESS MACHINES
Information contained herein is the unpublished,
confidential and trade secret property of
Commodore Business Machines, Inc. Any use,
reproduction or disclosure of this information
without the prior written permission of
Commodore is strictly prohibited.

C.A.D. Generated
No manual changes may be made to this document

DRAWN BY:	DATE
DAVE HAYNIE	8/29/89
CHKD:	
ENGR: DBH	8/29/89
APPR:	

USED ON A3000
NEXT ASSY

Commodore
SCHEMATIC
A3000

SIZE C
313311
REV C
SCALE NONE
SHEET 13 OF 18

PATH: ~/a3000/a3000 exp_1500

Rev.1.38 (03.01.2014)

© rebuild for www.amigawiki.org · for private use only

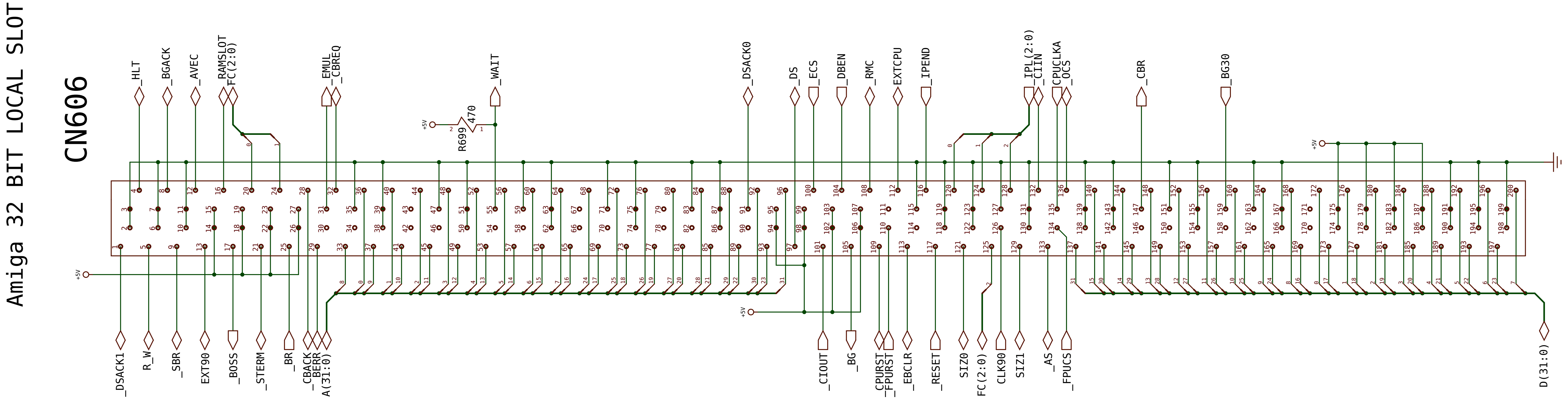
Amiga 32 BIT LOCAL SLOT
CN606
_HLT
_BGACK
_AVEC
RAMSLOT
FC(2:0)
EMUL
_CBREQ
_WAIT
R699
470
+5V
_DSACK0
_DS
_ECS
_DBEN
RMC
EXTCPU
_IPEND
IPL(2:0)
_CIIN
CPUCLKA
_OCS
_CBR
BG30
_DSACK1
R_W
_SBR
EXT90
_BOSS
_STERM
_BR
_CBACK
_BERR
A(31:0)
_CIOUT
_BG
_CPURST
_FPURST
EBCLR
_RESET
SIZ0
FC(2:0)
CLK90
SIZ1
_AS
_FPUCS
D(31:0)

© 1990 COMMODORE BUSINESS MACHINES
Information contained herein is the unpublished, confidential and trade secret property of Commodore Business Machines, Inc. Any use, reproduction or disclosure of this information without the prior written permission of Commodore is strictly prohibited.

C.A.D. Generated
No manual changes may be made to this document

DRAWN BY: DAVE HAYNIE
DATE 8/29/89
CHKD:
ENGR: DBH 8/29/89
APPR:
USED ON A3000
NEXT ASSY

Commodore
SCHEMATIC
A3000
SIZE C
313311
REV C
SCALE NONE
SHEET 15 OF 18
PATH: ~/a3000/a3000 exp_other

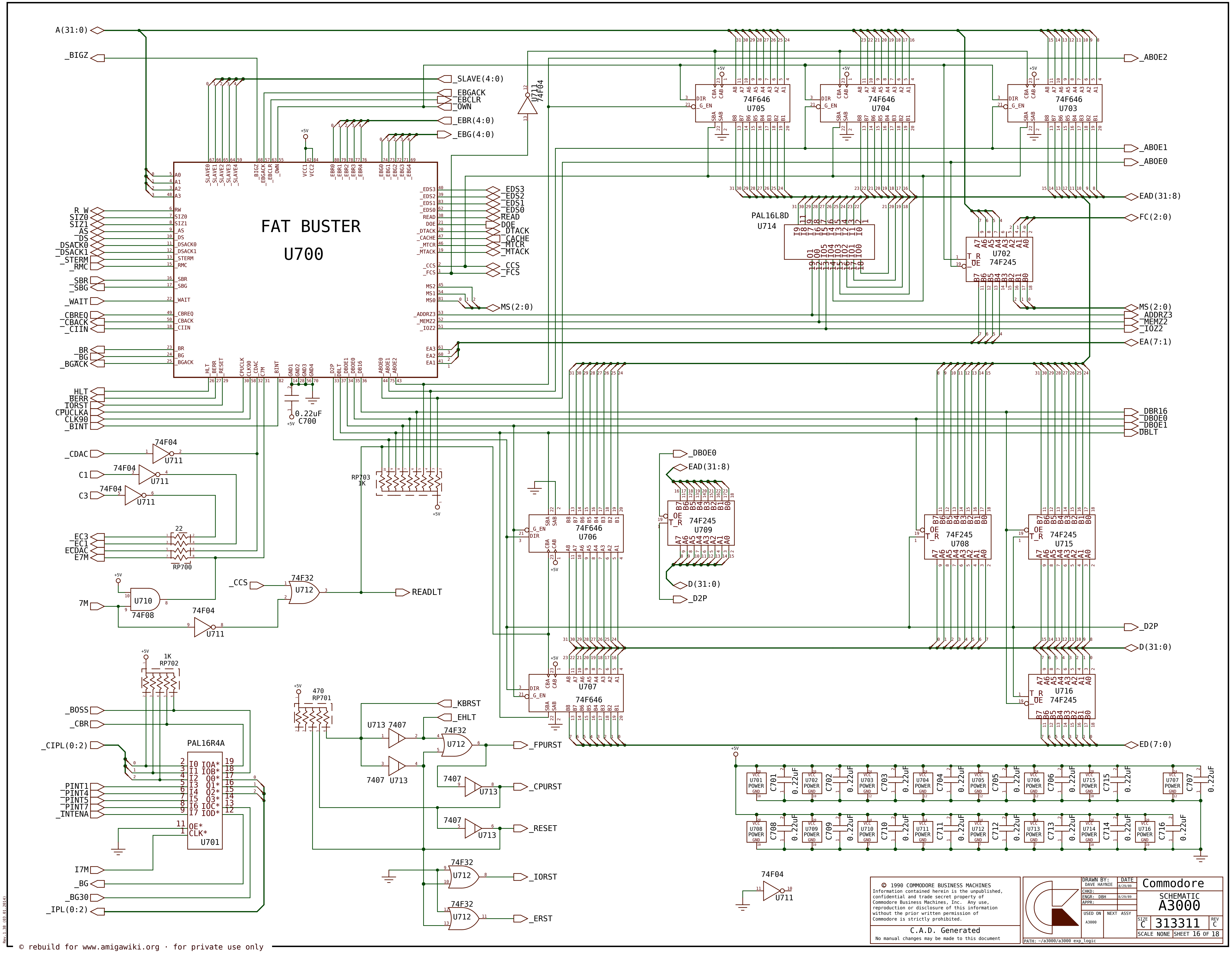
A(31:0)
_BIGZ
_SLAVE(4:0)
EBGACK
_EBCLR
_OWN
_EBR(4:0)
_EBG(4:0)
FAT BUSTER
U700
R_W
SIZ0
SIZ1
_AS
_DS
_DSACK0
_DSACK1
_STERM
_RMC
_SBR
_SBG
_WAIT
_CBREQ
_CBACK
_CIIN
_BR
_BG
_BGACK
HLT
BERR
IORST
CPUCLKA
CLK90
_BINT
_EDS3
_EDS2
_EDS1
_EDS0
READ
DOE
_DTACK
_CACHE
_MTCR
_MTACK
_CCS
_FCS
MS(2:0)
0.22uF
C700
74F04
U711
_CDAC
C1
C3
_EC3
_EC1
ECDAC
E7M
RP700
22
7M
U710
74F08
_CCS
74F32
U712
READLT
RP703
1K
74F646
U705
U704
U703
U706
U707
_ABOE2
_ABOE1
_ABOE0
EAD(31:8)
FC(2:0)
PAL16L8D
U714
U702
74F245
_ADDRZ3
_MEMZ2
_IOZ2
EA(7:1)
_DBR16
_DBOE0
_DBOE1
DBLT
_DBOE0
EAD(31:8)
U709
D(31:0)
_D2P
U708
U715
U716
_D2P
D(31:0)
ED(7:0)
1K
RP702
_BOSS
_CBR
_CIPL(0:2)
PAL16R4A
U701
_PINT1
_PINT4
_PINT5
_PINT7
_INTENA
I7M
_BG
_BG30
_IPL(0:2)
470
RP701
_KBRST
_EHLT
U713 7407
_FPURST
_CPURST
_RESET
_IORST
_ERST
VCC
POWER
GND
+5V

© 1990 COMMODORE BUSINESS MACHINES
Information contained herein is the unpublished,
confidential and trade secret property of
Commodore Business Machines, Inc. Any use,
reproduction or disclosure of this information
without the prior written permission of
Commodore is strictly prohibited.

C.A.D. Generated
No manual changes may be made to this document

DRAWN BY: DAVE HAYNIE | DATE 8/29/89
CHKD:
ENGR: DBH | 8/29/89
APPR:
USED ON A3000
NEXT ASSY

Commodore
SCHEMATIC
A3000

SIZE C | 313311 | REV C
SCALE NONE | SHEET 16 OF 18
PATH: ~/a3000/a3000 exp_logic

Rev.1.38 (03.01.2014)

© rebuild for www.amigawiki.org · for private use only

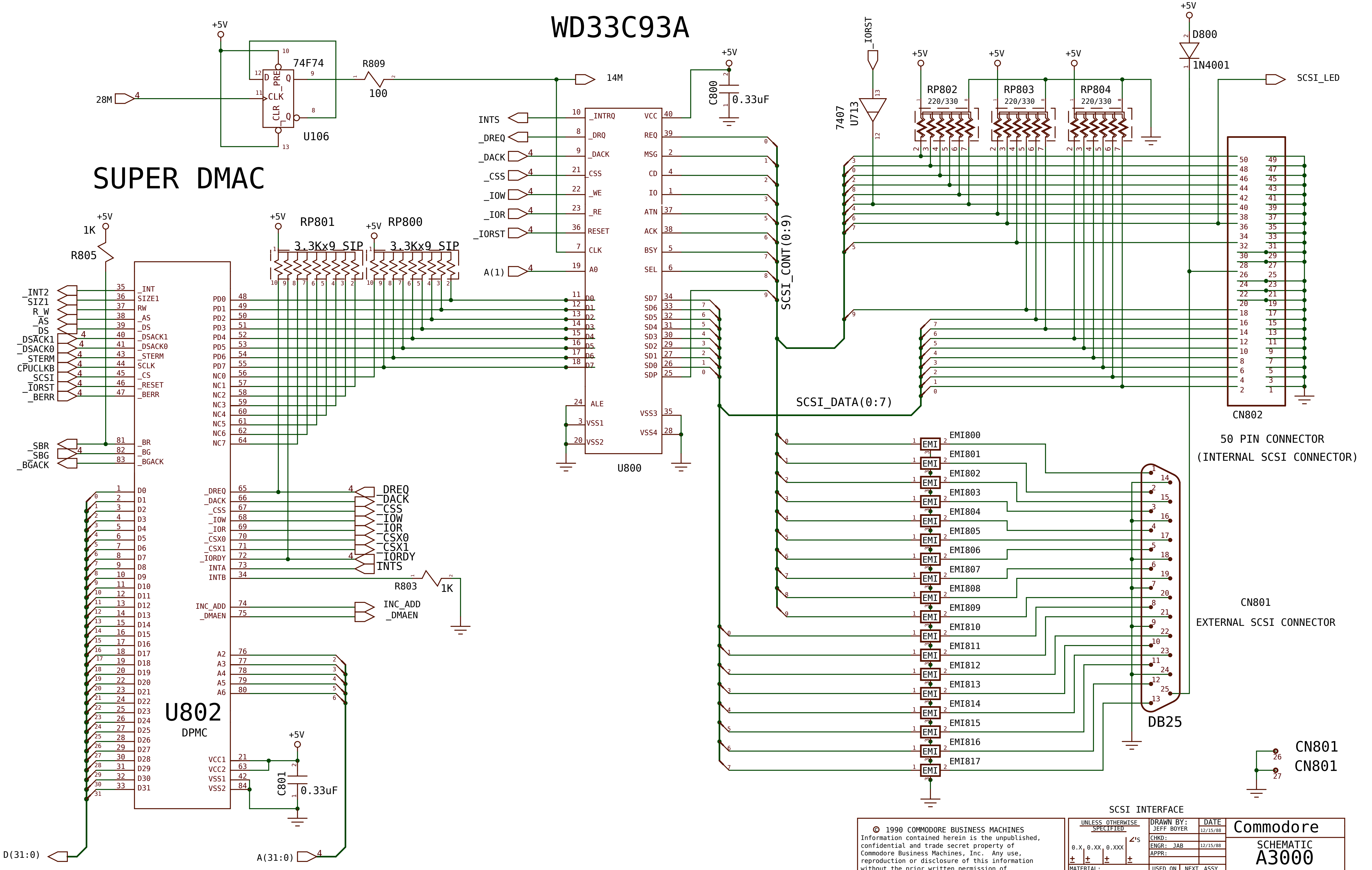
WD33C93A
SUPER DMAC
74F74
U106
R809
100
28M
14M
+5V
C800
0.33uF
U800
_INTRQ
_DRQ
_DACK
_CSS
_WE
_RE
RESET
CLK
A0
ALE
VSS1
VSS2
VCC
REQ
MSG
CD
IO
ATN
ACK
BSY
SEL
SD7
SD6
SD5
SD4
SD3
SD2
SD1
SD0
SDP
VSS3
VSS4
INTS
_DREQ
_DACK
_CSS
_IOW
_IOR
_IORST
A(1)
SCSI_CONT(0:9)
SCSI_DATA(0:7)
_IORST
7407
U713
D800
1N4001
SCSI_LED
RP802
RP803
RP804
220/330
CN802
50 PIN CONNECTOR
(INTERNAL SCSI CONNECTOR)
EMI800
EMI801
EMI802
EMI803
EMI804
EMI805
EMI806
EMI807
EMI808
EMI809
EMI810
EMI811
EMI812
EMI813
EMI814
EMI815
EMI816
EMI817
CN801
EXTERNAL SCSI CONNECTOR
DB25
CN801
CN801
R805
1K
RP801
RP800
3.3Kx9 SIP
U802
DPMC
_INT2
_SIZ1
R_W
_AS
_DS
_DSACK1
_DSACK0
_STERM
CPUCLKB
_SCSI
_IORST
_BERR
_SBR
_SBG
_BGACK
PD0
PD1
PD2
PD3
PD4
PD5
PD6
PD7
NC0
NC1
NC2
NC3
NC4
NC5
NC6
NC7
_DREQ
_DACK
_CSS
_IOW
_IOR
_CSX0
_CSX1
_IORDY
INTA
INTB
INC_ADD
_DMAEN
R803
1K
A2
A3
A4
A5
A6
VCC1
VCC2
VSS1
VSS2
C801
0.33uF
D(31:0)
A(31:0)

SCSI INTERFACE

© 1990 COMMODORE BUSINESS MACHINES
Information contained herein is the unpublished,
confidential and trade secret property of
Commodore Business Machines, Inc. Any use,
reproduction or disclosure of this information
without the prior written permission of
Commodore is strictly prohibited.

C.A.D. Generated
No manual changes may be made to this document

UNLESS OTHERWISE SPECIFIED
0.X 0.XX 0.XXX ∠'s
± ± ± ±
MATERIAL:
FINISH:

DRAWN BY: JEFF BOYER	DATE 12/15/88
CHKD:	
ENGR: JAB	12/15/88
APPR:	

USED ON A3000
NEXT ASSY 313281

Commodore
SCHEMATIC
A3000

SIZE C 313311 REV C
SCALE NONE SHEET 17 OF 18

PATH: ~/a3000/a3000 scsi

Rev.1.38 (03.01.2014)

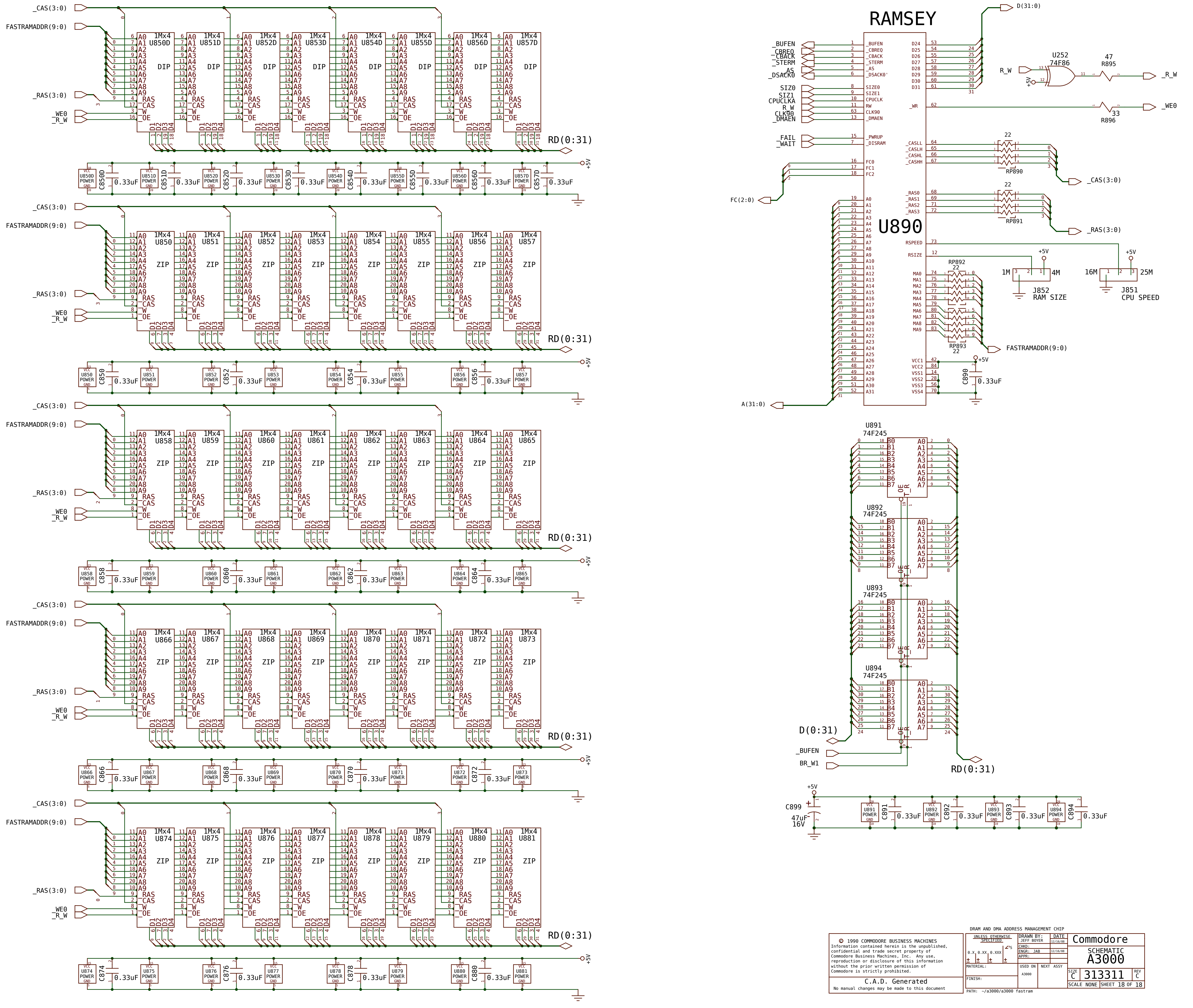
RAMSEY
U890
_CAS(3:0)
FASTRAMADDR(9:0)
_RAS(3:0)
_WE0
_R_W
RD(0:31)
1Mx4
U850D
U851D
U852D
U853D
U854D
U855D
U856D
U857D
DIP
ZIP
U850
U851
U852
U853
U854
U855
U856
U857
U858
U859
U860
U861
U862
U863
U864
U865
U866
U867
U868
U869
U870
U871
U872
U873
U874
U875
U876
U877
U878
U879
U880
U881
A0
A1
A2
A3
A4
A5
A6
A7
A8
A9
RAS
CAS
W
OE
D1
D2
D3
D4
VCC
POWER
GND
0.33uF
+5V
D(31:0)
_BUFEN
_CBREQ
_CBACK
_STERM
_AS
_DSACK0
SIZ0
SIZ1
CPUCLKA
R_W
CLK90
_DMAEN
_FAIL
_WAIT
FC(2:0)
A(31:0)
_PWRUP
_DISRAM
FC0
FC1
FC2
D24
D25
D26
D27
D28
D29
D30
D31
_WR
_CASLL
_CASLH
_CASHL
_CASHH
_RAS0
_RAS1
_RAS2
_RAS3
RSPEED
RSIZE
MA0
MA1
MA2
MA3
MA4
MA5
MA6
MA7
MA8
MA9
VCC1
VCC2
VSS1
VSS2
VSS3
VSS4
U252
74F86
47
R895
33
R896
22
RP890
RP891
RP892
RP893
1M
4M
J852
RAM SIZE
16M
25M
J851
CPU SPEED
C890
U891
U892
U893
U894
74F245
B0
B1
B2
B3
B4
B5
B6
B7
OE
T_R
D(0:31)
BR_W1
C899
47uF
16V
C891
C892
C893
C894

DRAM AND DMA ADDRESS MANAGEMENT CHIP

© 1990 COMMODORE BUSINESS MACHINES
Information contained herein is the unpublished, confidential and trade secret property of Commodore Business Machines, Inc. Any use, reproduction or disclosure of this information without the prior written permission of Commodore is strictly prohibited.

C.A.D. Generated
No manual changes may be made to this document

UNLESS OTHERWISE SPECIFIED
0.X ± 0.XX ± 0.XXX ± ∠'S ±
MATERIAL:
FINISH:

DRAWN BY: JEFF BOYER — DATE 12/16/88
CHKD:
ENGR: JAB — 12/16/88
APPR:
USED ON A3000
NEXT ASSY

Commodore
SCHEMATIC
A3000
SIZE C
313311
REV C
SCALE NONE
SHEET 18 OF 18

PATH: ~/a3000/a3000 fastram

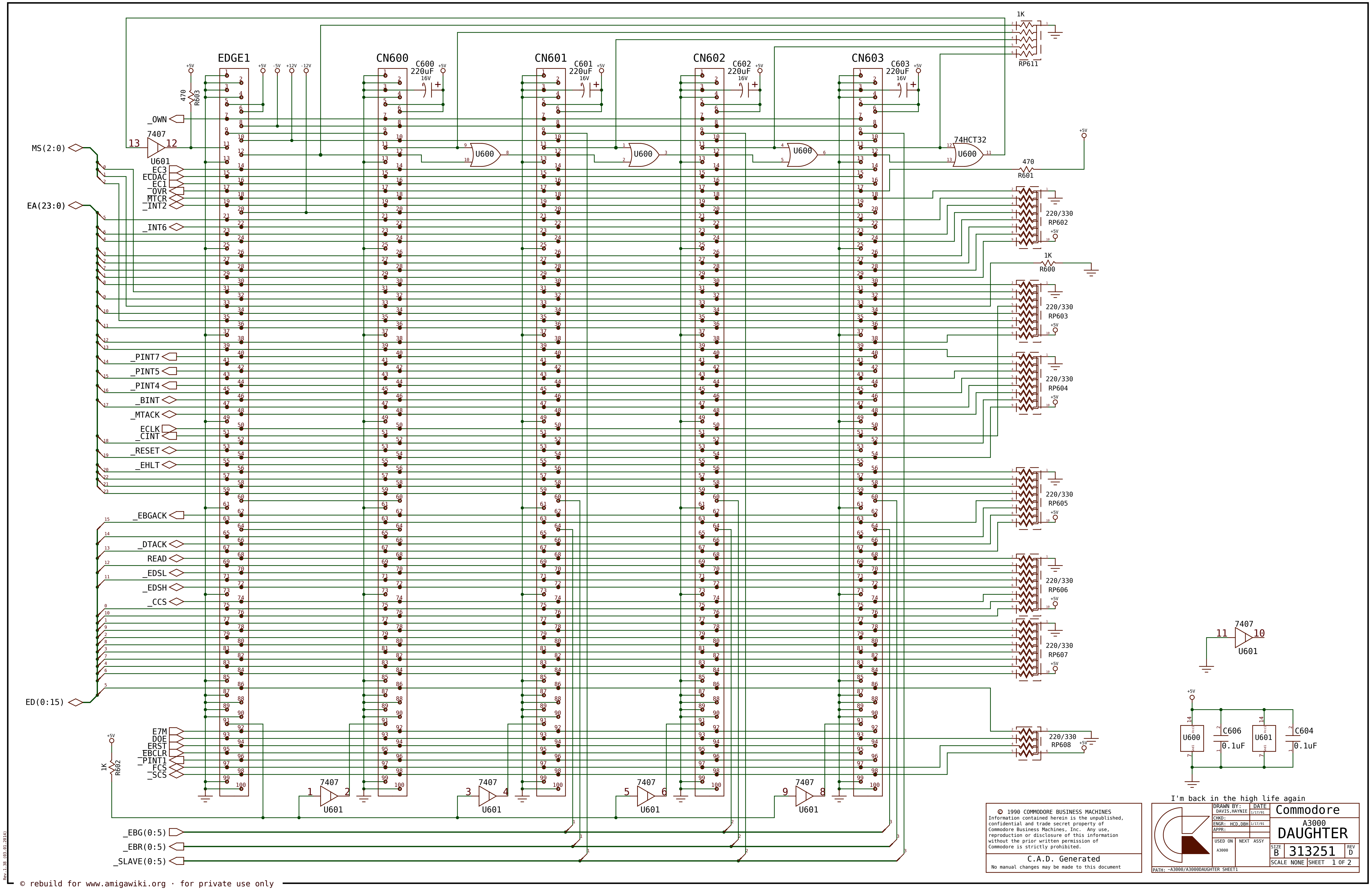
EDGE1
CN600
CN601
CN602
CN603
C600 220uF 16V
C601 220uF 16V
C602 220uF 16V
C603 220uF 16V
+5V
-5V
+12V
-12V
470 R603
_OWN
7407
13
12
U601
MS(2:0)
EC3
ECDAC
EC1
_OVR
_MTCR
_INT2
EA(23:0)
_INT6
_PINT7
_PINT5
_PINT4
_BINT
_MTACK
ECLK
_CINT
_RESET
_EHLT
_EBGACK
_DTACK
READ
_EDSL
_EDSH
_CCS
ED(0:15)
E7M
DOE
ERST
_EBCLR
_PINT1
_FCS
_SCS
1K R602
_EBG(0:5)
_EBR(0:5)
_SLAVE(0:5)
U600
74HCT32
1K
RP611
470
R601
220/330
RP602
1K
R600
RP603
RP604
RP605
RP606
RP607
RP608
11
10
C606
0.1uF
C604
U600
U601
14
7

I'm back in the high life again

© 1990 COMMODORE BUSINESS MACHINES
Information contained herein is the unpublished, confidential and trade secret property of Commodore Business Machines, Inc. Any use, reproduction or disclosure of this information without the prior written permission of Commodore is strictly prohibited.

C.A.D. Generated
No manual changes may be made to this document

DRAWN BY: DAVIS,HAYNIE	DATE 1/17/91
CHKD:	
ENGR: HCD,DBH	1/17/91
APPR:	
USED ON A3000	NEXT ASSY

Commodore
A3000
DAUGHTER

SIZE B | 313251 | REV D
SCALE NONE | SHEET 1 OF 2

PATH: ~A3000/A3000DAUGHTER SHEET1

Rev.1.38 (03.01.2014)

© rebuild for www.amigawiki.org · for private use only

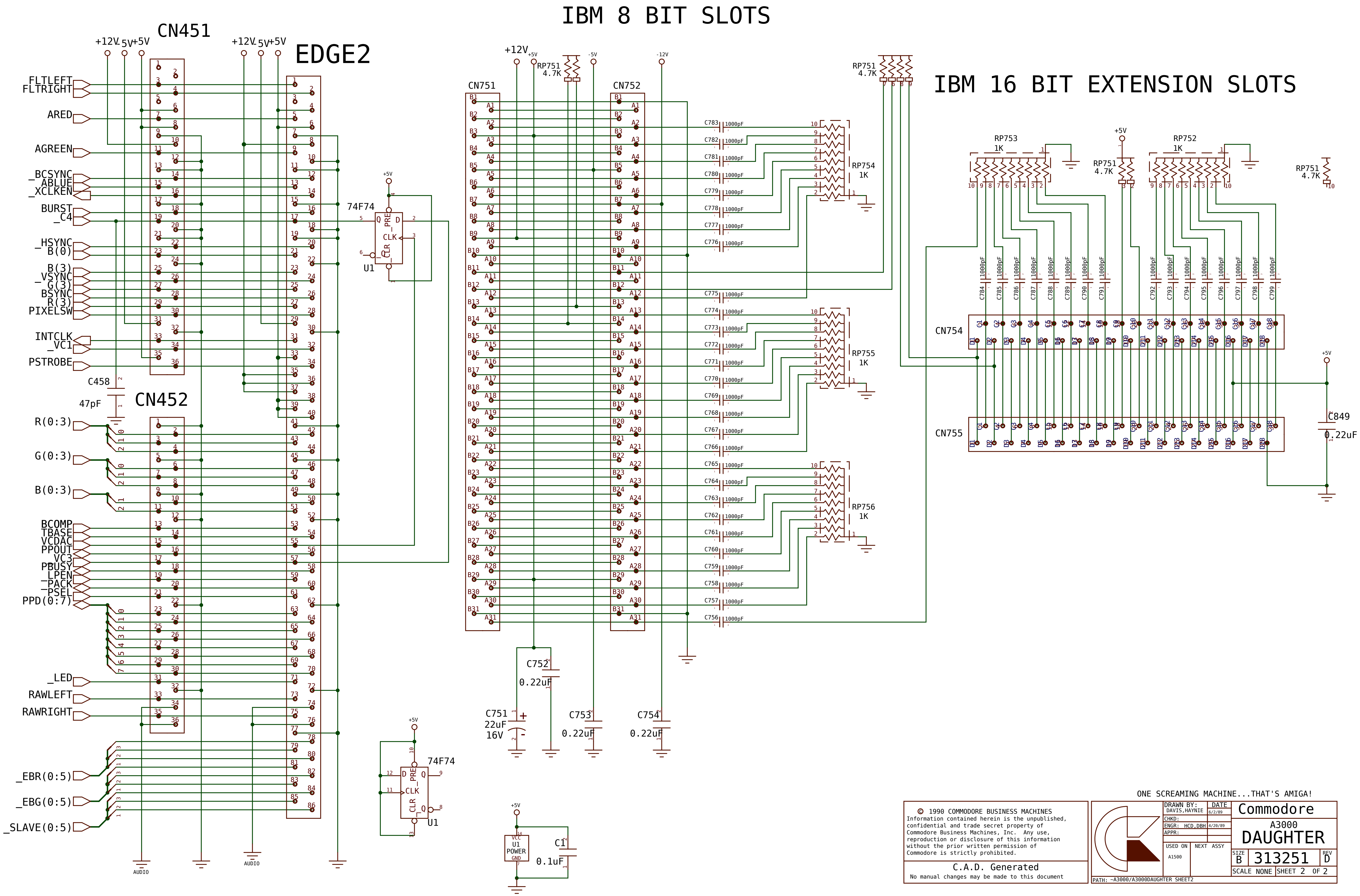
IBM 8 BIT SLOTS
IBM 16 BIT EXTENSION SLOTS
CN451
EDGE2
CN452
CN751
CN752
CN754
CN755
74F74
U1
+12V
-5V
+5V
-12V
FLTLEFT
FLTRIGHT
ARED
AGREEN
_BCSYNC
ABLUE
_XCLKEN
BURST
_C4
_HSYNC
B(0)
B(3)
_VSYNC
G(3)
BSYNC
R(3)
PIXELSW
INTCLK
_VC1
PSTROBE
C458
47pF
R(0:3)
G(0:3)
B(0:3)
BCOMP
TBASE
VCDAC
PPOUT
_VC3
PBUSY
_LPEN
_PACK
_PSEL
PPD(0:7)
_LED
RAWLEFT
RAWRIGHT
_EBR(0:5)
_EBG(0:5)
_SLAVE(0:5)
AUDIO
AUDIO
RP751
4.7K
RP752
1K
RP753
1K
RP754
1K
RP755
1K
RP756
1K
C751
22uF
16V
C752
0.22uF
C753
0.22uF
C754
0.22uF
C849
0.22uF
C1
0.1uF
VCC
U1
POWER
GND
PRE
CLR
CLK
D
Q
1000pF

ONE SCREAMING MACHINE...THAT'S AMIGA!

© 1990 COMMODORE BUSINESS MACHINES
Information contained herein is the unpublished,
confidential and trade secret property of
Commodore Business Machines, Inc. Any use,
reproduction or disclosure of this information
without the prior written permission of
Commodore is strictly prohibited.

C.A.D. Generated
No manual changes may be made to this document

DRAWN BY: DAVIS,HAYNIE	DATE 6/2/89
CHKD:	
ENGR: HCD,DBH	4/20/89
APPR:	
USED ON A1500	NEXT ASSY

Commodore
A3000
DAUGHTER

SIZE B 313251 REV D
SCALE NONE SHEET 2 OF 2
PATH: ~A3000/A3000DAUGHTER SHEET2

Rev.1.38 (03.01.2014)