REMOTELY CONTROLLABLE HEAT SPOT TESTING MACHINE

Deaven Rivaldi [1], Sofyan [2]
Automotive & Robotics Engineering
BINUS ASO School of Engineering
Jl. Alam Sutera Boulevard No. 1, Alam Sutera, Serpong, Pakulonan, Tangerang
antonius.rivaldi@binus.ac.id [1], sofyan@binus.edu [2]

Abstract - Heat testing at a specific point on a tested object is conducted using an infrared lamp inside a heating chamber with a temperature capable of reaching 100°C. However, the lamp's positioning is currently manually adjusted by humans, thus a device that can remotely control the lamp's position from outside the heating chamber is necessary. The objective of this project is to design and create a frame and a remote-control system that can support the weight of the lamps, move the lamps in two axes, and operate at temperatures up to 100°C. The created device is then tested for load capacity, temperature resistance, distance, and speed in each movement direction. The results obtained show that the device can be remotely controlled and consistently reaches the designated distance target when operating within the temperature range of -30°C to 100°C with a load capacity up to 3kg. The achieved speed is approximately 95-100% of the set speed, with a maximum speed of 50mm/s.

Keywords - heat resistance test, specific point test, remote-control system, two axes linear motion

I. INTRODUCTION

In this modern era, the industrial sectors have various regulations and quality requirements for a product to be commercialized. One of the quality requirements that needs to be fulfilled is to carry out quality control on the product at a special institution that can conduct tests on those products. There are many types of quality control methods and different industrial sectors will require different methods for their product. One of those methods is the heat resistance testing at a specific point or heat spot testing for short.

Heat spot testing is conducted using a heating chamber of size $1x1x1m^3$ to $3x3x3m^3$ with temperature ranging from -30°C to 100°C [1]. Inside the heating chamber there is a stand that is used to hang infrared lamps. These lamps are used to further raise the temperature at a specific point on the object with temperature ranging from 20 to 50°C, depending on the lamp's distance to the object [2].

Currently the positioning of the lamps on the stand is still done manually by human operators by entering the chamber. This activity will prolong the testing time and waste energy because every time the chamber is opened, the ongoing test must be paused, and it will need extra time and energy to recover the temperature according to the test requirements. Entering the chamber in this

situation will also endanger the operators as they will be exposed to high temperatures inside the chamber.

Therefore, this project aims to solve this problem by creating a machine to help the operator position the lamps without needing to enter the heating chamber. The machine created must be able to withstand the temperatures inside the chamber, withstand the lamps' weight, and can be remotely controlled.

II. FRAME DESIGN

Before the machine was created physically, the design of the machine was initially made using the 3D-design software Autodesk Inventor. The design result is as follows.

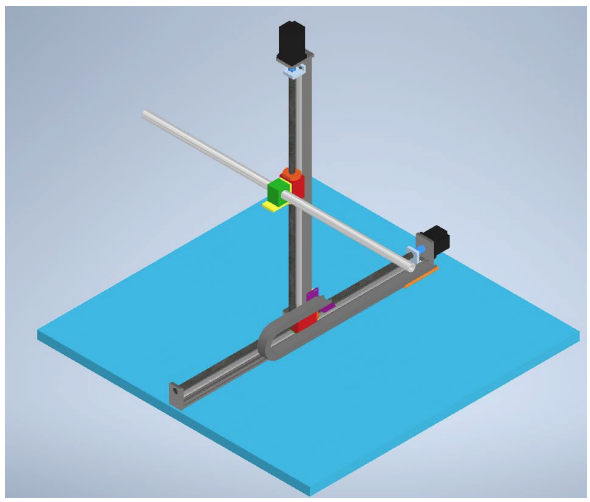

Fig. 1 3D Design of Machine Frame

The machine is designed using the two axes linear motion concept for its movement, thus the main components used are two linear guide rails, one for the horizontal axis and another for the vertical axis. In the design, the vertical axis components resemble the cross, where the horizontal part is a rod used to hold the infrared lamps. The horizontal rail is bolted into a flat base to lock its position and hold the whole system from moving around or falling during operation.

Each component was also assigned to a specific material. As mentioned previously, the materials chosen must be able to withstand the chamber's temperature and the lamp's weight. Especially for the moving parts, the material chosen must have anti-rust characteristics so to maintain its performance. The materials assignments are as follows.

Table 1 Materials Allocation

Part name	Material	Weight
Base	Iron	106 kg
Linear guide rail	Steel, aluminum	10 kg
Guide rail connector	Steel	0.29 kg
Lamp rod holder	Iron	1.72 kg
Lamp rod	Steel	0.467 kg

III. CONTROLLER DESIGN

After the design of the machine's frame was made, the design of the machine's control system was also created. As mentioned previously, the machine's frame must be able to move in two axes. And since the machine uses the linear motion concept for its movement, the common type of actuator to use is the stepper motor. Thus, the controller design for this project will revolve around the stepper motor. Stepper motor requires several other supporting components to be able to operate, they are the stepper motor driver, motion controller, and cables. Below is a table showing the components used for the machine's control system.

Table 2 Controller Components

Component	Type	Quantity
Stepper motor	NEMA-23, hybrid, bipolar	2
Stepper motor driver	FLS40	2
Motion controller	FMC4030	1
Power supply	DC, 3 port	1
Dupont cable	AWG24, M-M	±24
Ethernet cable (RJ45)		
Power cable	3-phase	1

There are some important things to note during the selection process for the controller components. First, the stepper motor used on the vertical rail will have to hold the weights in static condition, even when the motor is not operating. To help achieve this, the stepper motor on the vertical rail will have a braking system so that when there is no electricity flowing into the motor or the motor is not operating, the brakes will hold the motor's shaft, preventing it from rotating because of the weights.

Second, all the components mentioned in the table above will be placed outside the heating chamber except for both stepper motors and the cables that connect the stepper motor with the driver. This means that both stepper motors and the cables chosen must be able to endure the high and low temperature inside the heating chamber during its operation. Most stepper motors can operate normally in temperatures up to 100°C and since the heating chamber's highest temperature is also 100°C, the stepper motor is still a safe choice for this project. The cable chosen is the AWG24 Dupont cable. This type of cable is commonly used for a stepper motor, it usually has a pre-built adaptor for stepper motor and can withstand heat up to 200°C, thus it is also a safe choice for this project.

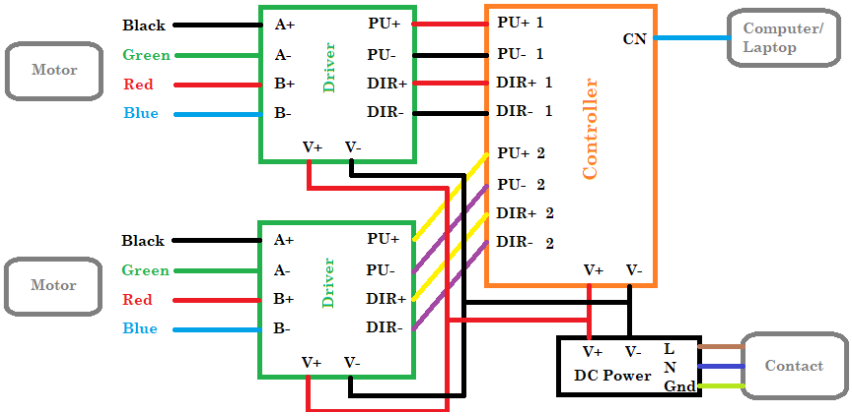

Fig. 2 Controller

The figure above shows the wiring diagram for the control system of the machine. Each stepper motor is connected to their own driver to allow them to operate separately. Both drivers are then connected to the motion controller. The motion controller is the "brain" that will give signals to move the motors. The motion controller itself has in-built software so it must be connected to a computer or laptop via the ethernet connection to be able to use it. Both drivers and the motion controller must be connected to the DC power supply to be able to operate.

IV. FRAME ANALYSIS USING FEM

Before the machine was manufactured in real life, analysis of the machine's frame was conducted using the finite element method (FEM). FEM is a numerical calculation technique that splits a structure into smaller elements and performs algebraic calculations on those elements for analysis. There are many types of analysis that can be done using the FEM, but for this project there are 2 types of analysis that will be conducted, stress and temperature analysis [3].

I. Stress Analysis

Stress analysis of the frame was done using the stress analysis feature on Autodesk Inventor software. There are 2 points on the machine's frame that will be tested against stress. The first point is the guide rail connector that connects the vertical guide rail with the lamp rod holder. At this point, the guide rail connector must withstand the weight of lamps, lamp rod, and lamp rod holder. The second point is the slider on the horizontal guide rail. At this point, the slider must withstand the weight of the whole vertical components.

The total force acting at the first point is approximately 40N, whereas the total force acting at the second point is approximately 151N. They are results from the total weight acting at that point multiplied by the gravitational acceleration, which is $10 m/s^2$. For safety measures, the force used during the analysis is 2.5x the actual force, so at the first point the acting force would be 100N and at the second point it would be 380N.

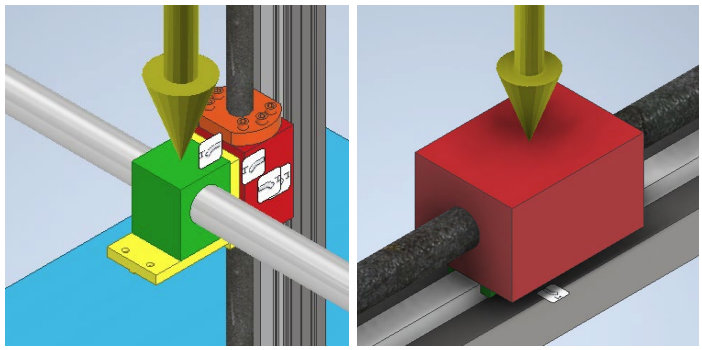

Fig. 3 Stress Analysis Points

II. Temperature Analysis

After conducting stress analysis, temperature analysis was done using the fluid flow feature on ANSYS Workbench software. Temperature analysis was done on each component separately and the simulation was made to be as close as possible to the real situation when the machine is put inside the heating chamber.

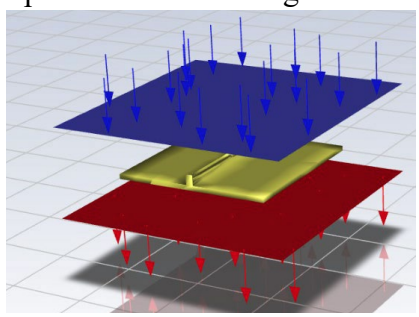

Fig. 4 Temperature Analysis Simulation

When the heating chamber is operating, hot air is blown into the chamber's room from the ceiling. On the floor of the chamber's room there is an exhaust hole that sucks the air inside and blows it outside the chamber for cooling process. To help maintain the temperature inside the heating chamber, cold air will also be blown into the chamber's room from the floor in a certain time span. In real practice, the temperature inside the heating chamber will only reach 100°C. However, for safety measures, the temperature used during the analysis is 126.85°C (400K) which is 25% higher than the actual condition.

V. FEM RESULTS AND ANALYSIS

A. *Stress Test Result*

As mentioned previously, stress analysis was performed at two points on the machine's frame. The following is the result of stress analysis performed at the first point, which is the guide rail connector that connects vertical guide rail and the lamp rod holder.

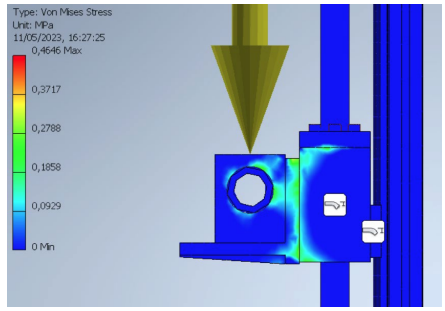

Fig. 5 Stress Analysis Result at Guide Rail Connector

From the figure above it can be seen that the weights on the guide rail connector build up stress with magnitude of 0.0929 MPa to 0.1858 MPa at the side part of the connector which is connected to the slider of the vertical guide rail, rather than the bottom part of the connector which holds the weights. From further literature study, it is found that the reason stress was built up at the side part of the connector is because there is an offset between the center of mass of the weights and the vertical guide rail, which caused torque at the vertical guide rail [4]. The offset is approximately 0.074 m.

If the vertical guide rail is assumed to be a vertical beam, then the torque caused by the hanging weights will also affect the bottom of the vertical beam, which in this case is the slider on the horizontal guide rail, with the same magnitude [4]. Thus, a new analysis was done to the slider on the horizontal guide rail and the result is as follows.

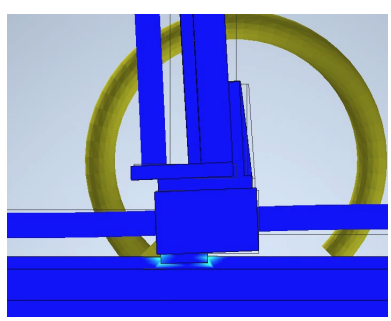

Fig. 6 Torque Analysis Result at Horizontal Guide Rail Slider

From the figure above it can be seen that the torque acting on the horizontal guide rail's slider builds up stress with magnitude of 0.00723 MPa to 0.03615 MPa on the left and right side of the slider. The slider itself is composed of two parts, the smaller lower part that grips the rail, and the bigger upper part that carries the weight. Because torque causes a circular motion, then the torque acting on the slider will cause one side of the slider to be pulled up from the rail, while the other side is pressed down.

The analysis performed at the second point, which is the slider on the horizontal guide rail gives a similar result with the torque analysis, however the stress this time is caused by weight force acting on the slider. The result is as follows.

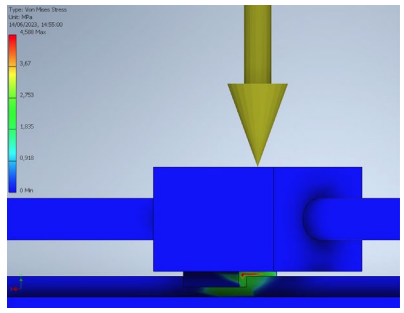

Fig. 7 Stress Analysis Result at Horizontal Guide Rail Slider

From the figure above it can be seen that the weights acting on the slider also build up stress with magnitude of 1.835 MPa to 4.588 MPa on the side of the lower slider but only on one side. This is because the lower slider is positioned a little further to the left, whereas the center of mass of the weights is exactly at the center of the upper slider. Therefore, stress on the lower slider is only built up on the side that is closer to the center of the upper slider.

All the results from the stress analysis show that the stresses caused by the weights did not exceed the materials capability, thus it is proven that the designed frame should be able to withstand the real weight acting on the machine without any deformation or deflection.

B. Temperature Test Result

The next analysis performed on the machine's frame was the temperature analysis. As mentioned previously, temperature analysis was done separately on each component using the same environment as the heating chamber with a temperature of 126.85°C. since the temperature inside the heating chamber is kept constant, all the simulation resulted in a uniformly heat distribution of 126.85°C across the whole component's body. This is because there is no temperature difference between the component's body and its surrounding environment, thus no heat energy could be dissipated. All the results also showed that there is no deformation or deflection of the components, therefore it is safe to say that the designed frame should also be able to withstand the real temperature of the heating chamber during operation.

VI. REAL LIFE TESTING

After getting a satisfactory result from the stress and temperature analysis on the machine's frame using FEM, the machine is manufactured and assembled physically. This is the visualization of the machine in real life after assembly.

Fig. 8 Heat Spot Testing Machine in Real Life

Table 3 Machine Specification

Parameters	Value
Overall dimension	970 x 960 x 926 mm^3
Weight	±125 kg
Lamp rod length	900 mm
Number of axes of movement	2
Range of movement	700 mm (horizontal), 650 mm (vertical)
Input power	115Vac / 6.8A (782 watt)
Output power	24V / 14.6A (350.4 watt)
Maximum speed	50 mm/s

Before being officially used, the machine must also undergo a series of real-life testing to evaluate its performance and make sure that it is safe and ready to be used. This time the machine will be tested for weight, temperature, and movement. The three parameters will be tested simultaneously with the following procedures: There will be 5 weight variances used to conduct the weight test. These weights come from a total of 4 infrared lamps and an extra 1kg weight. Each weight test will also be conducted at five different temperatures inside the heating chamber. The temperature ranges from -30°C (the lowest temperature) to 100°C (the highest temperature). For each weight and temperature variance, the machine will move in each direction (up, down, forward, and backward) and data will be collected separately for each direction. For each direction the machine will also move in three different speed variances ranging from 10 mm/s to 50 mm/s, so there will be a slow speed, medium speed, and high speed. Thus, for each direction, the machine will be tested a total of 75 times.

During each test, the machine will be set to move 325 mm on the horizontal axis and 195 mm on the vertical axis. The data taken is the time required by the machine to reach the specified distance target from its static condition. Below is a visualization of the machine's testing setup.

Fig. 9 Real Life Testing Setup

VII. REAL LIFE TEST RESULTS AND ANALYSIS

A. Weight Test Result

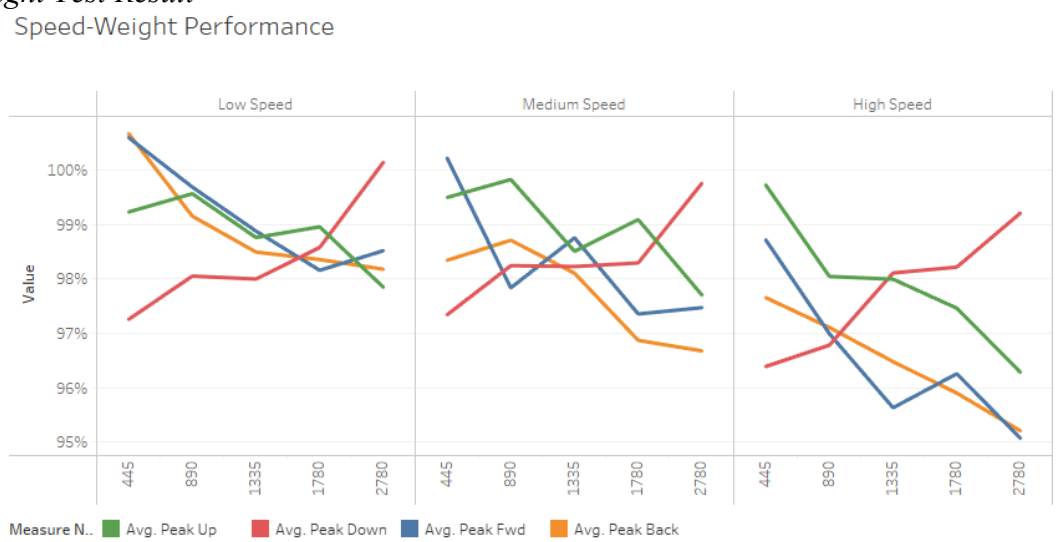

Fig. 10 Weight to Speed Test Result

As mentioned previously, the real-life testing for the heat spot testing machine was conducted for three parameters simultaneously. They are weight, temperature, and movement. This first part will analyze the effect of various weights on the machine's performance. To do this, the effect from temperature will be neglected, and the average from all five temperature variances is taken. The graph shown in figure 9 shows the percentage of the achieved speed performance for the three speed variances, and each colored line represents the direction of movement.

The result acquired is that the set distance target is always achieved with an overall achieved speed percentage between 95% to 101%. From the three speed variances, it is seen that as the weight increases, the achieved speed percentage will slightly decrease, meaning that the movement speed becomes slower, except for the downward movement, where the achieved speed percentage increase as the weight increases.

Aside from the speed result, while observing the machine during testing, it was seen that when the machine is moving while carrying a load, starting from a single lamp, the vertical rail will swing a little especially when it is moving horizontally. As the load increases, the swing will worsen. However, while still within the boundaries set for the testing process, the machine can still move the loads just fine. The machine's set speed also affects the swing of the vertical rail, in which higher set speed will worsen the swing of the vertical rail, but on lower set speed the vertical rail can maintain its stability better while moving.

B. Temperature Test Result

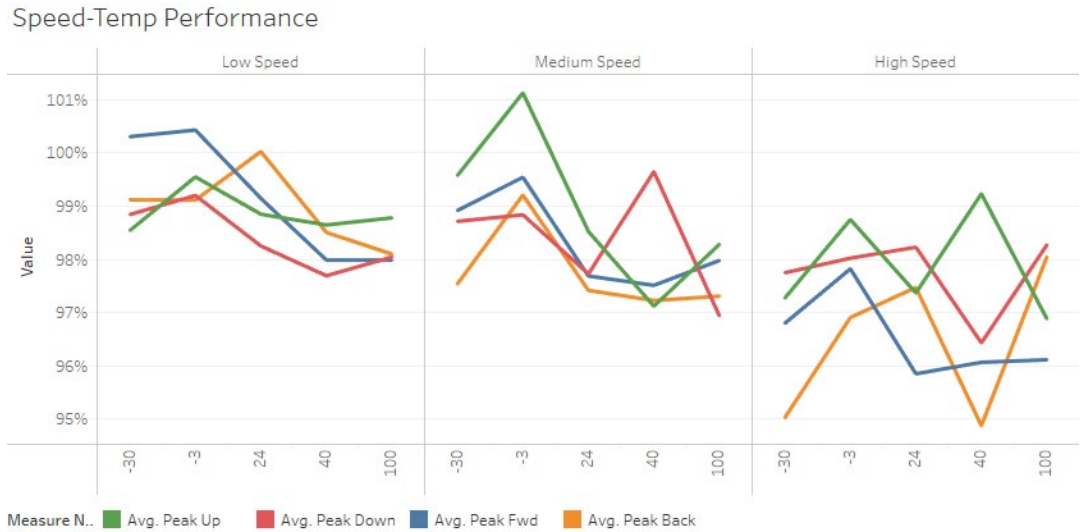

Fig. 11 Temperature to Speed Test Result

The next part will analyze the effect of various temperatures on the machine's performance. Like the previous analysis, in this part the effect from weight will be neglected, and the average from all five weight variances is taken. The graph shown in figure 10 shows the percentage of the achieved speed performance for the three speed variances, and the colored line represents the direction of movement, just the same as figure 9 before.

The result acquired is that the set distance target is always achieved with an overall achieved speed percentage between 95% to 102%. From the three speed variances, it is seen that as the temperature increases, the achieved speed percentage tends to be lower, meaning that the movement speed becomes slower. However, for the three most important temperatures, which are the lowest (-30°C), room (24°C) and the highest temperature (100°C), the achieved speed doesn't differ that much, but they tend to fluctuate in the middle temperature, which are -3°C and 40°C.

C. *Weight, Temperature and Movement Relationship*

The last part will analyze the effect from both weight and temperature on the machine's performance. This time the effect from speed variance will be neglected, and the average from all three speed variances is taken. The graphs below will show the percentage of the achieved speed performance for each movement direction.

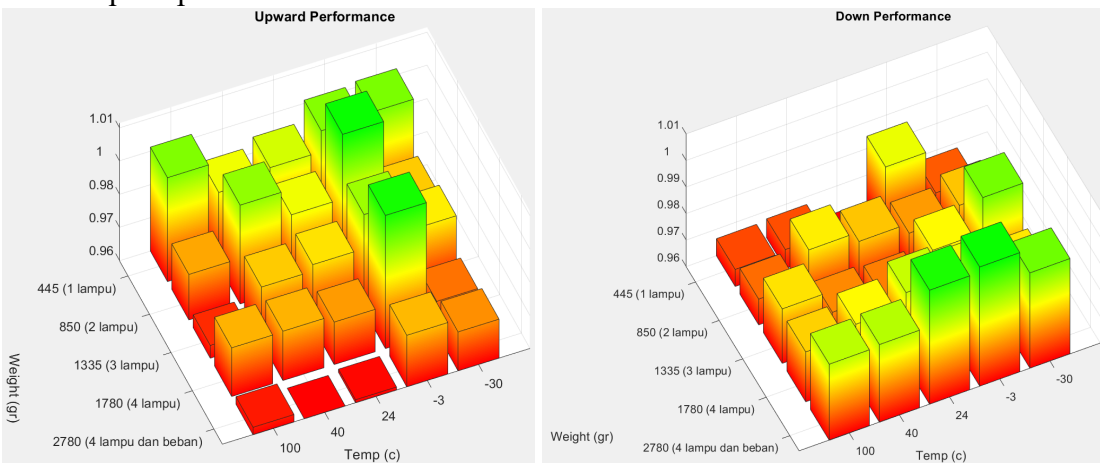

Fig. 12 Weight, Temperature, Movement on Vertical Movement

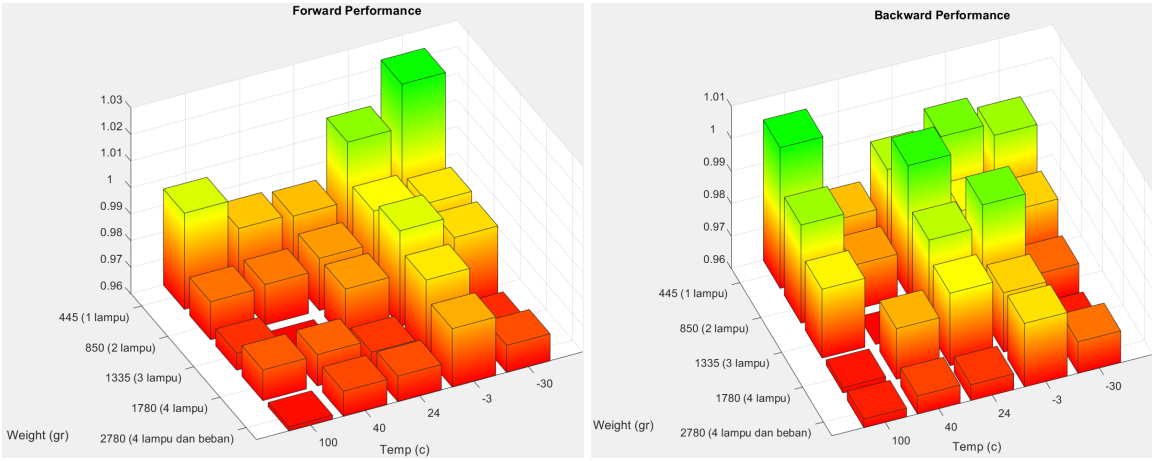

Fig. 13 Weight, Temperature, Movement on Horizontal Movement

On the graph, the horizontal axes represent the value of weight and temperature, while the vertical axis represents the percentage of achieved speed. The color of each bar ranges from red-yellow-green. Red means lower percentage while green means higher percentage. From all four graphs some similarities can be seen, which are the color of bars tend to be greener on lighter weight (back row) and turns red as the weight increases (front row). This excludes the downward movement where the bars tend to be redder on lighter weight (back row) and turns green as the weight increases (front row). These results conform to the analysis from part A, where the achieved speed tends to be slower as the weight increases.

On each row, all five bars tend to have the same color tone. For example, on the back row, most of the bars are colored green, yellow-green, and yellow, while on the front row, most of the bars are colored red and orange. These results also conform to the analysis from

part B, where the achieved speed tends to be stable across all temperature variances, although there tend to be some fluctuations.

Overall, the machine's achieved speed percentage in all directions is between 95% to 103%. The achieved speed percentage above 100% means that the actual motor speed during operation exceeds that of the set speed. However, considering that all the measurements taken during the test were done manually, and there is a big probability for human error, these results can still be considered satisfactory. It is more important to note that the machine successfully achieved its set distance target consistently under all the testing environments, while still maintaining good stability and motor performance.

VIII. CONCLUSION

From the entire series of manufacturing and testing that has been carried out on the heat spot testing machine in this project, it can be concluded that the machine built in this project has achieved its objective in which the machine can be remotely controlled from outside the heating chamber to position the infrared lamps used during the heat spot testing. The machine can also withstand the weights from all the lamps used, perform well at the heating chamber's temperature ranging from -30°C to 100°C and can carry weight up to ±3kg. During operation the machine can always achieve its set distance target and carry weights with speeds up to 50mm/s with good stability.

IX. REFERENCES

[1] *DAMP-heat chamber*. THP Systems. (2019, February 14). Retrieved February 27, 2023, from https://www.thp-systems.com/test-systems/damp-heat-chamber/

[2] *Reptizoo neodymium daylight heat spot lamps*. Reptilemart.ca. (n.d.). Retrieved February 27, 2023, from https://reptilemart-ca.myshopify.com/products/reptizoo

[3] Brush, K. (2019, November 27). *Finite Element Analysis (FEA)*. Software Quality. https://www.techtarget.com/searchsoftwarequality/definition/finite-element-analysis-FEA

[4] Beer, F. P., Johnston Jr., R. E., DeWolf, J. T., & Mazurek, D. F. (2011). *Statistics and mechanics of materials* (1st ed.). McGraw-Hill.