RRB PO CLERK 2025

English

REASONING RANK FILE

Pre + Mains

आपके Daily Practice का साथी

Daily Target PDF

For All Bank & Insurance Exams

Date

07 – Jan – 2026

Topic

RRB Clerk Mains

BY SAURAV SINGH

CHAMPION'S REASONING 3.0

THIS BOOK INCLUDES

- Crystal clear conceptual Explanation.
- Questions are Bifurcated as per Subtopics.
- Question Division-Prelims Level/Clerk Mains/PO Mains
- Basic to Advance level questions with detailed solutions.
- Strategy & tips for Bank exam preparation.
- Trend Analysis of Questions & Cut-off.
- Out of the Box Questions.

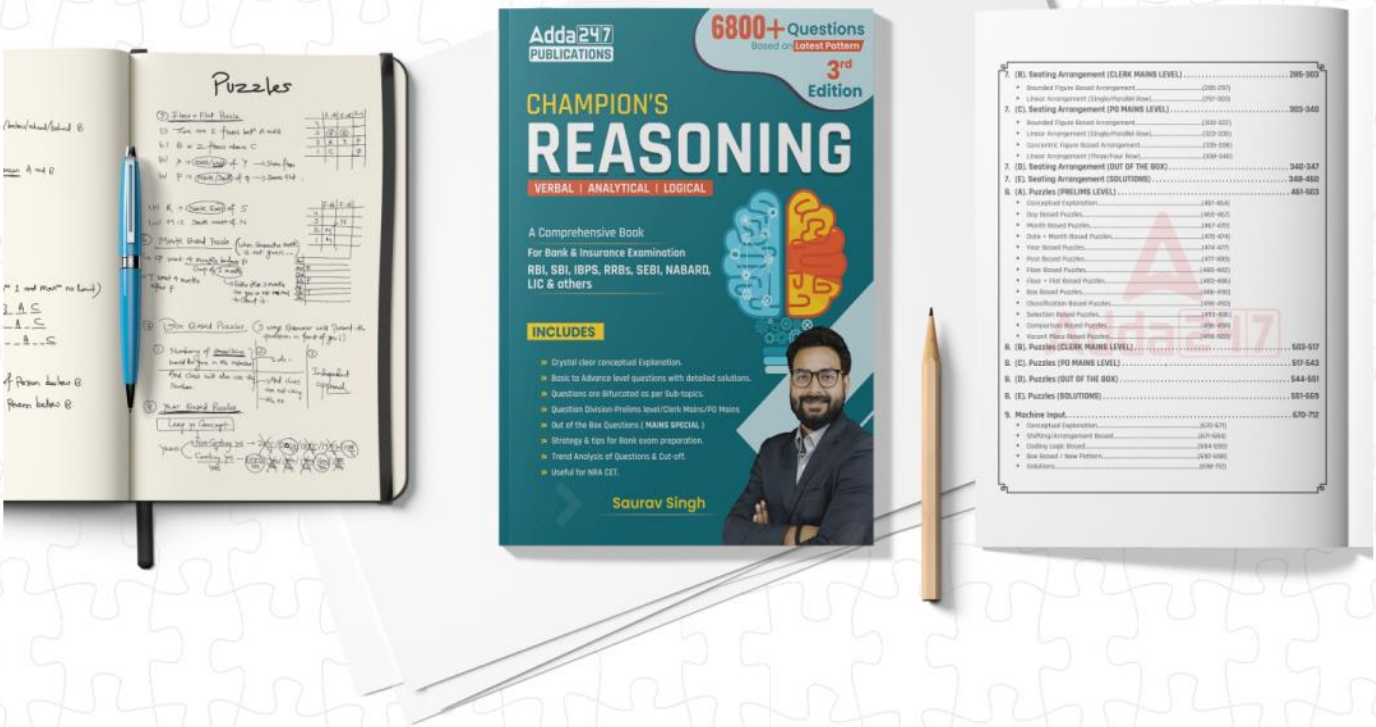

This Book Is Helpful For Both **Prelims** As Well As Your **Mains** Exam Preparation.

To Grab Your Copy
Scan The QR Code

Download The App Now!!!
GET IT ON Google Play
Download on the App Store

Use Code
Y188
For **maximum** Discount

CHAMPIONS

REASONING

YOUTUBE CHANNEL

DON'T FORGET **TO LIKE, SHARE AND SUBSCRIBE**

SUBSCRIBE NOW

A MESSAGE TO STUDENTS

Champions! The Most Crucial Months Are Here…
The upcoming months are going to decide the future of every banking aspirant. With **IBPS Clerk & SBI Clerk (Prelims & Mains) both the phases, IBPS/SBI PO (Mains) phase and of course other major bank exams** are also lined up, this is the time to give your **best shot**.

And we know that, Practice is the bridge between preparation and success.
It is not enough to just learn concepts—you must repeatedly apply them under pressure. Every practice session builds your **speed, accuracy, and presence of mind**, while also reducing exam-day anxiety. Just like a player sharpens skills through daily training before the big match, a banking aspirant must sharpen reasoning, quant, and English through **relentless and structured practice**. The more you practice, the more familiar patterns become, and the more confident you feel when facing new challenges in the exam hall.
Remember: –
📌 *Knowledge* can get you started, but only **consistent practice** turns you into a real achiever.
📌 Practice is not just solving questions, it's about building **speed, accuracy, and confidence**.
📌 Every hour of smart practice today becomes a **step closer to your selection** tomorrow.

And to make your practice even more result-oriented, I'm introducing three powerful add-ons in your updated Rank File:
1️⃣ **Time-Based Miscellaneous Bundled Set –** Carefully designed mixed-topic sets with a timer to replicate real exam pressure, training you to think fast and act smart.
2️⃣ **Timer in Seating + Puzzle File –** Every seating arrangement and puzzle now comes with a built-in timer, ensuring you sharpen your speed, accuracy, and decision-making just like in the actual exam.
3️⃣ **3 Days Mains Files –** Special mains-oriented practice files every 3 days to help you cope with the upcoming PO Mains exam with consistency and confidence.

🎯 Champions, this is not just an update, it's your **weapon to beat the cut-off and secure your seat**. Now it's your turn—make every practice count! 🚀

All The Best Champions
Blessings

FOR RBI, SBI, IBPS, LIC, NABARD & OTHER BANK/INSURANCE EXAMS
SUBSCRIBE Champion's Reasoning YouTube Channel

Directions (1-5): Read the following information's carefully and answer the questions given below

In a certain code language

Launched code farm house" is coded as "C21B B15P C21P A18B".

First logical national gaming" is coded as "C15P B14B A20J D20B"

Team celebrate second victory" is coded as "D20F B19F B25J B20F".

Famous biscuits present there" is coded as "C21B C21J B20S B18I"

1. **What is the code for 'Amplitude'?**
   (a) D21L (b) C21U
   (c) C25T (d) D21N
   (e) None of the above
2. **What is the code for 'Clothes'?**
   (a) L25K (b) M25N
   (c) S20M (d) M20S
   (e) B20M
3. **What is the code for 'Renown'?**
   (a) C23X (b) B23F
   (c) D23E (d) A23F
   (e) None of the above
4. **What is the code for 'win games'?**
   (a) A23J B19X (b) A23T C19B
   (c) A23J B19B (d) A23T D19B
   (e) None of the above
5. **What is the code for 'Larynx'?**
   (a) C25B (b) D25S
   (c) E25B (d) A25B
   (e) None of the above

Directions (6-10): Read the following information's carefully and answer the questions given below.

16 persons are sitting in three parallel rows such that 4 persons sit in row 1, 8 persons sit in row 2 and 4 persons sit in row 3. The first four persons from left end are facing north in row 2 and remaining four face south. Persons in row 1 face south while persons in row 3 face north. Persons in row 1 sit opposite to the first four persons of row 2 and persons in row 3 sit opposite to remaining four persons of row 2.

Note: In row 2, to distinguish between the left and right ends of the row, consider it with respect to north direction.

L and K face in same direction. T sits opposite to W. O is sitting adjacent to Z. W sits second to the left of O. Z and M are immediate right of each other. X sits immediate left of N, who sits opposite to P, who sits immediate left of Q. X is not in row 2. Neither X nor N sit at any extreme end. V sits immediate right of U. V and R face in same direction. R and V are not in same row. S and K are opposite to each other. L sits to the right of Y. K is not facing south direction.

6. **Who among the following sits second to the left of M?**
   (a) T (b) U
   (c) V (d) P
   (e) None of the above
7. **How many persons sit to the left of Z in the same row?**
   (a) Two (b) Three
   (c) Six (d) Four
   (e) One
8. **Which of the following statement is correct?**
   (a) X faces south
   (b) T sits at one of the extreme ends
   (c) S sits second to the right of V
   (d) R faces N
   (e) All are correct
9. **Find the odd one out.**
   (a) L (b) R
   (c) K (d) W
   (e) T
10. **Who sits second to the left of L?**
   (a) X
   (b) One, who sits opposite to P
   (c) One, who faces south
   (d) One, who sits adjacent to V
   (e) None of the above

Directions (11-15): Read the following information's carefully and answer the questions given below

Seven players Russel, Dhoni, Sachin, Rahul, Rohit, Pandya and Gayle hit different number of sixes among 18, 19, 21, 25 and 28 such that not more than two players hit equal number of sixes. Each of them belongs to different teams among KKR, KXIP, MI, CSK, RCB and DD, such that not more two players belong to same team. Each of them like different colors among Red, Green, Blue, Violet, Grey, Orange and Yellow.

Pandya hits 25 sixes. Only one player hits 28 sixes.The player, who likes yellow, hits 21 sixes.

Reasoning By Gaurav Sir

FOR RBI, SBI, IBPS, LIC, NABARD & OTHER BANK/INSURANCE EXAMS
SUBSCRIBE Champion's Reasoning YouTube Channel

Rohit hits 7 sixes more than the one who likes Green.The only player, who belongs to CSK, likes blue and scores the highest number of sixes.Dhoni hits 4 sixes more than the only player who belongs to KXIP.Players who likes Violet and Green belong to same team.Player, who likes Violet, scores less than 25 sixes.Player, who likes Grey, hitssix less sixes than the one, who likes Orange but not the lowest.Dhoni doesn't like Orange.Sachin hits fewer sixes than Rahul, who hits fewer sixes than Russel. Gayle doesn't belong to MI or KKR. Russel doesn't like Green.Gayle hits more sixes than the only player from DD.

11. Player, who belongs to DD, hits ___ sixes.
(a) 19 (b) 21
(c) 25 (d) 18
(e) None of the above

12. Gayle hits ___ sixes and likes ___.
(a) 21, Yellow (b) 25, Red
(c) 19, Red (d) 21, Green
(e) None of the above

13. Player from MI hits ___ sixes more than Rahul.
(a) 7
(b) 6
(c) 3
(d) Can't be determined
(e) None of the above

14. Total number of sixes hit by the players, who belong to RCB and KKR is ___.
(a) 53 (b) 67
(c) 64 (d) 60
(e) None of the above

15. Russel likes ___ and belongs to __.
(a) Yellow, KKR (b) Red, MI
(c) Grey, MI (d) Yellow, KXIP
(e) None of the above

Directions (16-17): Read the following information's carefully and answer the questions given below

Point K is 20m west of point J. Point J is south of point H. Point H is in the west of point L. Point U is north point K and west of point H. Point Y is in east of point J. A is in midpoint of point K and point J. Point I is in south of point A. The distance between the points are as follows:

AI = KJ = UH = 2AJ = 2JH = 2JY = 4HL

16. What is the direction of point H with respect to point I?
(a) Northwest (b) Northeast
(c) Southeast (d) Southwest
(e) None of the above

17. Point Y is how far and in which direction with respect to point K?
(a) 30m West (b) 40m East
(c) 30m East (d) 50m North
(e) 50m South

Directions (18-20): Read the following information's carefully and answer the questions given below

In a certain code,
A 1 B means A is only brother of B.
A 2 B means A is mother of B.
A 3 B means A is only son of B.
A 4 B means A is father of B.
A 5 B means A is only sister of B.
A 6 B means A is only daughter of B.
U 2 V, R 2 S, S 5 T, T 2 Y, Y 6 W, X 1 Y, V 1 Q, Q 6 P, P 3 R

18. How is U related to W?
(a) Sister (b) Mother
(c) Sister-in-law (d) Daughter
(e) None of the above

19. Which of the following statement is/are definitely not correct?
(a) X is son of T
(b) R is mother of wife of W
(c) Q is daughter of U
(d) Y is granddaughter of R
(e) S is uncle of V

20. Who is mother of father of V?
(a) S (b) T
(c) W (d) R
(e) None of the above

Directions (21-25): Read the following information's carefully and answer the questions given below

Seven passenger trains, M, N, O, P, Q, R, and S operate between two stations A and B. Each train has different numbers of passengers and none of them has more than 90 and not less than 55 passengers on

Reasoning By Gaurav Sir

FOR RBI, SBI, IBPS, LIC, NABARD & OTHER BANK/INSURANCE EXAMS
SUBSCRIBE Champion's Reasoning YouTube Channel

board. Each of the trains departs from Station A on different days from Monday to Sunday of the same week. The total number of passengers on all the trains all together is 530.

Only two trains depart between M and the train, which has 65 passengers. M does not depart after Wednesday. P departs either just after or just before the one, which has 65 passengers. P does not depart on Friday or Thursday. Only two trains depart between P and Q, which does not depart on Thursday. S has 78 passengers and it departs before Q. R departs just after the train, which has 86 passengers. R departs after S but before N, which has 6 fewer passengers than R. O has 3 fewer passengers than M and does not depart on Friday. The total number of passengers in N and M is 148. The total number of passengers in P and M is 169.

21. How many trains departed after O?

(a) Two (b) One
(c) Four (d) Three
(e) None of the above

22. What is the total number of passengers on train Q?

(a) 86 (b) 73
(c) 89 (d) 59
(e) None of the above

23. Train S departed on____.

(a) Saturday (b) Wednesday
(c) Tuesday (d) Thursday
(e) None of the above

24. How many trains departed between P and S?

(a) Four (b) Three
(c) Five (d) None
(e) None of the above

25. Train ___ has ___ passengers.

(a) M - 88 (b) R - 73
(c) P - 80 (d) Q - 65
(e) None of the above

Directions (26-27): In the question given below, a passage is given followed by three statements which may or may not be inferred from the passage. Select the correct combination of statements that can be inferred.

26. The government's conservation watchdog, Natural England, has issued licences to destroy 170,000 wild birds, eggs and nests, including rare and declining species such as curlews and swifts, in the past five years. The most targeted species is the greylag goose, with licences issued to kill 67,586 individual geese or destroy their eggs or nests. All wild birds and their nests are protected under wildlife laws but licences can be sought to kill wild birds and destroy nests if birds are found to be seriously damaging farming, fishing and forestry interests or endangering people's health and safety.

1. The government can allow the killing of legally protected birds.
2. Fewer swifts were killed as compared to greylag geese.
3. The government values public safety over the protection of birds.

(a) 1 and 2 (b) 2 and 3
(c) 1 and 3 (d) 1, 2 and 3
(e) Only 1

27. While there is no clear formula for coming up with solutions to difficult problems, evidence certainly suggests that taking a break to think about something else should hardly be seen as a failure. Whether breaks improve your mood enough to get back into the problem or provides the new perspective you needed, embracing the value of an incubation period may move from stuck to solution. And once you decide to take a break, do something that pulls your mind away from both the problem and any negative feelings that may be dominating your thoughts.

1. A break may be useful while solving difficult problems.
2. Negative feelings can hinder one from finding a solution to a difficult problem.
3. A new perspective is the only way to solve a difficult problem.

(a) Only 1 (b) Only 1 and 2
(c) Only 1 and 3 (d) Only 2 and 3
(e) All 1, 2 and 3

Reasoning By Saurav Sir

FOR RBI, SBI, IBPS, LIC, NABARD & OTHER BANK/INSURANCE EXAMS
SUBSCRIBE Champion's Reasoning YouTube Channel

Directions (28-29): Read the following information's carefully and answer the questions given below

Six persons M, N, O, P, Q and R have secured different marks in an exam. P secured better marks than at least two persons. N secured better marks than M and P. O secured better marks than only Q. N does not secure better rank than R. M doesn't score 3rd lowest marks.

28. Who among the following secured the highest marks?

(a) M (b) N
(c) P (d) Q
(e) R

29. How many persons secured better marks than P?

(a) Three (b) Two
(c) One (d) Four
(e) None of these

30. In the question, assuming the given statements to be true, find which of the conclusion (s) among given three conclusions is /are definitely true and then give your answer accordingly.

Statements: T > O = W; S ≤ F < W; U < S

Conclusions:

I. T > U
II. S ≤ W
III. O ≥ U

(a) Only conclusion I is true.
(b) Only conclusions I and II are true.
(c) Only conclusion III is true.
(d) Only conclusions II and III are true.
(e) All conclusions I, II and III are false.

Reasoning By Saurav Sir

FOR RBI, SBI, IBPS, LIC, NABARD & OTHER BANK/INSURANCE EXAMS
SUBSCRIBE Champion's Reasoning YouTube Channel

Solutions

Solutions (1-5)

For the first letter in the code- The first letter is as per the number of vowels in the word.
The code will be according to the given order:

No. of vowels in the word	Code
1	A
2	B
3	C
4	D

For example -'alive' -In this word three vowels letters 'a', 'i' and 'e'. So, the first letter of code for alive is 'C'.
For the number in the code – The number in the code is equal to the highest place value (in the alphabetical series) of the letter present in the word.
For the last letter of the code – The immediate succeeding letter of the second letter present in the given word according to the English alphabet.
Example: Launched
There are 3 vowels in the word, so first letter in the code is "C".
Highest letter of word is "U", its place value is "21"
2nd letter of the word is "A". Its immediate succeeding letter in the English Alphabetical Series is "B"
"launched" is coded as "C21B"

1. (d) 2. (e) 3. (b) 4. (c) 5. (d)

Solutions (6-10)

From (2), Z and M must be in row 2. Also, W must at one of the extreme ends.
Case 1:

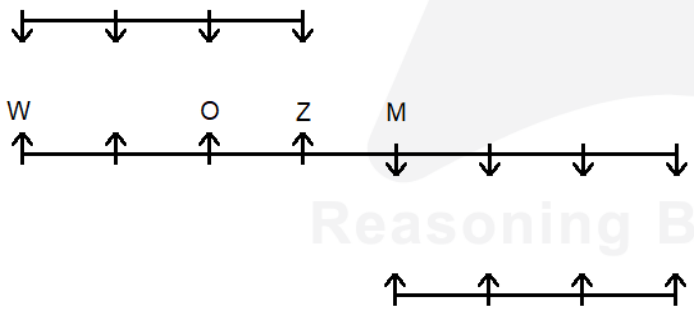

Case 2:

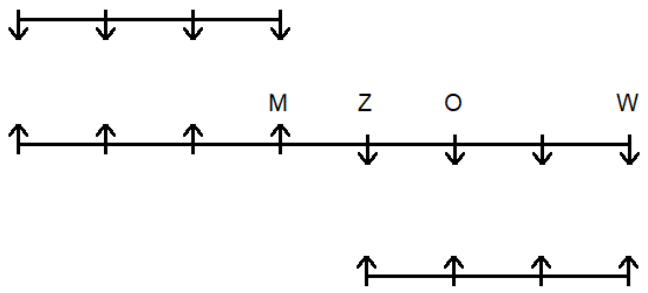

So, X and N can be in row 1 or row 3 as shown below,
Case 1:

FOR RBI, SBI, IBPS, LIC, NABARD & OTHER BANK/INSURANCE EXAMS
SUBSCRIBE Champion's Reasoning YouTube Channel

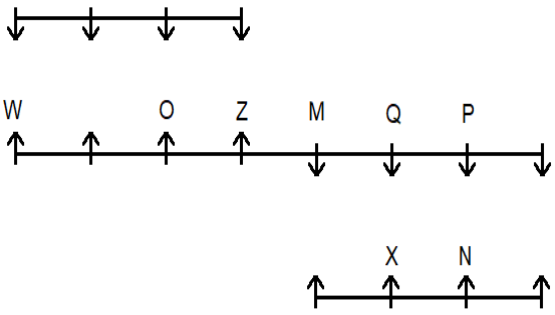

Case 2:

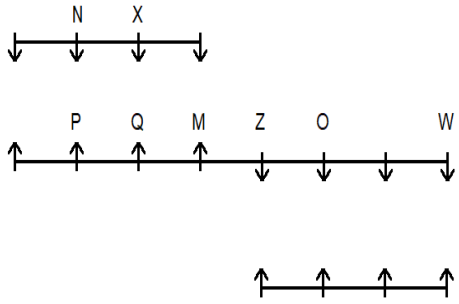

From (14), case 2 must be rejected. Also, K sits in row 2, Y and L sit in row 3. And, U sits at one of the extreme end.

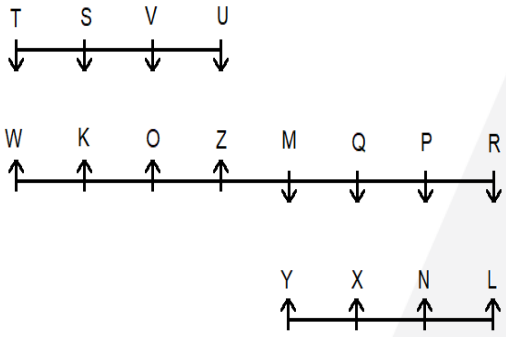

6. (d) 7. (b) 8. (b) 9. (c) 10. (a)

Reasoning By Saurav Sir

Solutions (11-15)

Rohit hits either 25 sixes or 28 sixes.

Case I: Rohit hits 25 sixes:

Player	No. of sixes	Team	Color
Pandya	25		
	28		
	21		Yellow
Rohit	25		
	18		Green

Case II: Rohit hits 28 sixes:

Player	No. of sixes	Team	Color
Pandya	25		
Rohit	28		
	21		Yellow
	21		Green

FOR RBI, SBI, IBPS, LIC, NABARD & OTHER BANK/INSURANCE EXAMS
SUBSCRIBE Champion's Reasoning YouTube Channel

Rohit belongs to CSK.
Player, who belongs to KXIP, likes Yellow.
Dhoni hits 25 sixes.

Player	No. of sixes	Team	Color
Pandya	25		
Rohit	28	CSK	Blue
	21	KXIP	Yellow
	21	**	Green
Dhoni	25		
		**	Violet

Player, who likes Grey, hits 19 sixes.
Pandya likes Orange and Dhoni likes Red.

Player	No. of sixes	Team	Color
Pandya	25		Orange
Rohit	28	CSK	Blue
	21	KXIP	Yellow
	21	**	Green
Dhoni	25		Red
	18	**	Violet
	19		Grey

Sachin hits 18 sixes, Rahul hits 19 sixes and Russel hits 21 sixes and belongs to KXIP.
Gayle hits 21 sixes and likes Green.

Player	No. of sixes	Team	Color
Pandya	25		Orange
Rohit	28	CSK	Blue
Russel	21	KXIP	Yellow
Gayle	21	**	Green
Dhoni	25		Red
Sachin	18	**	Violet
Rahul	19		Grey

Rahul belongs to DD.
Gayle and Sachin belong to RCB.
Pandya and Dhoni belong to MI or KKR.
The final table is given below:

Player	No. of sixes	Team	Color
Pandya	25	MI/KKR	Orange
Russel	21	KXIP	Yellow
Rohit	28	CSK	Blue
Gayle	21	RCB	Green
Dhoni	25	KKR/MI	Red
Sachin	18	RCB	Violet
Rahul	19	DD	Grey

11. (a) 12. (d) 13. (b) 14. (c) 15. (d)

Solutions (16-27)

Given that,
Point K is 20m west of point J. Point J is south of point H. Point H is in the west of point L. Point U is north point K and west of point H. Point Y is in east of point J. A is in midpoint of point K and point J. Point I is in south of point A.

Reasoning By Saurav Sir

FOR RBI, SBI, IBPS, LIC, NABARD & OTHER BANK/INSURANCE EXAMS
SUBSCRIBE Champion's Reasoning YouTube Channel

Now the distances are given: AI = KJ = UH = 2AJ = 2JH = 2JY = 4HL
AI = KJ = UH = 2AJ = 2JH = 2JY = 4HL
KJ = 20m = AI = UH
UH = 20 = 2AJ = 10m.
2AJ = 10m = 2JH
2JH = 10m = 2JY
2JY = 10m = 4HL =5m.
So, the final arrangement is as follows:

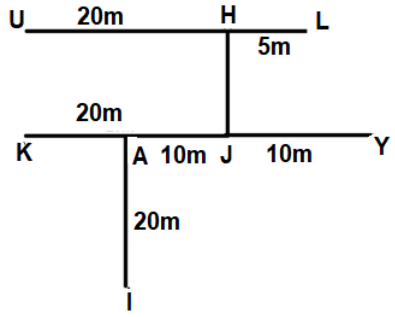

16. (b) 17. (c)

Solutions (18-20)

By decoding the codes, we get:
U 2 V means U is mother of V.
V 1 Q means V is only brother of Q.
Q 6 P means Q is only daughter of P.
P 3 R means P is only son of R.

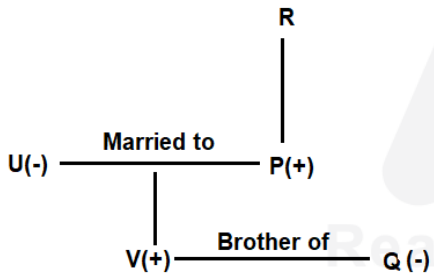

R 2 S means R is mother of S.
S 5 T means S is only sister of T.
T 2 Y means T is mother of Y.
Y 6 W means Y is only daughter of W.
X 1 Y means X is only brother of Y.
The final arrangement is as follows:

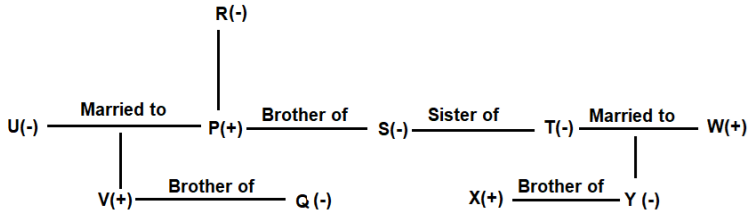

18. (c) 19. (e) 20. (d)

FOR RBI, SBI, IBPS, LIC, NABARD & OTHER BANK/INSURANCE EXAMS
SUBSCRIBE Champion's Reasoning YouTube Channel

Solutions (21-25)

From clues 1, 2, 3 and 4, we conclude that M departs on any day among Monday, Tuesday and Wednesday.

Case 1: When M departs on Monday.

Days	Trains	No. of passengers
Monday	M	
Tuesday		
Wednesday	P	
Thursday		65
Friday		
Saturday		
Sunday		

Case 2: When M departs on Tuesday.

Days	Trains	No. of passengers
Monday		
Tuesday	M	
Wednesday		
Thursday		
Friday		65
Saturday	P	
Sunday		

Case 3: When M departs on Wednesday.

Days	Trains	No. of passengers
Monday		
Tuesday		
Wednesday	M	
Thursday		
Friday		
Saturday		65
Sunday	P	

From clues 5, 6, 7 and 8, we conclude thatS departs on Monday or Tuesday and R on Thursday or Friday and N on Friday or Sunday.From (5), case 3 is rejected as Q cannot be placed.

Case 1: When M departs on Monday.

Days	Trains	No. of passengers
Monday	M	83
Tuesday	S	78
Wednesday	P	86
Thursday	R	65
Friday	N	65
Saturday	Q	73
Sunday	O	80

Case 2(a): When M departs on Tuesday and R departs on Friday.

Days	Trains	No. of passengers
Monday	S	78
Tuesday	M	89
Wednesday	Q	73
Thursday	O	86
Friday	R	65
Saturday	P	80
Sunday	N	59

Reasoning By Saurav Sir

FOR RBI, SBI, IBPS, LIC, NABARD & OTHER BANK/INSURANCE EXAMS
SUBSCRIBE Champion's Reasoning YouTube Channel

Case 2(b):When M departs on Tuesday and R departs on Thursday.

Days	Trains	No. of passengers
Monday	S	78
Tuesday	M	83
Wednesday	Q	86
Thursday	R	52
Friday	N	65
Saturday	P	86
Sunday	O	80

From (12), we conclude that, case 1 ane case 2(b) must be rejected as as the number of passengers contradict the information given in clues.

The final arrangement is as follows:

Case 2: When M depart on Tuesday.

Days	Trains	No. of passengers
Monday	S	78
Tuesday	M	89
Wednesday	Q	73
Thursday	O	86
Friday	R	65
Saturday	P	80
Sunday	N	59

21. (d) 22. (b) 23. (e) 24. (a) 25. (c)

26. (d)

The passage states that the government's agency (Natural England) has granted licences for the killing of birds. This implies that the government has the power to do it (grant licences to kill protected birds). Therefore, 1 can be inferred from the passage.

The passage states that the most targeted species was the greylag goose (as more licences were given to kill greylag goose than any other bird). This implies that more greylag geese were killed as compared to any other bird, including swifts. Therefore, 2 can be inferred from the passage.

The passage states that under the law all wild birds and their nests are protected but licences can be sought to kill wild birds and destroy nests if birds are found to be endangering people's health and safety. This implies that though the government values wild birds, it accords a higher priority to public safety (as public safety trumps the protection of bird species). Therefore, 3 can be inferred.

Thus, (d) is the correct answer.

27. (a)

The premise tells us that embracing an incubation period (a break) may help one find a solution to a difficult problem that he/ she is stuck in. So, 1 follows. Thus, (a) is the right answer.

2 does not follow, as the premise only instructs one to rid oneself of negative feelings; it does not necessarily attribute the difficulty in solving the problem to be caused by the negative feeling. 3 does not follow as the premise tells us that a new and fresh perspective may help one find a solution, but does not say that it will necessarily do so. Thus, A is the right answer.

Solutions (28-29)

P secured better marks than at least two persons. N secured better marks than M and P. O secured better marks than only Q. N does not secure better rank than R. M doesn't score 3rd lowest marks. So, we have,

R > N > M > P > O > Q

28. (e) 29. (a)

FOR RBI, SBI, IBPS, LIC, NABARD & OTHER BANK/INSURANCE EXAMS
SUBSCRIBE Champion's Reasoning YouTube Channel

30. (a)

Given statements: T>O = W; S≤F<W; U<S

On combining, we get

T>O = W> F ≥ S > U

Conclusions:

I. T>U: True (As T>O = W > F ≥ S > U, so, T > U)

II. S≤W: False (As W > F ≥ S, so, W>S)

III. O≥U: False(As O = W > F ≥ S > U, so, O>U)

So, only conclusion I follows.

Hence, option a.

Previous

***

Reasoning By Saurav Sir

FOR RBI, SBI, IBPS, LIC, NABARD & OTHER BANK/INSURANCE EXAMS
SUBSCRIBE Champion's Reasoning YouTube Channel

Unlock Our DIGITAL UBRARY for your Preparation.

FEATURES
All Live Classes
All Test Series
Live Doubt Room
All Mock Video Solutions
All Revision Batches
All Recorded Videos
All eBooks
Personality Development
Spoken English
Interview Preparation
Live Webinars with Industry Experts

Use code Y188 for Maximum Discount on Bank Maha pack / Batches / Books & eBooks.