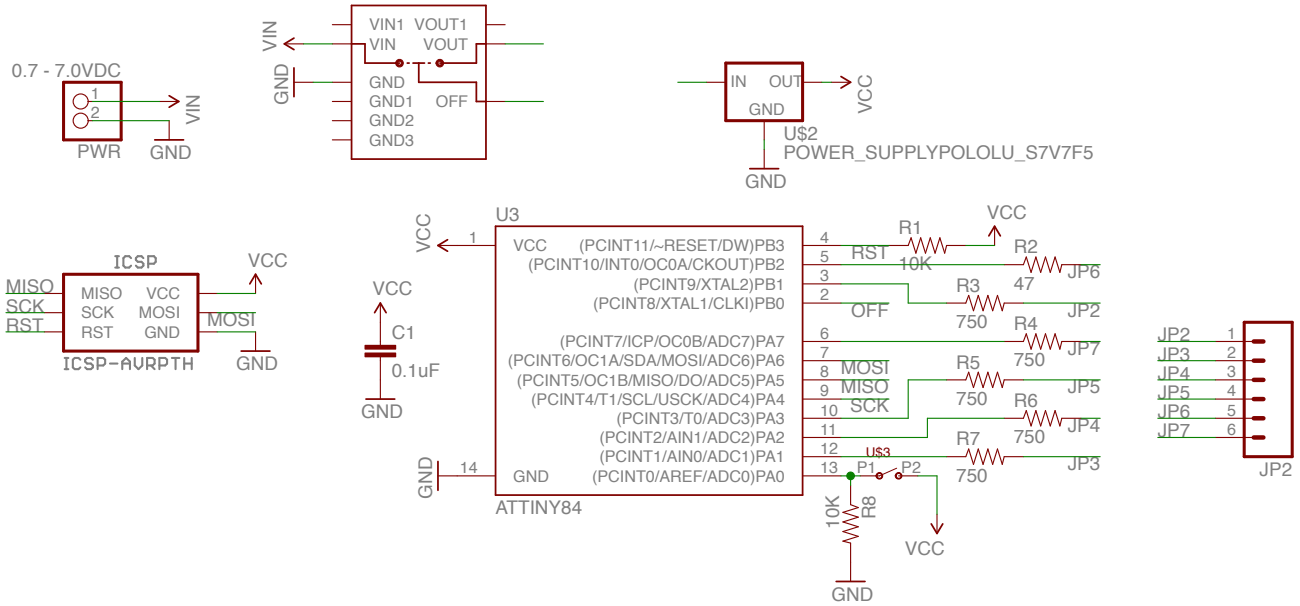

Released under the Creative Commons
Attribution Share-Alike 3.0 License
http://creativecommons.org/licenses/by-sa/3.0

TITLE: CocoBra

Design by:

REV:

Date: 5/29/13 9:09 PM

Sheet: 1/1