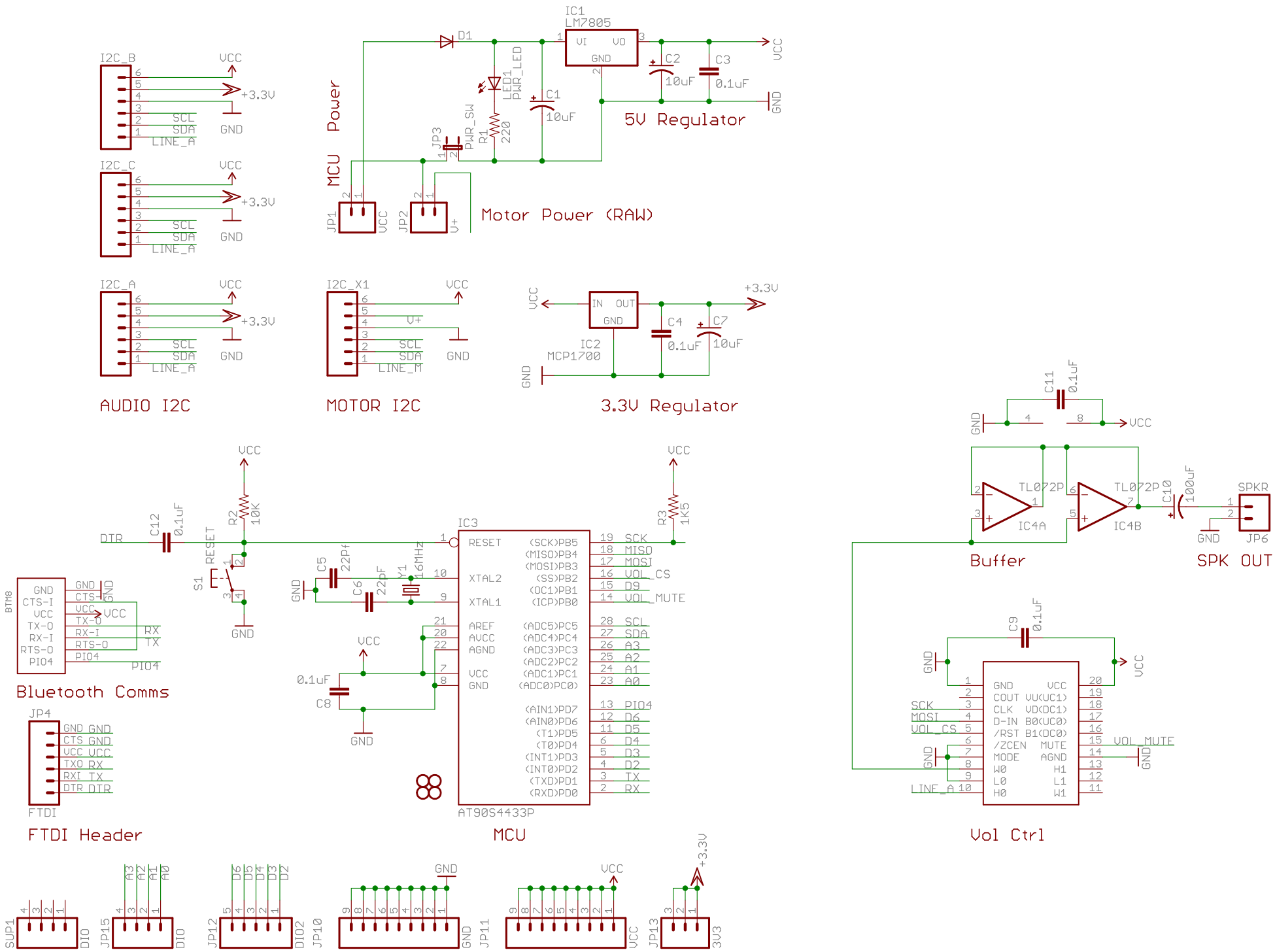
I2C_B
VCC
+3.3V
SCL
SDA
GND
LINE_A
I2C_C
I2C_A
I2C_X1
V+
LINE_M
AUDIO I2C
MOTOR I2C
IC1
LM7805
VI
VO
GND
D1
LED1
PWR_LED
R1
220
PWR_SW
JP3
C1
10uF
C2
10uF
C3
0.1uF
5V Regulator
MCU Power
JP1
JP2
Motor Power (RAW)
IC2
MCP1700
IN
OUT
C4
0.1uF
C7
10uF
3.3V Regulator
C11
0.1uF
TL072P
IC4A
IC4B
C10
100uF
SPKR
JP6
Buffer
SPK OUT
C9
0.1uF
GND
COUT
CLK
D-IN
/RST
/ZCEN
MODE
W0
L0
H0
VCC
VU(VC1)
VD(DC1)
B0(UC0)
B1(DC0)
MUTE
AGND
H1
L1
W1
SCK
MOSI
VOL_CS
VOL_MUTE
LINE_A
BTM8
CTS-I
TX-O
RX-I
RTS-O
PIO4
RX
TX
Bluetooth Comms
JP4
FTDI
FTDI Header
DTR
C12
0.1uF
R2
10K
RESET
S1
C5
22Pf
C6
22pF
Y1
16MHz
XTAL2
XTAL1
AREF
AVCC
AGND
C8
0.1uF
IC3
AT90S4433P
(SCK)PB5
(MISO)PB4
(MOSI)PB3
(SS)PB2
(OC1)PB1
(ICP)PB0
(ADC5)PC5
(ADC4)PC4
(ADC3)PC3
(ADC2)PC2
(ADC1)PC1
(ADC0)PC0
(AIN1)PD7
(AIN0)PD6
(T1)PD5
(T0)PD4
(INT1)PD3
(INT0)PD2
(TXD)PD1
(RXD)PD0
R3
1K5
MCU
SUP1
DIO
JP15
A3
A2
A1
A0
JP12
D6
D5
D4
D3
D2
DIO2
JP10
JP11
JP13
3V3