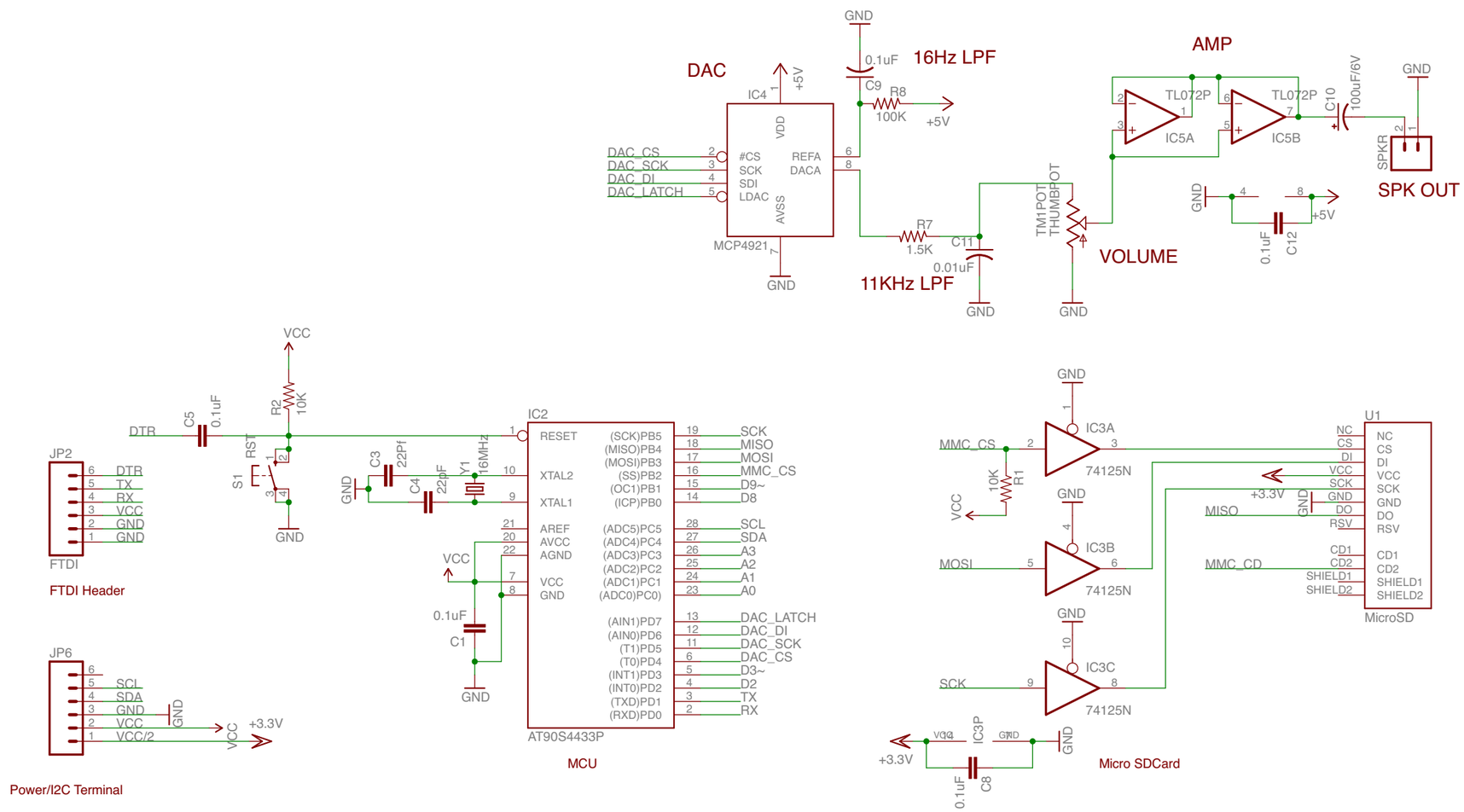
DAC
IC4
MCP4921
DAC_CS
DAC_SCK
DAC_DI
DAC_LATCH
#CS
SCK
SDI
LDAC
VDD
VSS
REFA
DACA
+5V
GND
0.1uF
C9
16Hz LPF
R8
100K
R7
1.5K
C11
0.01uF
11KHz LPF
TM1POT
THUMBPOT
VOLUME
AMP
TL072P
IC5A
IC5B
C10
100uF/6V
SPKR
SPK OUT
C12
VCC
R2
10K
DTR
C5
0.1uF
RST
S1
JP2
FTDI
FTDI Header
C3
22PF
C4
22pF
Y1
16MHz
IC2
RESET
XTAL2
XTAL1
AREF
AVCC
AGND
(SCK)PB5
(MISO)PB4
(MOSI)PB3
(SS)PB2
(OC1)PB1
(ICP)PB0
(ADC5)PC5
(ADC4)PC4
(ADC3)PC3
(ADC2)PC2
(ADC1)PC1
(ADC0)PC0)
(AIN1)PD7
(AIN0)PD6
(T1)PD5
(T0)PD4
(INT1)PD3
(INT0)PD2
(TXD)PD1
(RXD)PD0
SCK
MISO
MOSI
MMC_CS
D9~
D8
SCL
SDA
A3
A2
A1
A0
DAC_LATCH
DAC_DI
DAC_SCK
DAC_CS
D3~
D2
TX
RX
AT90S4433P
MCU
C1
JP6
SCL
SDA
GND
VCC
VCC/2
+3.3V
Power/I2C Terminal
IC3A
IC3B
IC3C
74125N
R1
10K
MMC_CS
MISO
MOSI
SCK
U1
NC
CS
DI
VCC
SCK
GND
DO
RSV
CD1
CD2
SHIELD1
SHIELD2
MMC_CD
MicroSD
IC3P
C8
0.1uF
Micro SDCard