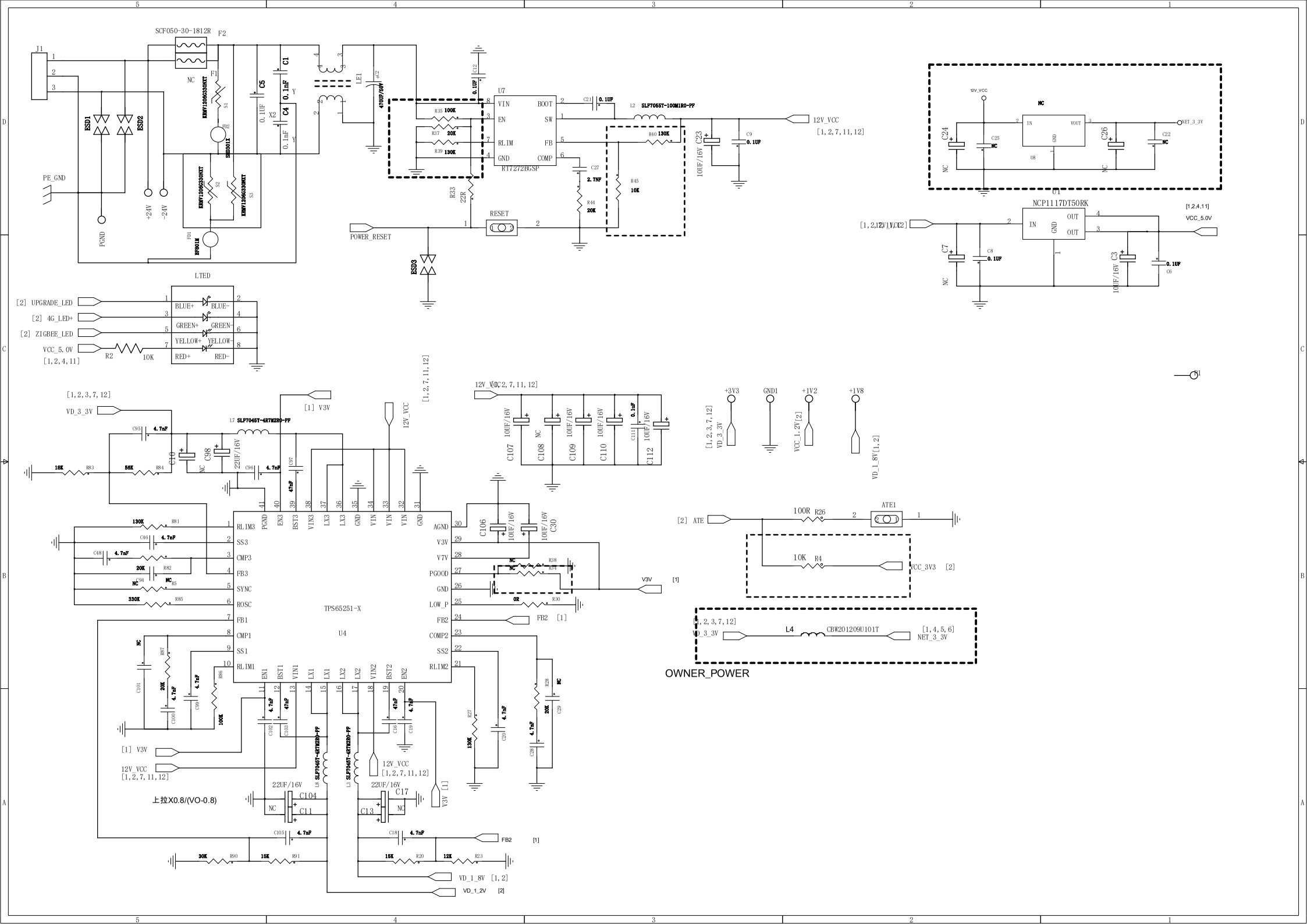

SCF050-30-1812R
F2
J1
ESD1
ESD2
PE_GND
PGND
+24V
-24V
KRMV1206G330NXT
SMD301X
BF801M
LE1
470UF/50V
U7
RT7272BGSP
VIN
EN
RLIM
GND
BOOT
SW
FB
COMP
SLF7055T-100M1R0-PF
12V_VCC
[1, 2, 7, 11, 12]
RESET
POWER_RESET
ESD3
NCP1117DT50RK
VCC_5.0V
LTED
[2] UPGRADE_LED
[2] 4G_LED+
[2] ZIGBEE_LED
VCC_5.0V
[1, 2, 4, 11]
BLUE+
BLUE-
GREEN+
GREEN-
YELLOW+
YELLOW-
RED+
RED-
VD_3_3V
[1] V3V
SLF7045T-4R7M2R0-PF
TPS65251-X
U4
RLIM3
SS3
CMP3
FB3
SYNC
ROSC
FB1
CMP1
SS1
RLIM1
AGND
V3V
V7V
PGOOD
GND
LOW_P
FB2
COMP2
SS2
RLIM2
FB2 [1]
V3V [1]
12V_VCC
[1, 2, 7, 11, 12]
上拉X0.8/(VO-0.8)
VD_1_8V [1, 2]
VD_1_2V [2]
+3V3
GND1
+1V2
+1V8
VD_1_8V[1, 2]
VCC_1.2V[2]
[2] ATE
ATE1
VCC_3V3 [2]
L4
CBW201209U101T
[1, 4, 5, 6]
NET_3_3V
OWNER_POWER

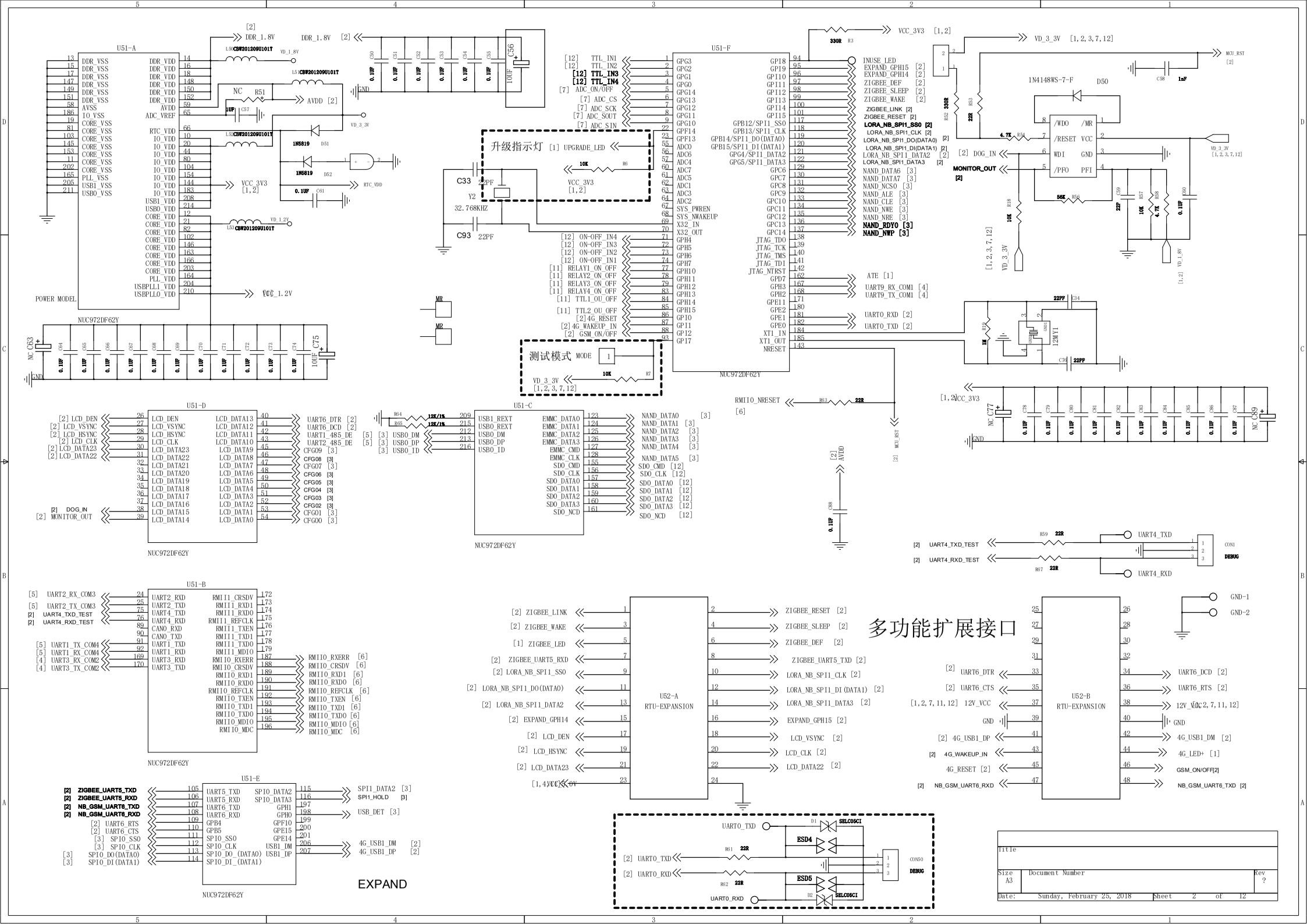
U51-A
U51-F
U51-D
U51-C
U51-B
U51-E
NUC972DF62Y
POWER MODEL
升级指示灯 [1] UPGRADE_LED
测试模式 MODE
多功能扩展接口
U52-A
RTU-EXPANSION
U52-B
RTU-EXPANSION
EXPAND
DEBUG
Title
Size A3
Document Number
Rev ?
Date: Sunday, February 25, 2018
Sheet 2 of 12

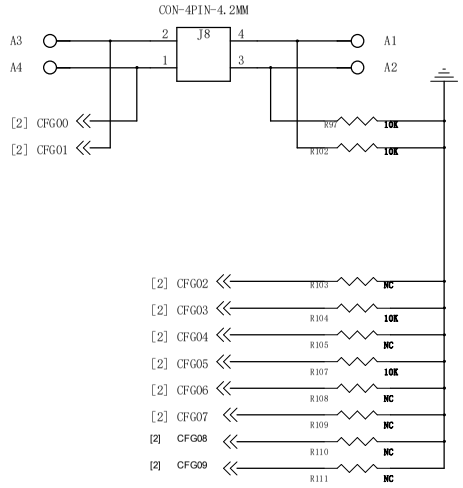

Cfg1/PA1	Cfg0/PA0	Bootting from
ON	ON	USB.
ON	OFF	eMMC Flash.
OFF	ON	NAND Flash.
OFF	OFF	SPI Flash.

Cfg2	System Clock from
ON	12MHz crystal.
OFF	UPLL output.

Cfg3	Watch Dog Setting
ON	OFF after power on.
OFF	ON after power on.

Cfg4/PA4	Setting PJ[4:0]
ON	As GPIO pin.
OFF	As JTAG interface.

Cfg5/PA5	UART Debug Message
ON	Output turn ON.
OFF	Output turn OFF.

Cfg7	Cfg6	NAND Flash Page Size
ON	ON	2KB
ON	OFF	4KB
OFF	ON	8KB
OFF	OFF	None

Cfg9	Cfg8	NAND Flash ECC type
ON	ON	BCH T12.
ON	OFF	BCH T15.
OFF	ON	BCH T24.
OFF	OFF	None

Startup options

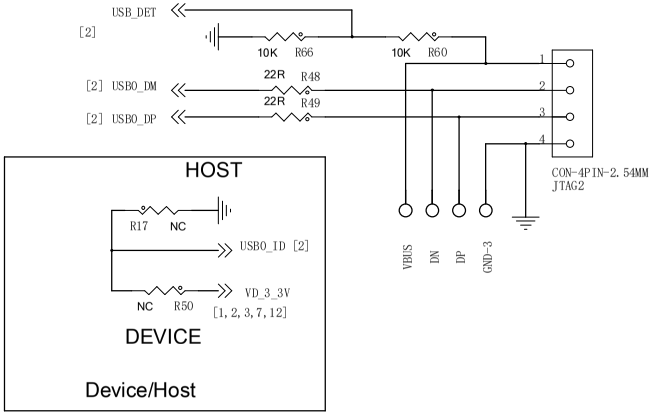

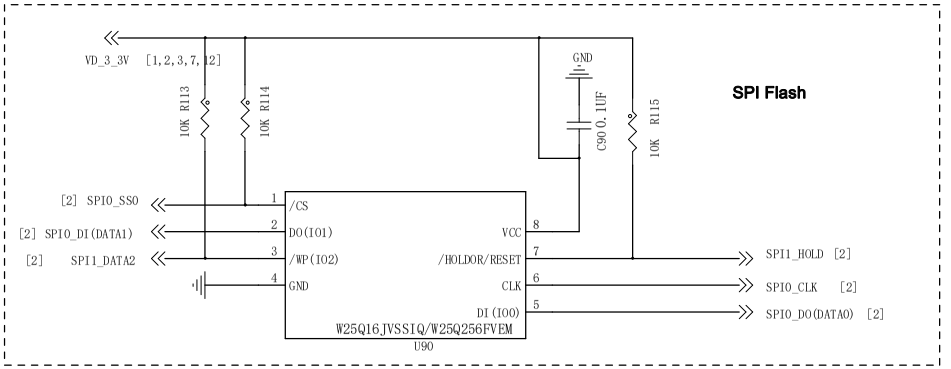

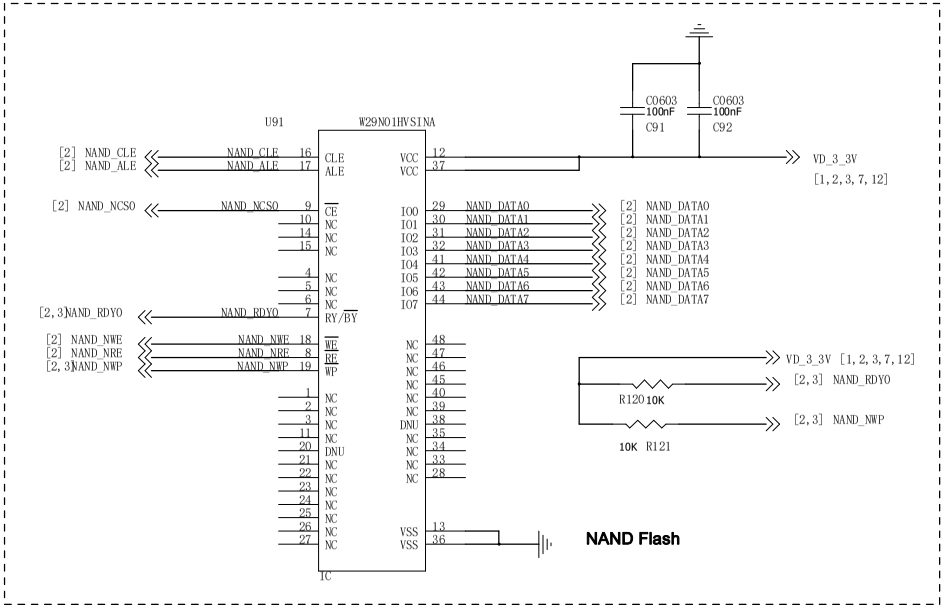

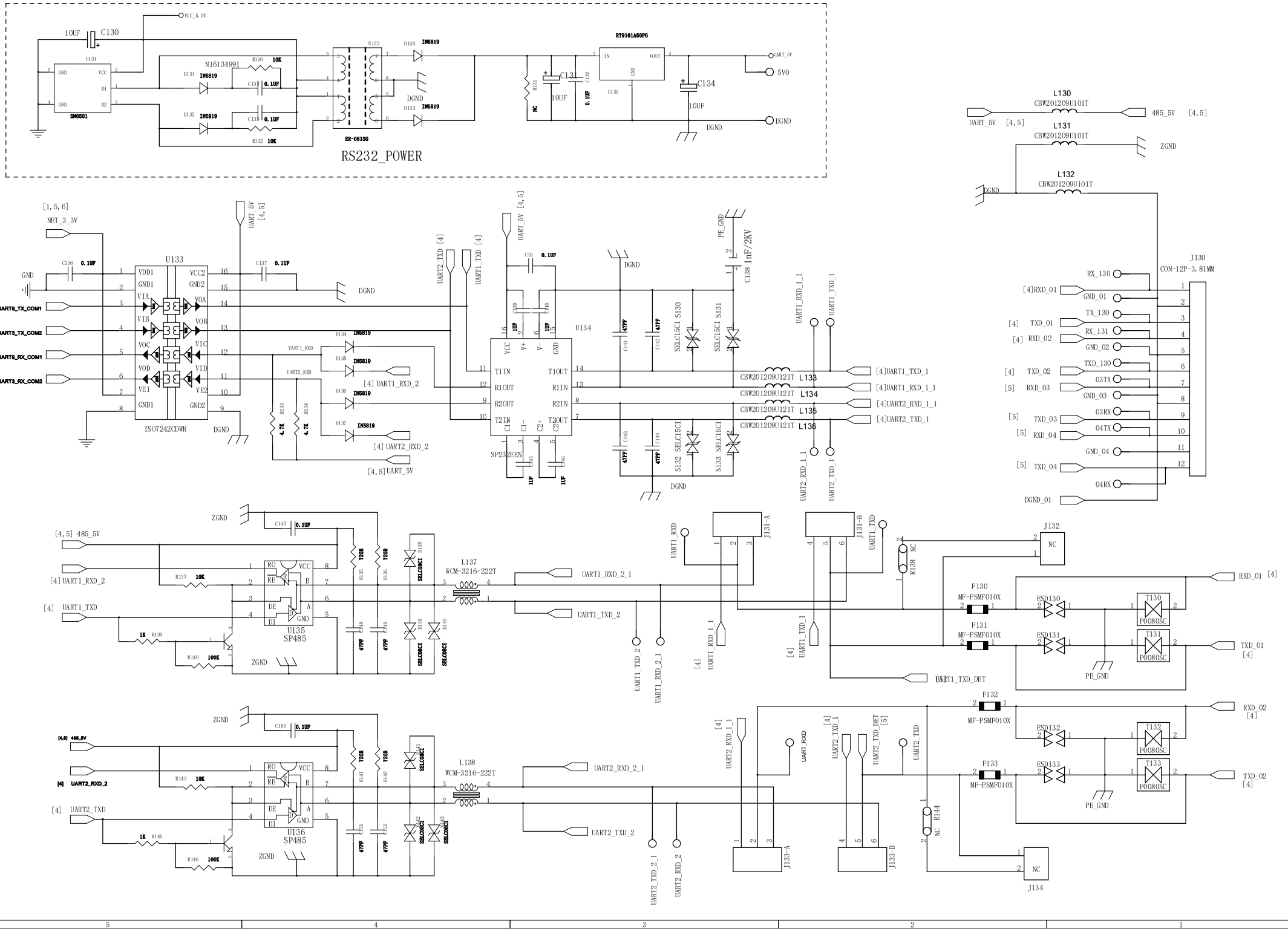
RS232_POWER
U131
SM6501
C130
10UF
VCC_5.0V
N16134991
R130 10K
R132 10K
C133 0.1UF
C134 0.1UF
D131 IN5819
D132 IN5819
D130 IN5819
D133 IN5819
U132
ER-081SG
DGND
RT9161A50PG
C131
10UF
C132 0.1UF
R131 NC
C134
10UF
UART_5V
5VO
DGND
U133
ISO7242CDWR
VDD1
GND1
VIA
VIB
VOC
VOD
VE1
GND1
VCC2
GND2
VOA
VOB
VIC
VID
VE2
GND2
C136 0.1UF
C137 0.1UF
[1,5,6]
NET_3_3V
GND
[2] UART0_TX_COM1
[2] UART3_TX_COM2
[2] UART0_RX_COM1
[2] UART3_RX_COM2
UART_5V [4,5]
DGND
D134 IN5819
D135 IN5819
D136 IN5819
D137 IN5819
UART1_RXD
UART2_RXD
[4] UART1_RXD_2
[4] UART2_RXD_2
[4,5]UART_5V
R133 4.7K
R134 4.7K
U134
SP232EEN
T1IN
R1OUT
R2OUT
T2IN
T1OUT
R1IN
R2IN
T2OUT
C1+
C1-
C2+
C2-
VCC
V+
V-
GND
C139 1UF
C140 1UF
C145 1UF
C146 1UF
C141 47PF
C142 47PF
C143 47PF
C144 47PF
SELC15CI S130
SELC15CI S131
SELC15CI S132
SELC15CI S133
UART2_TXD [4]
UART1_TXD [4]
UART_5V [4,5]
C31 0.1UF
PE_GND
C138 1nF/2KV
UART1_RXD_1_1
UART1_TXD_1
UART2_RXD_1_1
UART2_TXD_1
CBW201209U121T L133
CBW201209U121T L134
CBW201209U121T L135
CBW201209U121T L136
[4]UART1_TXD_1
[4]UART1_RXD_1_1
[4]UART2_RXD_1_1
[4]UART2_TXD_1
L130
CBW201209U101T
UART_5V [4,5]
485_5V [4,5]
L131
CBW201209U101T
ZGND
L132
CBW201209U101T
DGND
J130
CON-12P-3.81MM
RX_130
[4]RXD_01
GND_01
TX_130
[4] TXD_01
RX_131
[4] RXD_02
GND_02
TXD_130
[4] TXD_02
03TX
[5] RXD_03
GND_03
03RX
[5] TXD_03
04TX
[5] RXD_04
GND_04
[5] TXD_04
04RX
DGND_01
ZGND
C147 0.1UF
[4,5] 485_5V
[4]UART1_RXD_2
[4] UART1_TXD
R137 10K
R139 1K
R140 100K
U135
SP485
RO
RE
DE
DI
VCC
B
A
GND
R135 720R
R136 720R
D138 SELC08CI
D139 SELC08CI
D140 SELC08CI
C148 47PF
C149 47PF
L137
WCM-3216-222T
UART1_RXD_2_1
UART1_TXD_2
UART1_TXD_2
UART1_RXD_2_1
UART1_RXD
UART1_TXD
J131-A
J131-B
R138 NC
[4] UART1_RXD_1_1
[4] UART1_TXD_1
UART1_TXD_DET
J132
NC
F130
MF-PSMF010X
F131
MF-PSMF010X
ESD130
ESD131
T130
T131
P0080SC
RXD_01 [4]
TXD_01 [4]
PE_GND
ZGND
C150 0.1UF
[4,5] 485_5V
[4] UART2_RXD_2
[4] UART2_TXD
R143 10K
R145 1K
R146 100K
U136
SP485
R141 720R
R142 720R
D141 SELC08CI
D142 SELC08CI
D143 SELC08CI
C151 47PF
C152 47PF
L138
WCM-3216-222T
UART2_RXD_2_1
UART2_TXD_2
UART2_TXD_2_1
UART2_RXD_2
UART_RXD
UART2_TXD
UART2_TXD_DET [5]
[4] UART2_RXD_1_1
[4] UART2_TXD_1
J133-A
J133-B
R144 NC
J134
NC
F132
MF-PSMF010X
F133
MF-PSMF010X
ESD132
ESD133
T132
T133
P0080SC
RXD_02 [4]
TXD_02 [4]
PE_GND

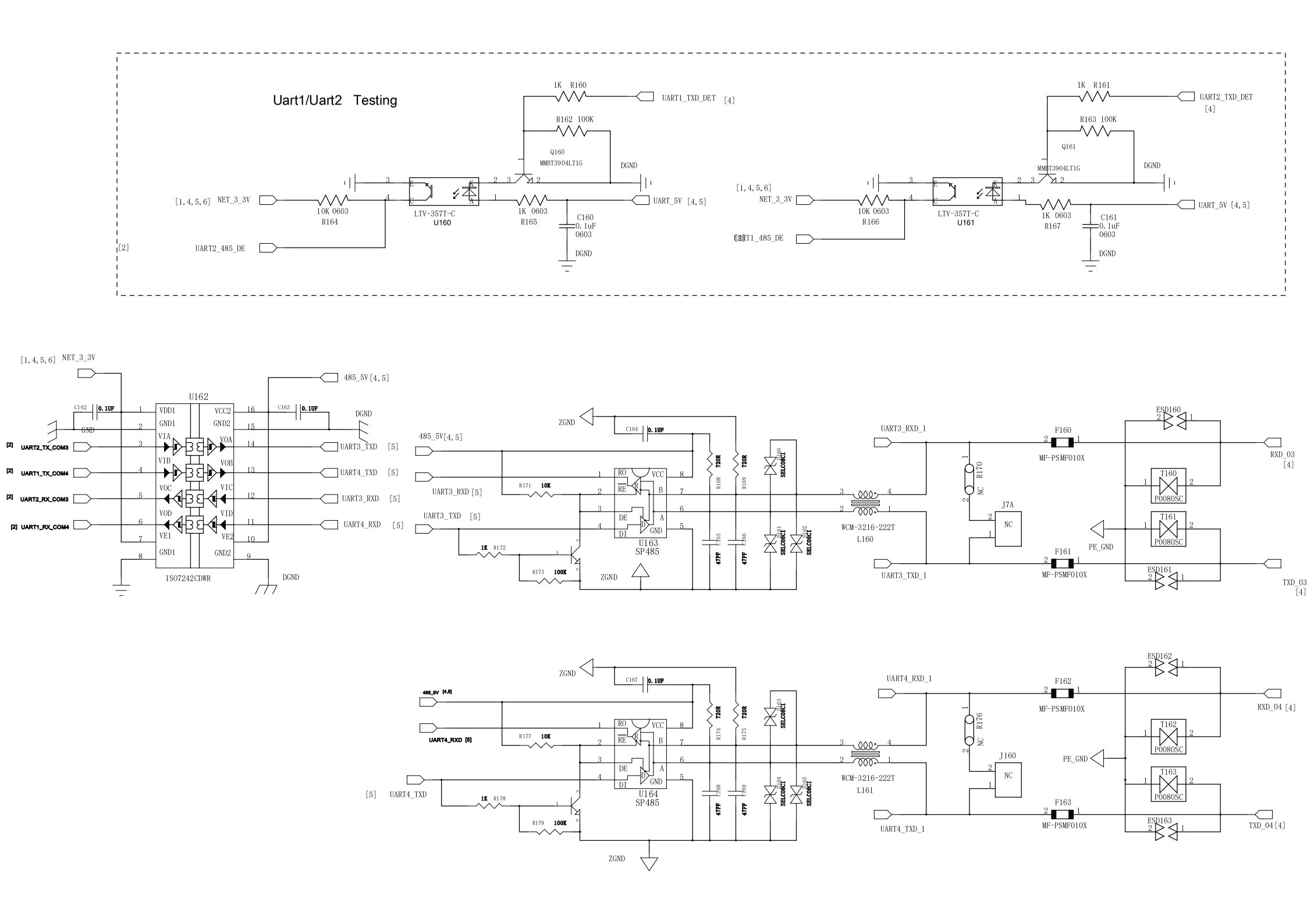
Uart1/Uart2 Testing
1K R160
UART1_TXD_DET [4]
R162 100K
Q160
MMBT3904LT1G
DGND
[1, 4, 5, 6] NET_3_3V
10K 0603
R164
LTV-357T-C
U160
1K 0603
R165
C160
0.1uF
0603
UART_5V [4, 5]
[2]
UART2_485_DE
1K R161
UART2_TXD_DET
[4]
R163 100K
Q161
MMBT3904LT1G
[1, 4, 5, 6]
NET_3_3V
10K 0603
R166
LTV-357T-C
U161
1K 0603
R167
C161
0.1uF
0603
UART_5V [4, 5]
UART1_485_DE
[1, 4, 5, 6] NET_3_3V
U162
485_5V[4, 5]
C162 0.1UF
C163 0.1UF
DGND
GND
VDD1
GND1
VIA
VIB
VOC
VOD
VE1
VCC2
GND2
VOA
VOB
VIC
VID
VE2
[2] UART2_TX_COM3
[2] UART1_TX_COM4
[2] UART2_RX_COM3
[2] UART1_RX_COM4
UART3_TXD [5]
UART4_TXD [5]
UART3_RXD [5]
UART4_RXD [5]
ISO7242CDWR
ZGND
C164 0.1UF
485_5V[4, 5]
UART3_RXD [5]
UART3_TXD [5]
R171 10K
1K R172
R173 100K
RO
RE
DE
DI
VCC
B
A
GND
U163
SP485
R168 720R
R169 720R
C165 47PF
C166 47PF
SBLC08C1
UART3_RXD_1
UART3_TXD_1
WCM-3216-222T
L160
R170 NC
J7A
NC
F160
MF-PSMF010X
F161
MF-PSMF010X
ESD160
ESD161
T160
P0080SC
T161
P0080SC
PE_GND
RXD_03 [4]
TXD_03 [4]
ZGND
C167 0.1UF
485_5V [4,5]
UART4_RXD [5]
R177 10K
1K R178
R179 100K
[5] UART4_TXD
U164
SP485
R174 720R
R175 720R
C168 47PF
C169 47PF
UART4_RXD_1
UART4_TXD_1
WCM-3216-222T
L161
R176 NC
J160
NC
F162
MF-PSMF010X
F163
MF-PSMF010X
ESD162
ESD163
T162
P0080SC
T163
P0080SC
PE_GND
RXD_04 [4]
TXD_04 [4]

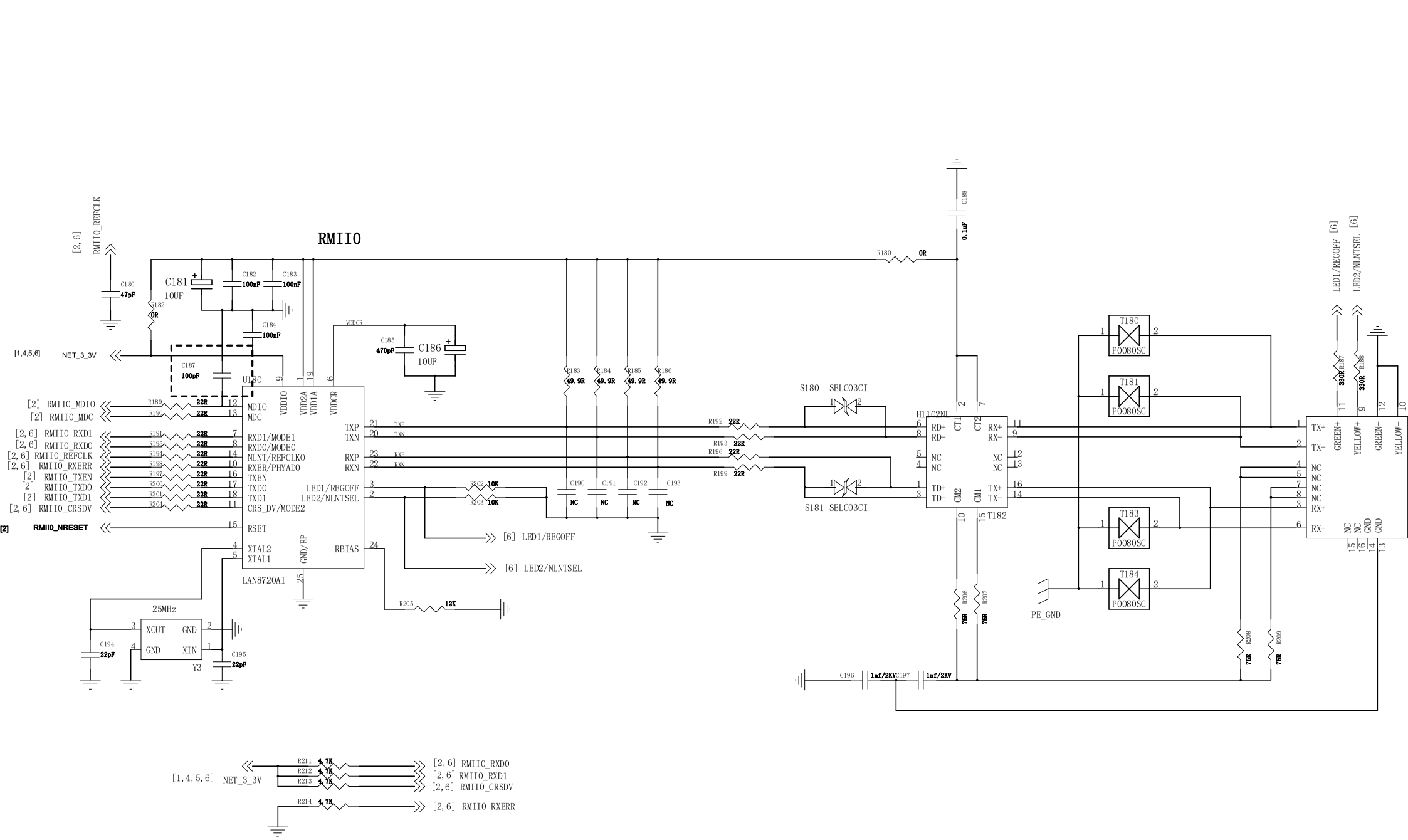
RMII0
[2,6] RMII0_REFCLK
C180 47pF
C181 10UF
C182 100nF
C183 100nF
C184 100nF
R182 0R
[1,4,5,6] NET_3_3V
C187 100pF
U180
LAN8720AI
25MHz
Y3
C194 22pF
C195 22pF
VDDCR
C185 470pF
C186 10UF
R183 49.9R
R184 49.9R
R185 49.9R
R186 49.9R
[2] RMII0_MDIO
[2] RMII0_MDC
[2,6] RMII0_RXD1
[2,6] RMII0_RXD0
[2,6] RMII0_REFCLK
[2,6] RMII0_RXERR
[2] RMII0_TXEN
[2] RMII0_TXD0
[2] RMII0_TXD1
[2,6] RMII0_CRSDV
[2] RMII0_NRESET
R189 22R
R190 22R
R191 22R
R195 22R
R194 22R
R198 22R
R197 22R
R200 22R
R201 22R
R204 22R
R202 10K
R203 10K
C190 NC
C191 NC
C192 NC
C193 NC
R205 12K
[6] LED1/REGOFF
[6] LED2/NLNTSEL
R180 0R
C188 0.1uF
R192 22R
R193 22R
R196 22R
R199 22R
S180 SELC03CI
S181 SELC03CI
H1102NL
T182
C196 1nf/2KV
C197 1nf/2KV
R206 75R
R207 75R
R208 75R
R209 75R
PE_GND
T180 P0080SC
T181 P0080SC
T183 P0080SC
T184 P0080SC
LED1/REGOFF [6]
LED2/NLNTSEL [6]
R187 330R
R188 330R
[1,4,5,6] NET_3_3V
R211 4.7K
R212 4.7K
R213 4.7K
R214 4.7K
[2,6] RMII0_RXD0
[2,6] RMII0_RXD1
[2,6] RMII0_CRSDV
[2,6] RMII0_RXERR

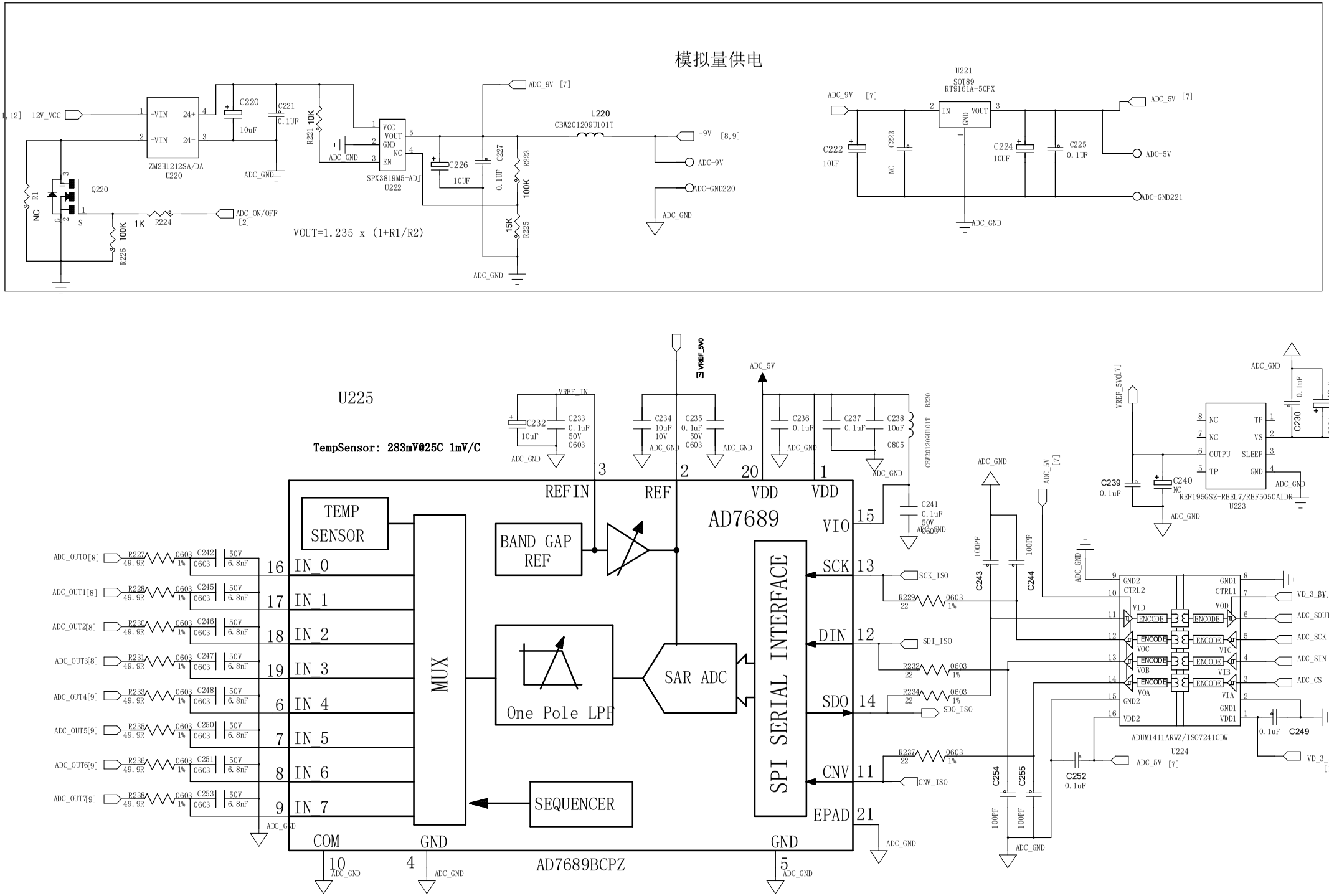
模拟量供电
[1,2,11,12] 12V_VCC
ZM2H1212SA/DA
U220
C220
10uF
C221
0.1UF
ADC_GND
R221 10K
SPX3819M5-ADJ
U222
C226
10UF
C227
0.1UF
R223
100K
R225
15K
ADC_9V [7]
L220
CBW201209U101T
+9V [8,9]
ADC-9V
ADC-GND220
Q220
R1
NC
R224
1K
R226
100K
ADC_ON/OFF [2]
VOUT=1.235 x (1+R1/R2)
U221
SOT89
RT9161A-50PX
C222
10UF
C223
NC
C224
10UF
C225
0.1UF
ADC_5V [7]
ADC-5V
ADC-GND221
U225
TempSensor: 283mV@25C 1mV/C
VREF_5V0
VREF_IN
C232
10uF
C233
0.1uF
50V
0603
C234
10uF
10V
C235
0.1uF
50V
0603
C236
0.1uF
C237
0.1uF
C238
10uF
0805
R220
CBW201209U101T
C241
0.1uF
50V
0603
AD7689
REFIN
REF
VDD
VIO
TEMP SENSOR
BAND GAP REF
MUX
SAR ADC
SPI SERIAL INTERFACE
SEQUENCER
One Pole LPF
IN_0
IN_1
IN_2
IN_3
IN_4
IN_5
IN_6
IN_7
COM
GND
EPAD
SCK
DIN
SDO
CNV
AD7689BCPZ
ADC_OUT0[8]
ADC_OUT1[8]
ADC_OUT2[8]
ADC_OUT3[8]
ADC_OUT4[9]
ADC_OUT5[9]
ADC_OUT6[9]
ADC_OUT7[9]
R227 49.9R
R228 49.9R
R230 49.9R
R231 49.9R
R233 49.9R
R235 49.9R
R236 49.9R
R238 49.9R
C242 6.8nF
C245 6.8nF
C246 6.8nF
C247 6.8nF
C248 6.8nF
C250 6.8nF
C251 6.8nF
C253 6.8nF
SCK_ISO
SDI_ISO
SDO_ISO
CNV_ISO
R229 22
R232 22
R234 22
R237 22
C243 100PF
C244 100PF
C254 100PF
C255 100PF
C252 0.1uF
U223
REF195GSZ-REEL7/REF5050AIDR
C239 0.1uF
C240 NC
C230 0.1uF
C231 10uF
L221
CBW201209U101T
U224
ADUM1411ARWZ/ISO7241CDW
C249 0.1uF
VD_3_3V [1, 2, 3, 7, 12]
ADC_SOUT [2]
ADC_SCK [2]
ADC_SIN [2]
ADC_CS [2]

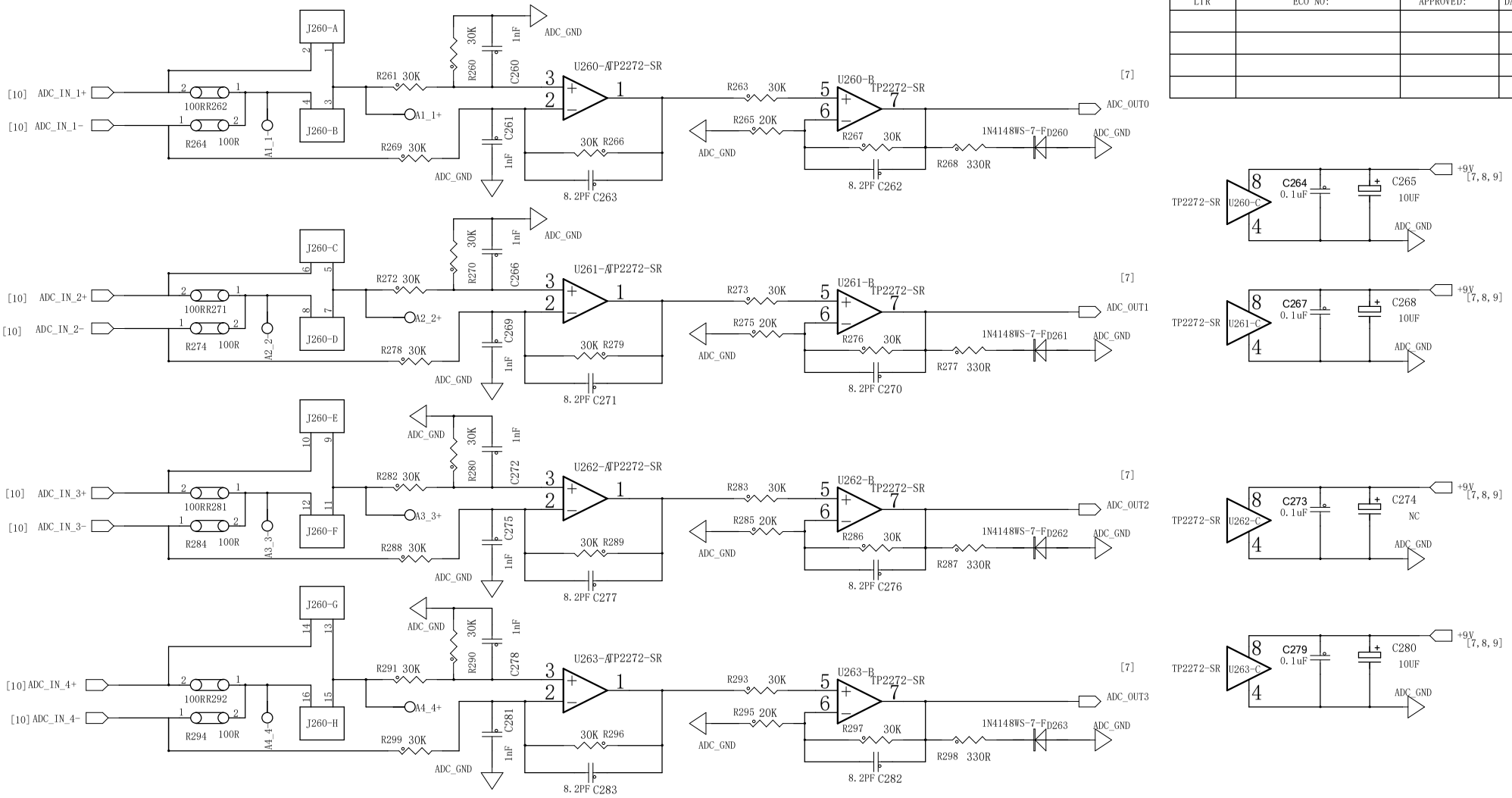

REVISION RECORD			
LTR	ECO NO:	APPROVED:	DATE:

DRAWN:	DATED:
CHECKED:	DATED:
QUALITY CONTROL:	DATED:
RELEASED:	DATED:

COMPANY:

TITLE:

CODE:	SIZE:	DRAWING NO:	REV:
	A3		

SCALE:

SHEET: 8 OF 12

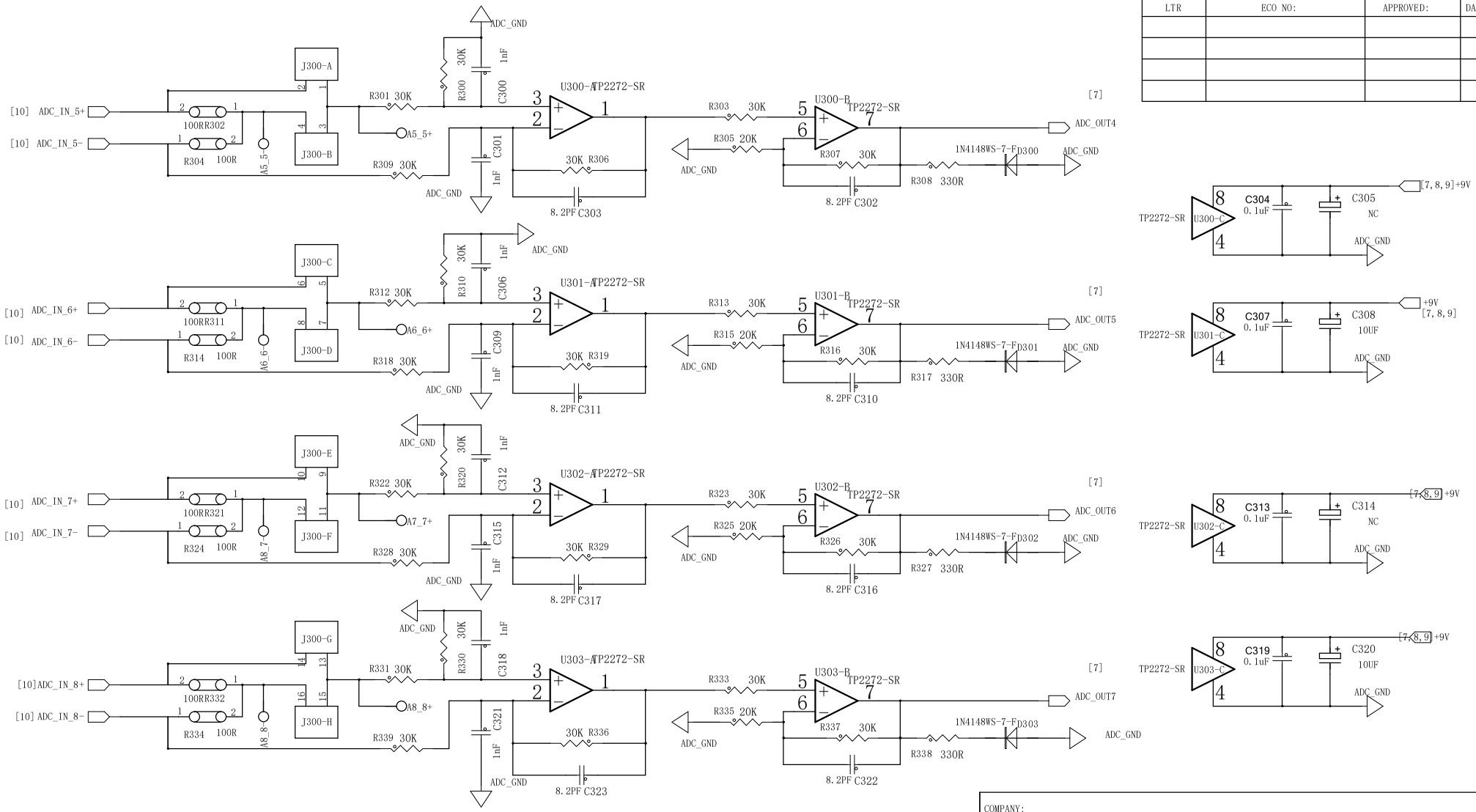

REVISION RECORD			
LTR	ECO NO:	APPROVED:	DATE:

DRAWN:	DATED:
CHECKED:	DATED:
QUALITY CONTROL:	DATED:
RELEASED:	DATED:

COMPANY:

TITLE:

CODE:	SIZE:	DRAWING NO:	REV:
	A3		

SCALE:

SHEET: 9 OF 12

REVISION RECORD			
LTR	ECO NO:	APPROVED:	DATE:

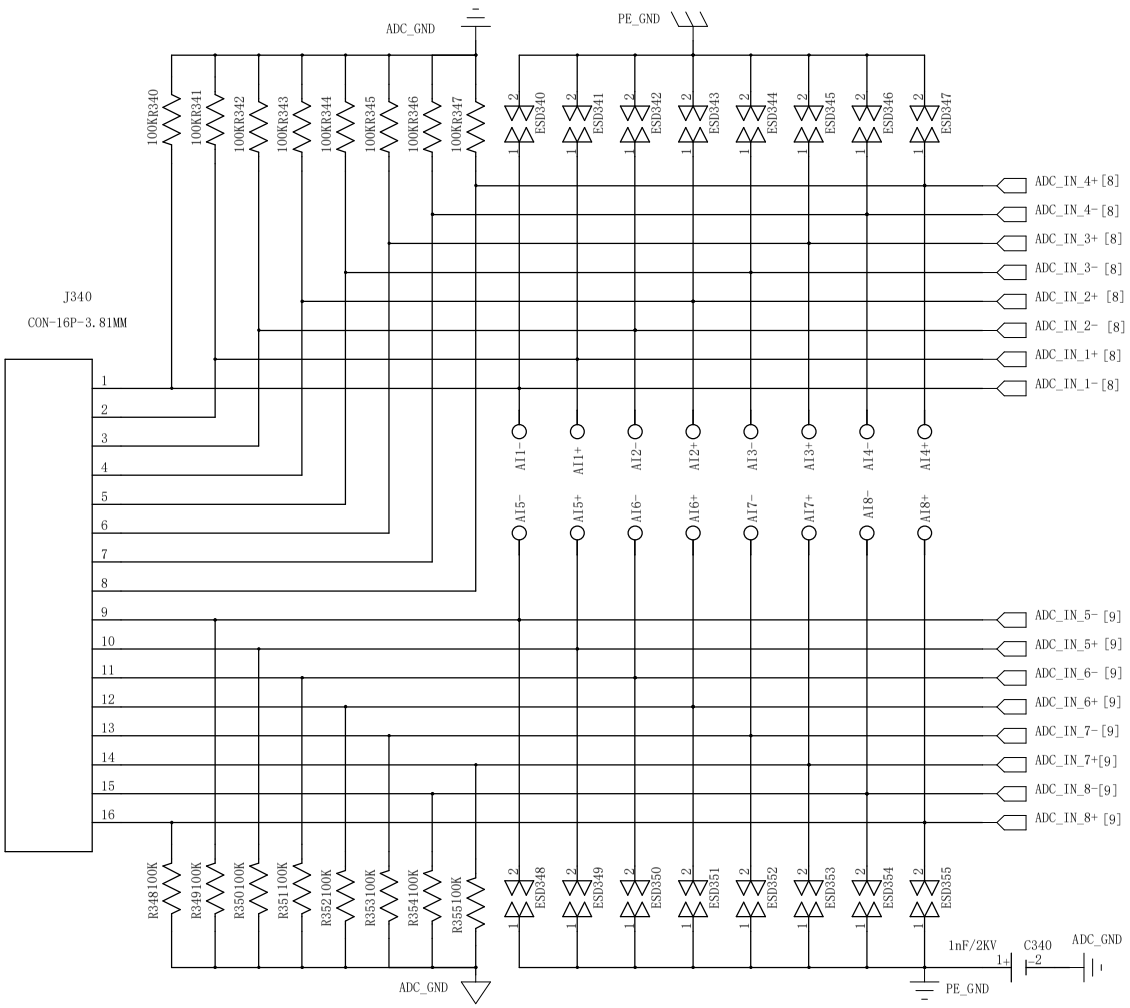

DRAWN:	DATED:
CHECKED:	DATED:
QUALITY CONTROL:	DATED:
RELEASED:	DATED:

COMPANY:

TITLE:

CODE:	SIZE:	DRAWING NO:	REV:
	A3		

SCALE:

SHEET: 10 OF 12

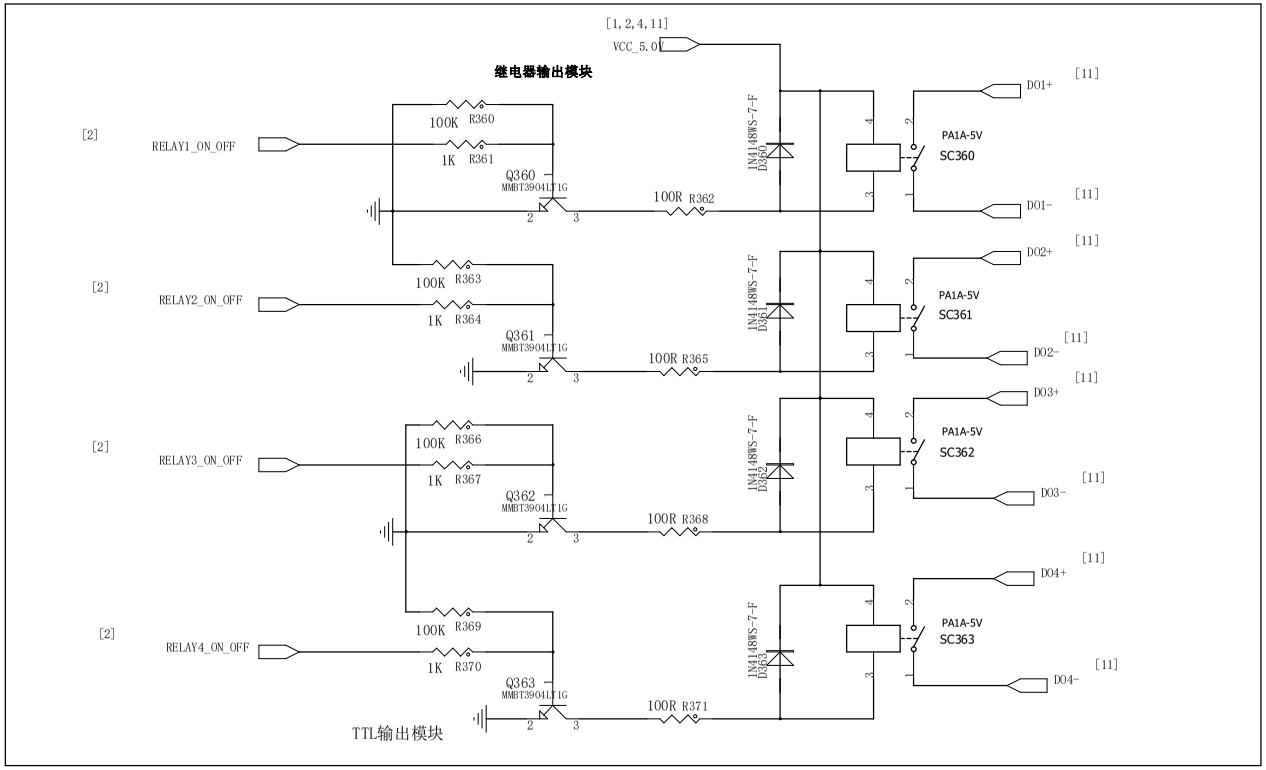

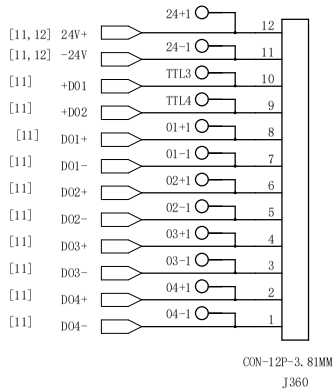

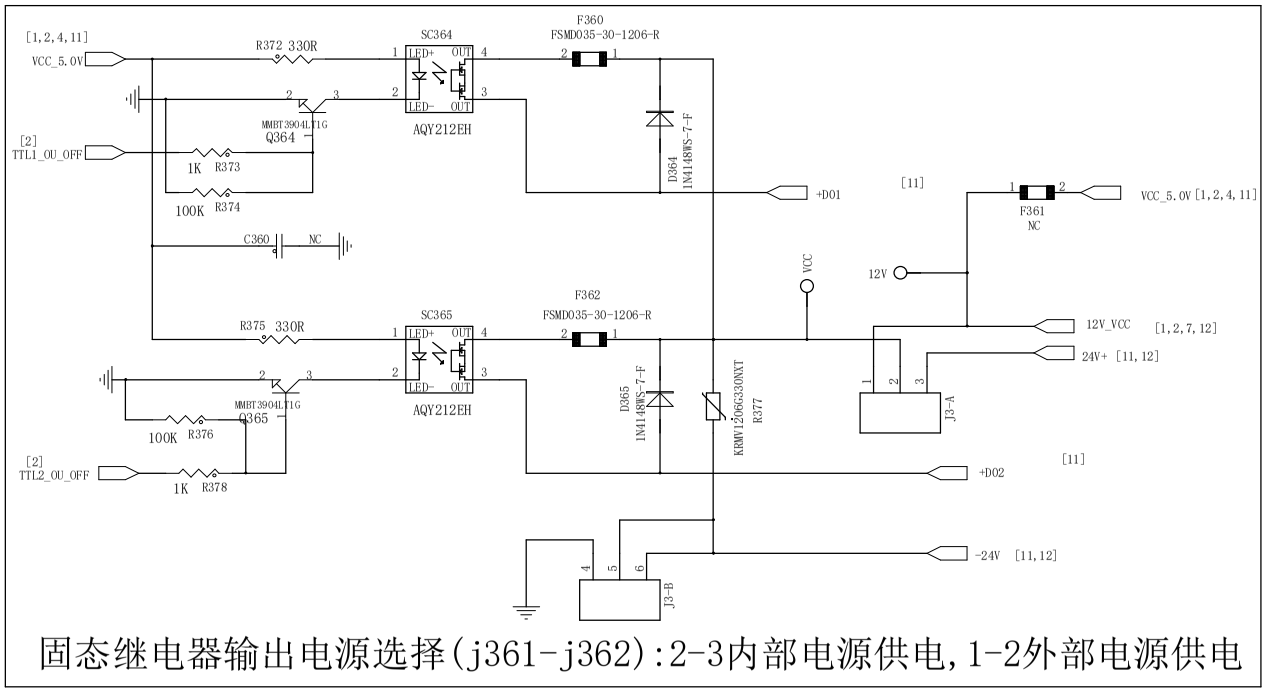

固态继电器输出电源选择(j361-j362):2-3内部电源供电,1-2外部电源供电

Title			
Size A3	Document Number		Rev ?
Date: Sunday, February 25, 2018	Sheet 11 of 12		

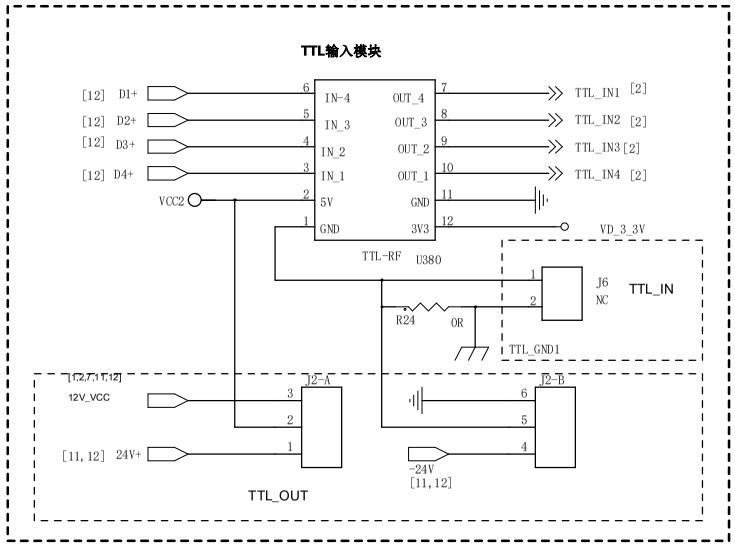

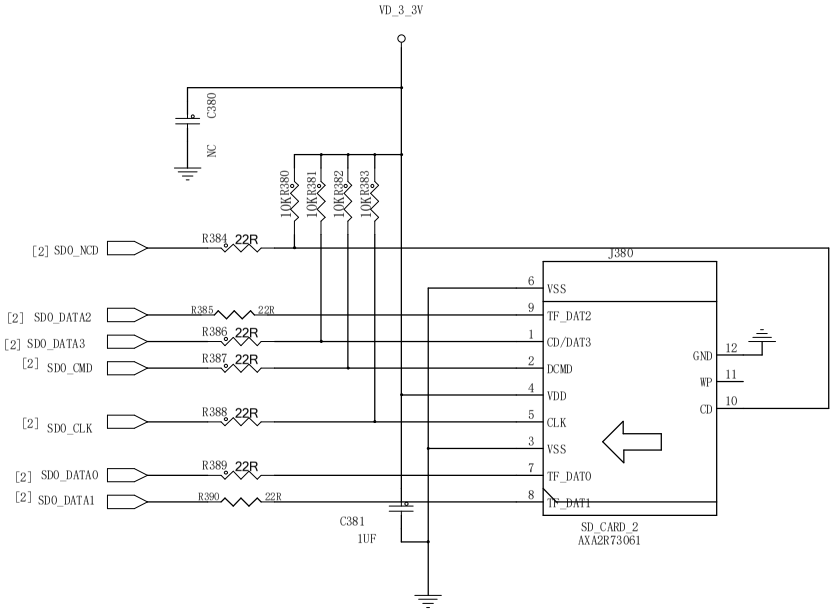

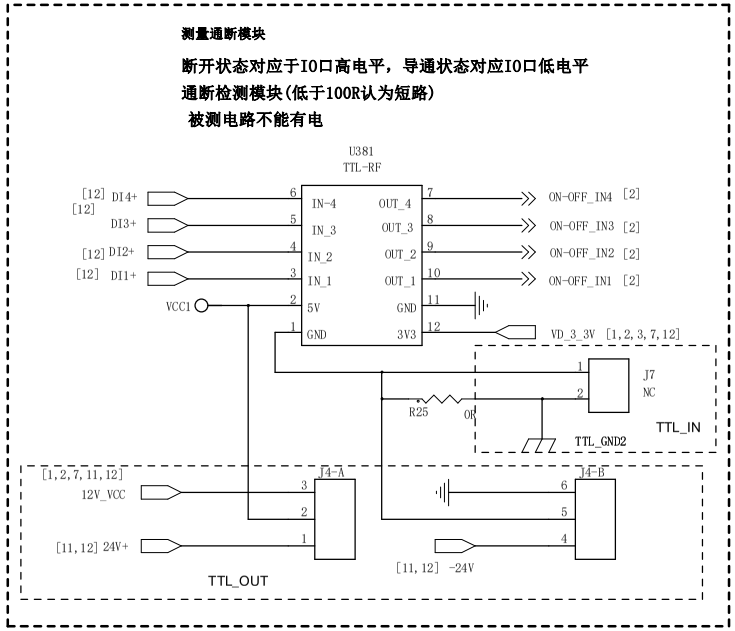

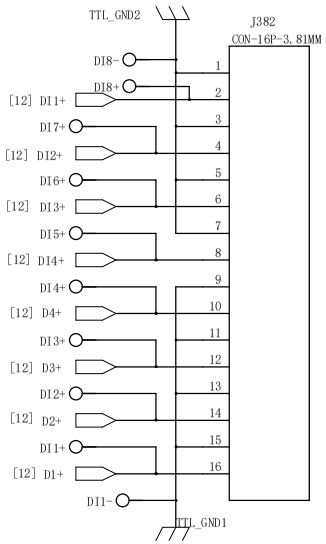

Title		
Size A3	Document Number	Rev ?
Date: Sunday, February 25, 2018	Sheet 12 of 12	