SOLAR PANNEL TRACKING SYSTEM

OBJECTIVE:

To design and implement a solar panel tracking system that maximizes the efficiency of solar energy capture by continuously orienting solar panels to face the sun throughout the day

ABSTRACT:

The solar panel tracking project utilizes Arduino and motors to optimize solar energy harvesting. The system automatically adjusts the orientation of solar panels to maximize energy collection throughout the day. Two light-dependent resistors (LDRs) monitor sunlight, enabling precise tracking. The Arduino processes data from the LDRs and controls the motors to position the solar panels for optimal sun exposure. This technology enhances energy efficiency by aligning panels with the sun's path, ensuring peak energy generation.

INTRODUCTION:

A solar tracker is a device for orienting a day lighting reflector, solar photovoltaic panel or concentrating solar reflector or lens toward the sun. Solar powered equipment works best when pointed at or near the sun, so a solar tracker can increase the effectiveness of such equipment over any fixed position, at the cost of additional system complexity. The tracker will enable the panel to follow the path of the sun and produce more power as it absorbs more sunlight. Concentrators, especially in solar cell applications, require a high degree of accuracy to ensure that the concentrated sunlight is directed precisely to the powered device.

Two LDR sensors are used both placed at opposite ends of the solar panels placed over a bridge tube connected with servo motor. We use two 9v batteries connected to servomotor and Arduino separately. The LDR sensors follow a decrease in resistance indicating the falloff light over them. As soon as any of the LDR sensors respond to the light the servo motor gets activated using the initial programming information present in the Arduino and rotates the bridge tube in the direction of that LDR which has responded to the light. If the light falls over the LDR sensors equally then there will be no movement in the bridge tube done by the servo motor. Hence, the solar panels get charged and provide us with an output i.e., illuminates a LED.

HARDWARE/SOFTWARE REQUIREMENTS:

Hardware Requirements :

- Arduino Board
- Servo Motor
- Light Dependent Resistors (LDRs)
- Resistor and Voltage Divider Circuit
- Mechanical Mounting
- Power Source
- Wiring and Connector

Software Requirements:

- Arduino IDE
- Servo Library

CONCEPTS/WORKING PRINCIPLE

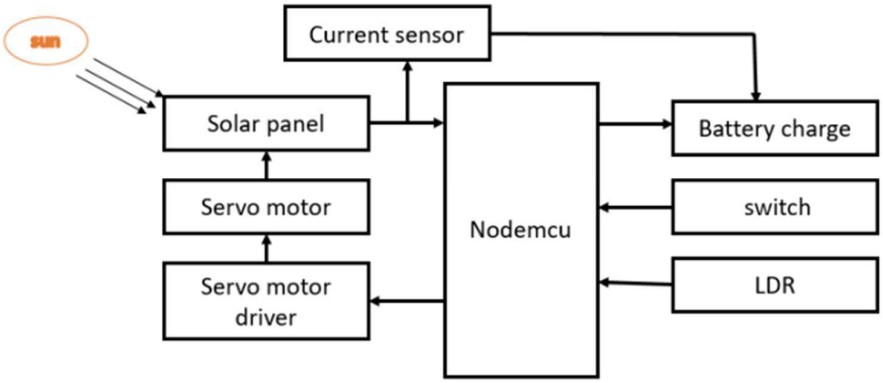

- **Light Detection**: The system uses LDRs to detect the intensity of light. LDRs are sensors whose resistance changes with varying light levels. Two LDRs are typically used, one on each side of the solar panel, to measure the amount of light coming from different directions.
- **Analog Reading**: The Arduino reads the analog values from the LDRs. These values represent the light levels on each side of the panel. When one side receives more light than the other, it implies that the sun is not directly facing the solar panel.
- **Data Processing**: The Arduino processes the analog readings from the LDRs. It calculates the difference in light intensity between the two sides. This difference indicates whether the solar panel is properly aligned with the sun or if it needs adjustment.
- **Control Algorithm**: A control algorithm is used to determine the optimal position for the solar panel based on the LDR data. The algorithm calculates how much the panel needs to move to face the light source more directly. It decides whether the panel should be adjusted and in which direction.
- **Servo Motor Control**: The Arduino sends control signals to the servo motor. The servo motor is responsible for physically adjusting the orientation of the solar panel. It can tilt the panel horizontally and vertically to track the sun's movement across the sky.
- **Continuous Tracking**: The system continuously monitors the LDR data and makes adjustments to the solar panel's position. As the sun moves throughout the day, the solar panel follows its path to maintain an optimal angle for maximum solar energy capture.
- **Energy Optimization**: By tracking the sun, the solar panel captures sunlight more efficiently and generates more electrical energy. This can significantly improve the overall energy output of a solar power system.

APPROACH/METHODOLOGY/PROGRAMS:

```
#include <Servo.h>

#include <Servo.h>

Servo horizontal; // horizontal servo
int servoh = 180;
int servohLimitHigh = 175;
int servohLimitLow = 5;
// 65 degrees MAX

Servo vertical; // vertical servo
int servov = 45;
int servovLimitHigh = 60;
int servovLimitLow = 1;

// LDR pin connections
// name = analogpin;
int ldrlt = A0; // LDR top left - BOTTOM LEFT <--- BDG
int ldrrt = A3; // LDR top right - BOTTOM RIGHT
int ldrld = A1; // LDR down left - TOP LEFT
int ldrrd = A3; // LDR down right - TOP RIGHT

void setup() {
  horizontal.attach(9);
  vertical.attach(10);
  horizontal.write(180);
  vertical.write(45);
  delay(2500);
}

void loop() {
  int lt = analogRead(ldrlt); // top left
  int rt = analogRead(ldrrt); // top right
  int ld = analogRead(ldrld); // down left
  int rd = analogRead(ldrrd); // down right
  int dtime = 10;
  int tol = 90; // dtime = difference time, tol = tolerance
  int avt = (lt + rt) / 2; // average value top
  int avd = (ld + rd) / 2; // average value down
  int avl = (lt + ld) / 2; // average value left
  int avr = (rt + rd) / 2; // average value right
  int dvert = avt - avd; // check the difference of up and down
  int dhoriz = avl - avr; // check the difference of left and right

  if (-1 * tol > dvert || dvert > tol) {
    if (avt > avd) {
      servov = ++servov;
```

```
    if (servov > servovLimitHigh) {
      servov = servovLimitHigh;
    }
  } else if (avt < avd) {
    servov = --servov;
    if (servov < servovLimitLow) {
      servov = servovLimitLow;
    }
  }
  vertical.write(servov);
}

if (-1 * tol > dhoriz || dhoriz > tol) {
  if (avl > avr) {
    servoh = --servoh;
    if (servoh < servohLimitLow) {
      servoh = servohLimitLow;
    }
  } else if (avl < avr) {
    servoh = ++servoh;
    if (servoh > servohLimitHigh) {
      servoh = servohLimitHigh;
    }
  }
  horizontal.write(servoh);
}

delay(dtime);
}
```

FLOWCHART:

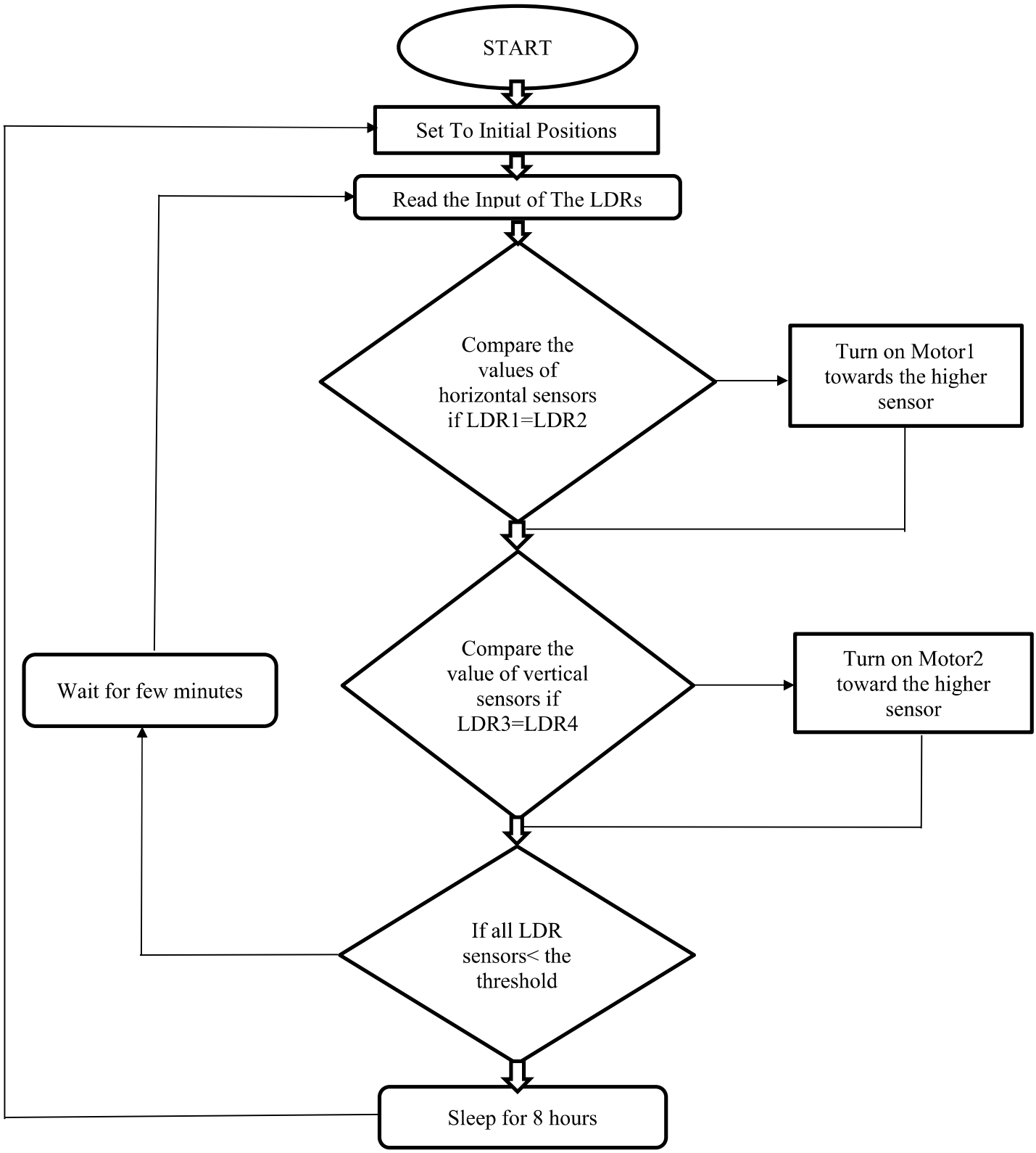
START
Set To Initial Positions
Read the Input of The LDRs
Compare the values of horizontal sensors if LDR1=LDR2
Turn on Motor1 towards the higher sensor
Compare the value of vertical sensors if LDR3=LDR4
Turn on Motor2 toward the higher sensor
Wait for few minutes
If all LDR sensors< the threshold
Sleep for 8 hours

OUTPUT:

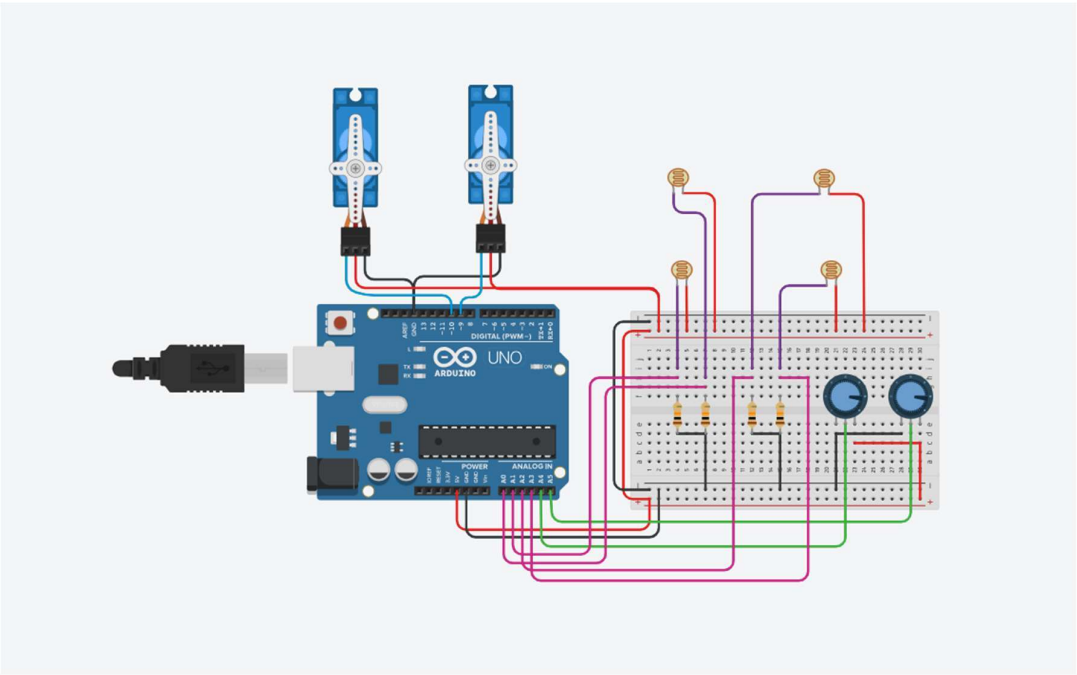
UNO
ARDUINO
DIGITAL (PWM~)
POWER
ANALOG IN

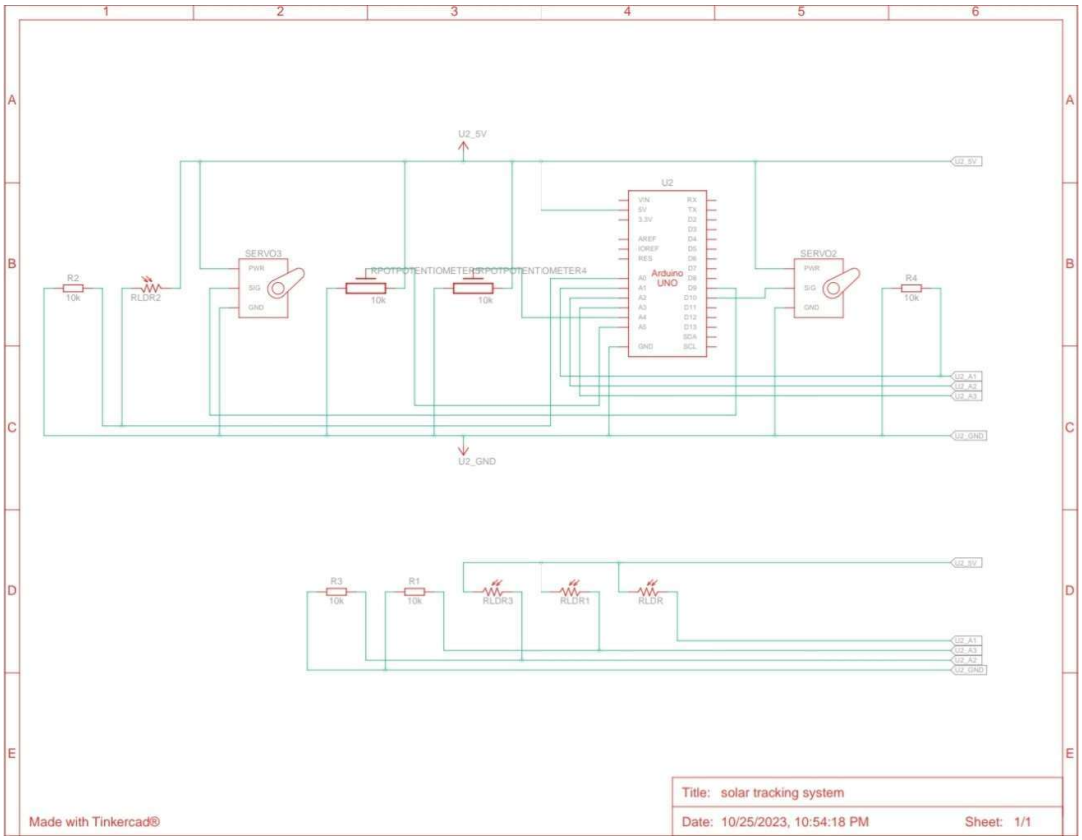
U2_5V
U2
Arduino UNO
SERVO3
SERVO2
R2
10k
RLDR2
RPOTPOTENTIOMETER3
RPOTPOTENTIOMETER4
R4
U2_A1
U2_A2
U2_A3
U2_GND
R3
R1
RLDR3
RLDR1
RLDR
Made with Tinkercad®
Title: solar tracking system
Date: 10/25/2023, 10:54:18 PM
Sheet: 1/1

CONCLUSIONS:

The solar tracking panel project demonstrates the efficiency improvement of solar energy harvesting through an active tracking system. The system's advantages outweigh its disadvantages, making it a valuable technology for sustainable energy production.

REFERENCES:

https://www.scirp.org/html/1-6801288_61480.htm
https://circuitdigest.com/microcontroller-projects/
https://www.tinkercad.com/things/gKoXewBiapD-solar-tracking-system