SAE®
SAEINDIA

PROMETHEANS

OLD TEAM

FATEH 2013
REG ID. 67988
ENDURANCE RANK: 11TH
OVERALL RANK: 31TH

NEW TEAM ID: 15267

MAHARISHI MARKANDESHWAR ENGINEERING COLLEGE

RULEBOOK

1. Drivers must be able to exit on either side of the vehicle within 5 sec.
Firewall must separate the engine & fuel tank from the cockpit & 0.5mm thick.
2. There must be accurate documentation to substantiate the costs of the parts & materials.
3. Roll cage must be designed & fabricated to prevent failure of cage's integrity & Driver's body must have at least 3" clearance.
4. Refueling must be done with engine shut-off & the driver out of the vehicle & with fire extinguisher.Refueling on the track will lead to disqualification.
5. A safety harness of at least 5 points must be worn by the drivers.
All belts must join with a single metal-to-metal quick release lever.
6. The roll cage must have no exposed sharp edges.
7. In the vehicle,there must be 2 kill switches.The cockpit Kill switch must be within easy reach of the driver & switches must not de-energize the brake light.
8. Fuel tank must be equipped with splash shields to prevent fuel from being poured.
9. Engine is restricted to Briggs & Stratton OHV Intek model,blueprinting is prohibited.Engine governer setting must not exceed 3800 RPM.
10. All rotating parts such as chain,axle,sprocket must be shielded & finger guarded.

VEHICLE SPECIFICATIONS

FATEH (2012 – 13) Last Year	PROMETHEANS (2014 – 15) (PVC Pipe Model)
	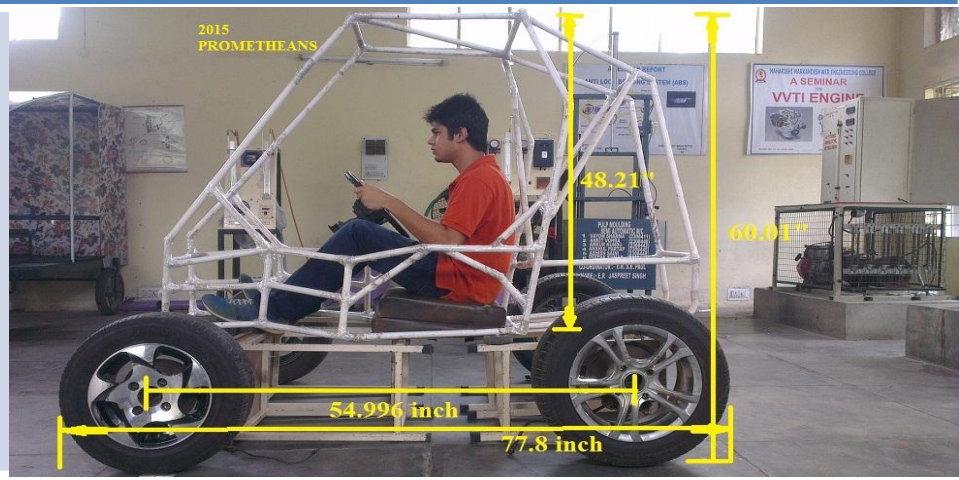

❖ **Dimensions / Capacities:**	FATEH (2012 – 13) Last Year	PROMETHEANS (2014 – 15)
Overall Length:	89.81 inch	77.8 inch
Wheelbase:	64.81 inch	54.996 inch
Track Width:	Front : 51.10 inch Rear : 49 inch	Front : 48 inch Rear : 47 inch
Weight without Driver	270 kg	240 kg
Weight Distribution of	35:65	40:60
Ground Clearance:	9.6 inch	11.8 inch
❖ **Suspension and Steering:**		
Front Suspension:	Double wishbone unequal length, parallel (A-arm) .	Double wishbone unequal length, non parallel (A-arm) 9.21 inch (Travel)
Rear Suspension:	Double wishbone unequal length, on parallel (H-arm) .	Trailing arm with two rear links, 8.34 inch (Travel)

	FATEH (2012 – 13) Last Year	PROMETHEANS (2014 – 15)
C.G. Height:	15.81 inch	15.5 inch
Steering System	Centered Rack and pinion, Steering Ratio of 11:1	Centered Rack and pinion, Steering Ratio of 11:1
❖ **Engine:**		
Common Engine:	Briggs & Stratton 305cc, 10Hp	Briggs & Stratton 305cc, 10Hp
❖ **Drivetrain:**	Polaris P90 CVT with Gearbox of Mahindra Alfa Champion giving drive to Differential.	Bullet chain and sprocket giving drive to Gearbox of Mahindra Alfa Champion with Locked Spool.
❖ **Brake:**	Tandem master cylinder, apache RTR 180 rear disc Cutting brakes with hand operated master cylinder	Tandem master cylinder , apache RTR 180 rear disc.
❖ **Tires /Wheels:**	Front : 24*8*12 (Mud and Snow tire) Rear : 24*8*12 (Mud and Snow tire)	Front : 23*7*12 (Mud and Terrain Tire) Rear : 23*8*12 (Mud and Terrain Tire)
❖ **Materials:**	AISI 1018 Steel Normalized	AISI 4130 Steel Normalized

Isometric View

FATEH 2012-13

PROMETHEANS 2014-15

Front View

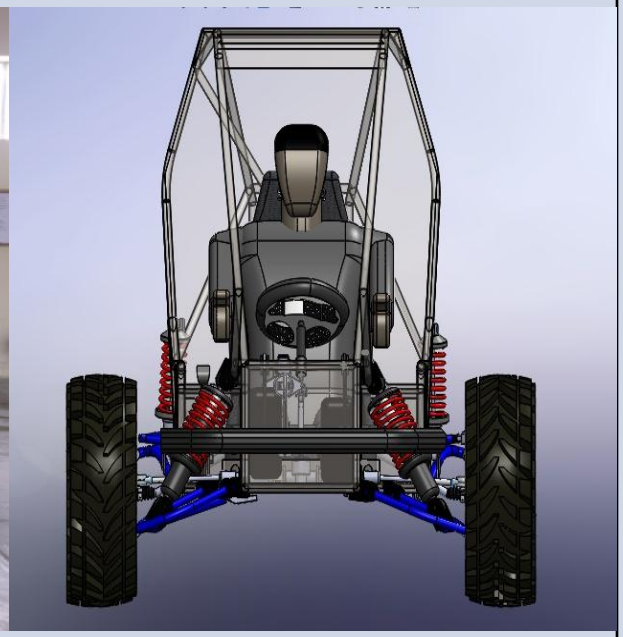

Top View

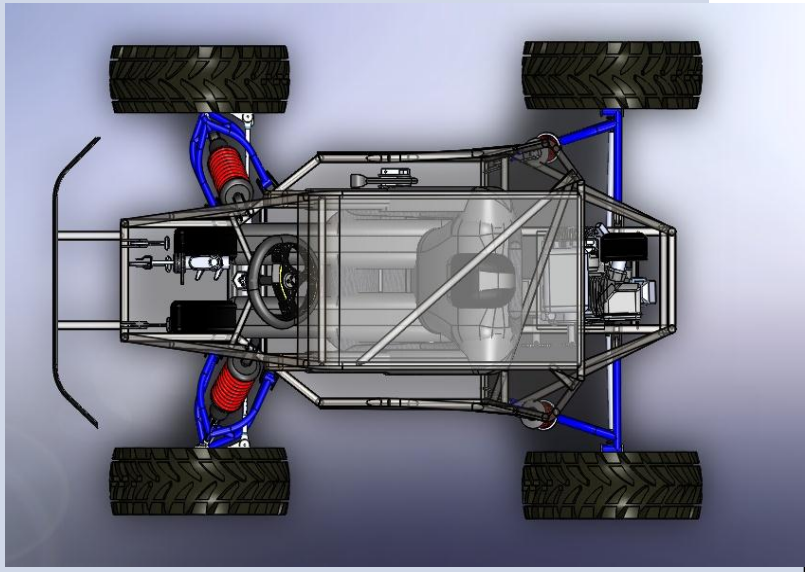

Side View

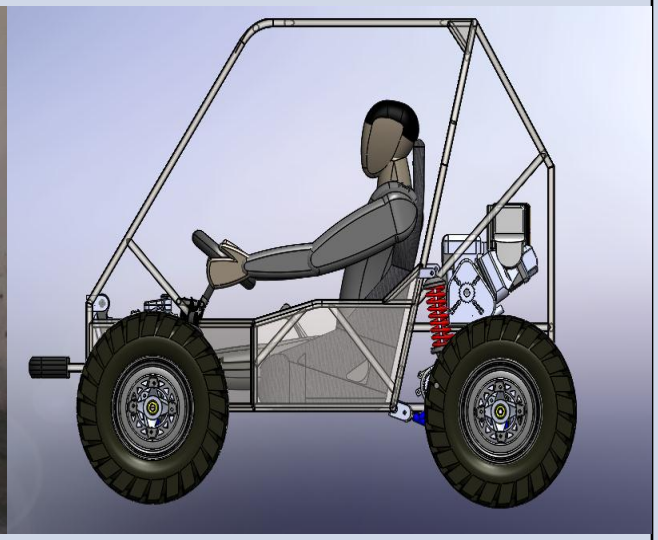

Back View

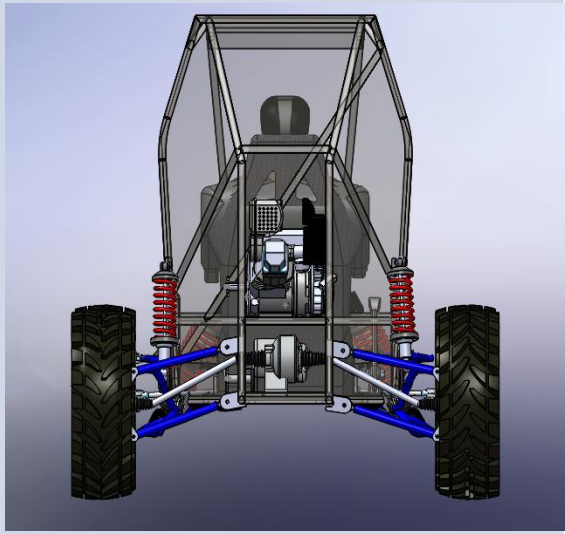

ROLL CAGE

Design consideration: To design a safe and functional vehicle based on a rigid and torsion-free roll cage and provide reliable mounting locations for components.

FATEH (2012-13)

Ergonomics

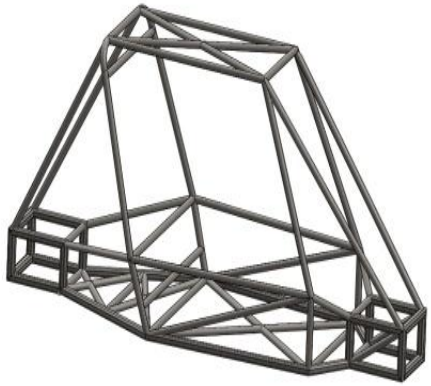

Wt. of
Roll Cage : 43.7kg
Material : AISI 1018
Length : 87.32 inch
Height : 51.50 inch
Cockpit :--
Length: 43.21 inch
Breadth :32.31 inch

PROMETHEANS (2014-15)

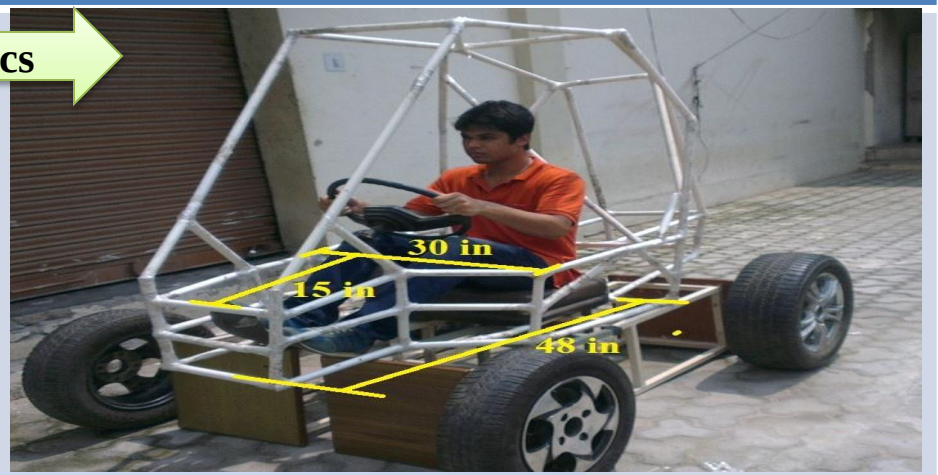

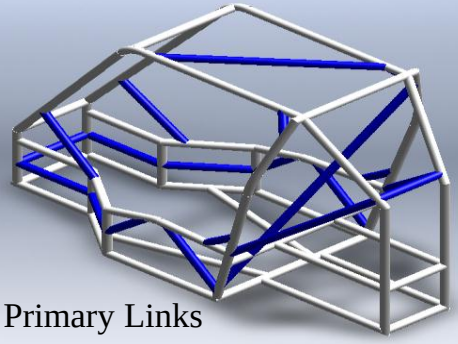

- Primary Links
– Secondary Links

Wt. of
Roll Cage : 36.8 kg
Material : AISI 4130
Length : 73 inch
Height : 48.21 inch
Cockpit :--
Length: 48 inch
Breadth :30 inch

Lesson learned	Improvements
Don't design the roll cage first and then make the rest to fit.	Extensive research on each main component of vehicle
Reduce the weight of roll cage	To Reduce overall length of our Roll Cage.
Un-accurate measurements can lead to overall change in dim.	Less use of bends reduces the chance of error.

Design Optimization

Material Removed Material Added

FEA	Design Iteration	New FEA	%age Change	
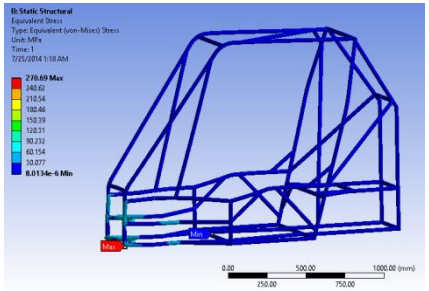	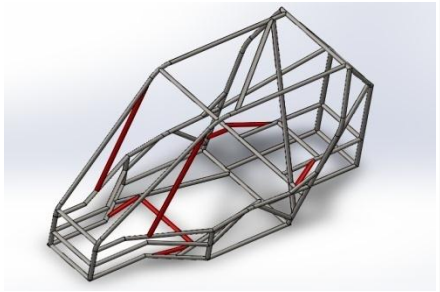	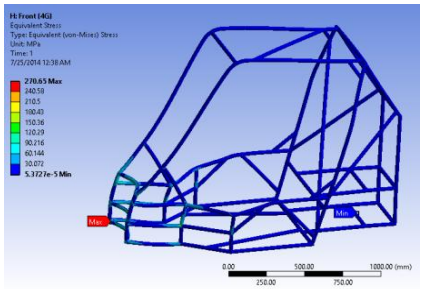	Weight	Stress
			$\frac{36.18 - 32.80}{36.18}$ = 9.3 % (Decrease)	$\frac{270.69 - 270.65}{270.69}$ = 0.014 % (Decrease)
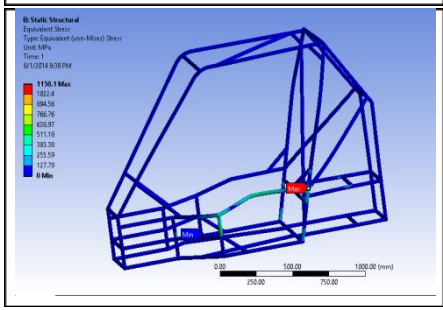	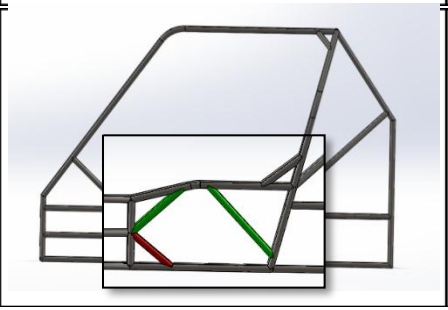	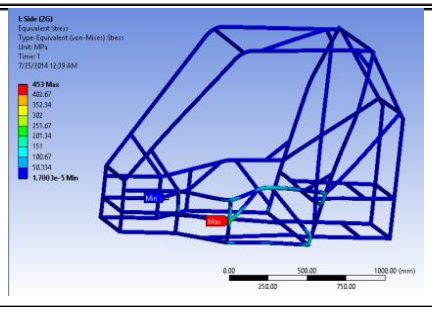	$\frac{36.18 - 34.67}{36.18}$ = 3.4 % (Increase)	$\frac{1150.1 - 453}{270.69}$ = 60 % (Decrease)

Front Impact	Rear Impact	Side Impact
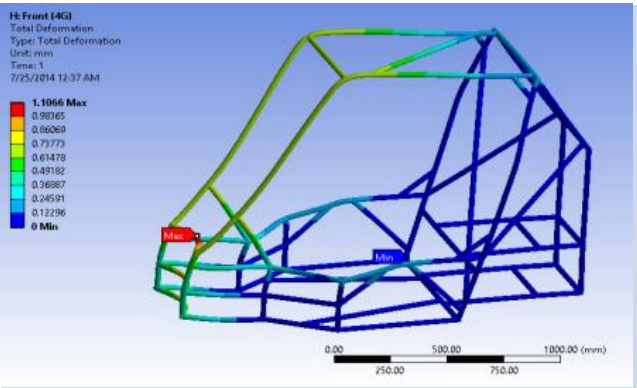	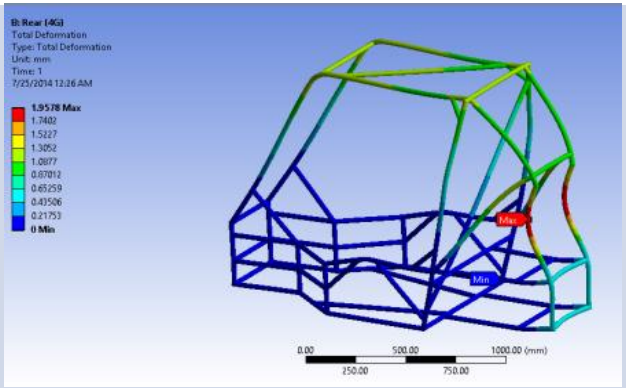	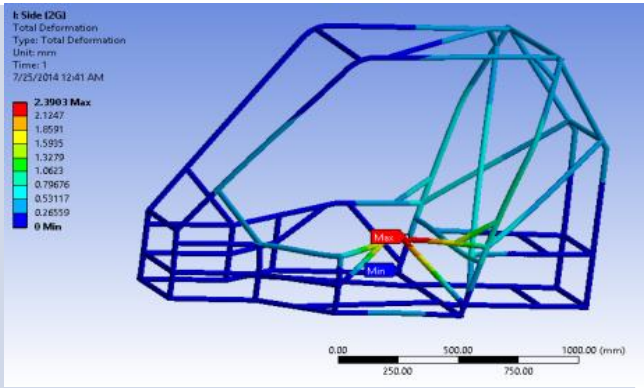

	Front Impact	Rear Impact	Side Impact
Load Applied	4G	4G	2G
Max. Stress	270.65 MPa	313.29 MPa	453 MPa
Max. Deformation	1.11 mm	1.96 mm	2.39 mm
FOS	1.69	1.46	1.01

Front Bump

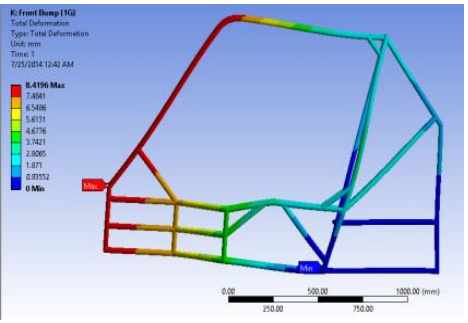

Rear Bump

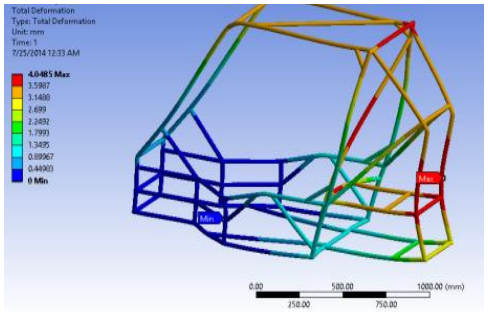

Front Torosional Rigidity

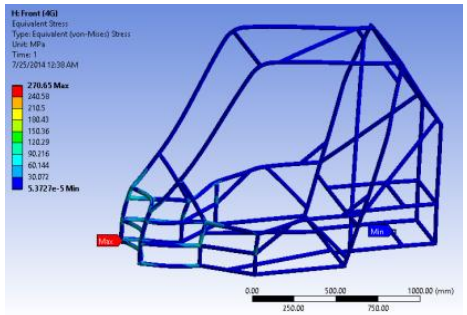

Rear Torosional Rigidity

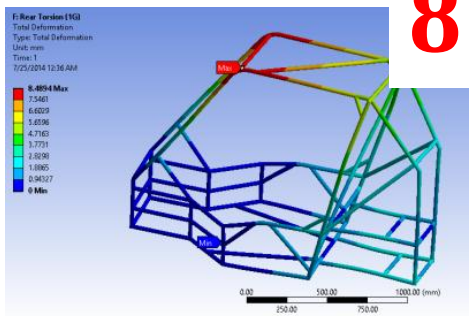

	Front Bump	Rear Bump	Front Torosional Rigidity	Rear Toroional Rigidity
Load Applied	2 G	2 G	1 G	1 G
Max. Stress	260.55 MPa	356.12 MPa	296.89 MPa	372.69 MPa
Max. Deformation	8.42 mm	4.05 mm	3.77 mm	8.49 mm
FOS	1.76	1.29	1.54	1.23

Front Roll-Over

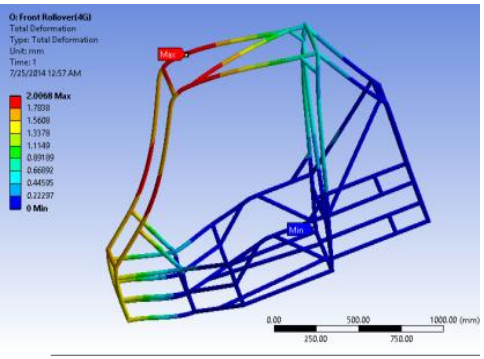

Rear Roll-Over

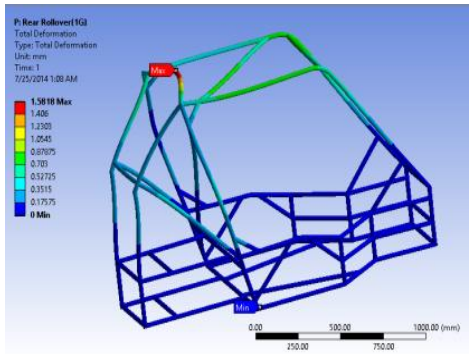

Side Roll-Over

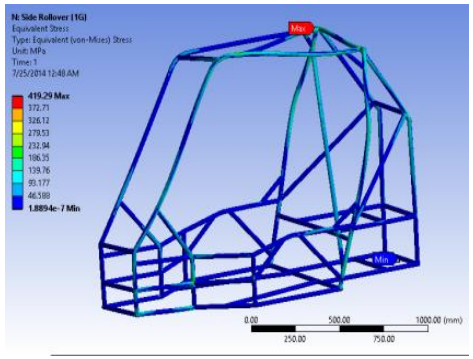

Modal Analysis

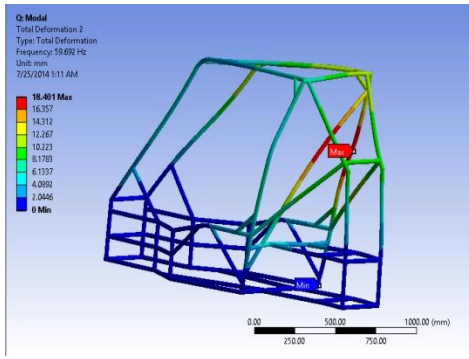

	Front Roll-Over	Rear Roll-Over	Side Roll-Over	Modal Analysis	
Load Applied	2 G	2 G	2 G	Frequency Range:	0 to 100 Hz
Max. Stress	276.34 MPa	184.19 MPa	419.29 MPa	Max. Deformation :	18.04 mm
Max. Deformation	2.00 mm	1.58 mm	1.26 mm		
FOS	1.66	2.49	1.09		

FRONT SUSPENSION

OBJECTIVE: To obtain reliable, comfort ride | **METHOD: SLA suspensions** | **RESULT: Roll moment is 218.78 N**

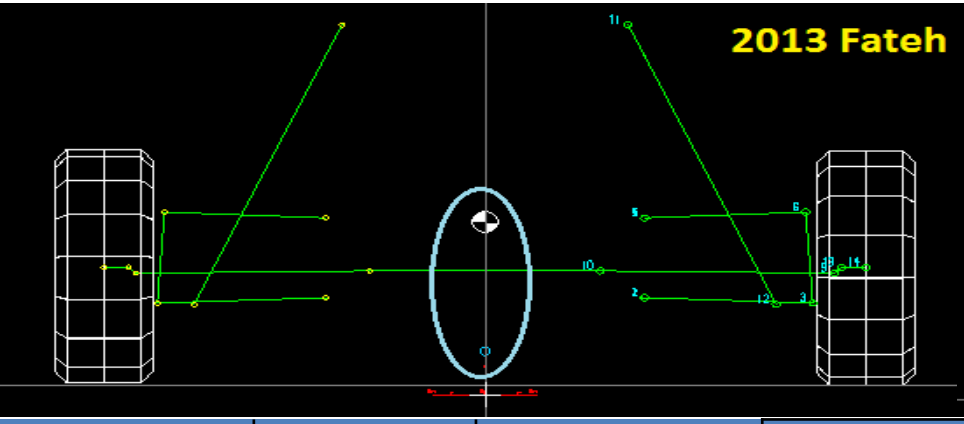

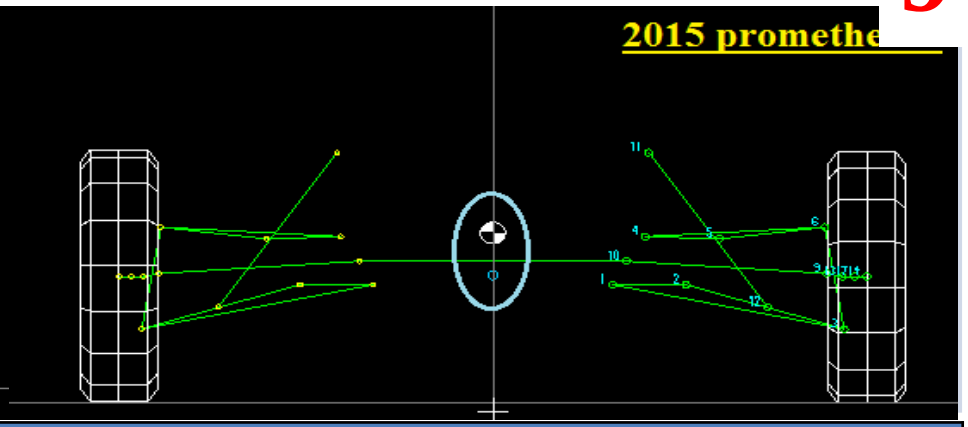

Parameters	Fateh (2013)	Prometheans (2015)
Type of Suspension	Parallel double-wishbone	Non Parallel double wishbone A-arm
	Tata Indica	Kawasaki Prarie
Spring Rate	14.81 N/mm	22.93 N/mm
C. G Height	15.83 inch	15.52 inch
Roll center height	3.259 inch	11.65 inch
Sus. free L	27.5 inch	16 inch
Caster angle	0.34°	6.2°
Kingpin angle	3.67°	9.31°
Roll moment	880.76 Nm	218.78 Nm
Camber	camber gain is (-2.1)deg.	camber gain is (-6.1)deg.

(2013 Fateh) Dynamic Behavior comparison (2015)

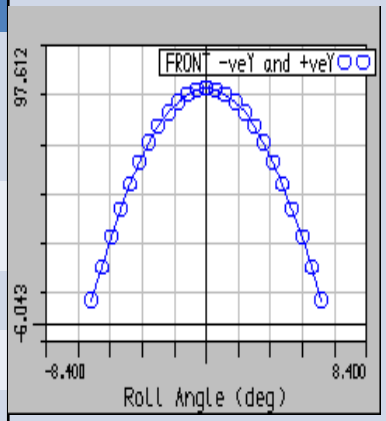

Distance between roll center and C.G is increasing with Roll angle which results in large rolling moment.

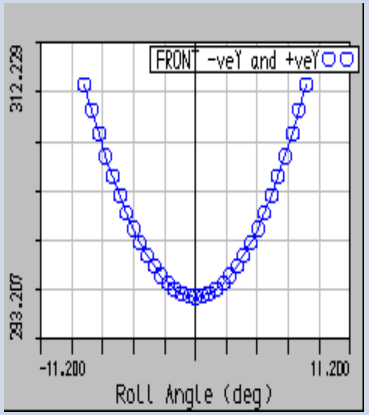

Distance b/w roll center and C.G decreases with roll angle which result in less rolling moment.

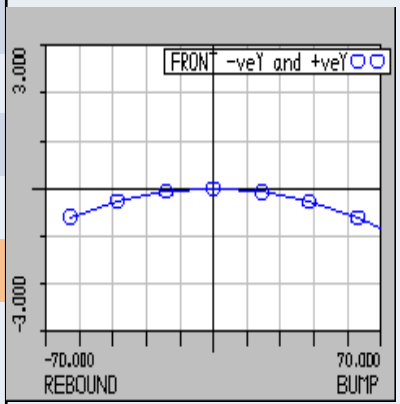

At 4inch bump travel, toe change was (-1.4) deg.

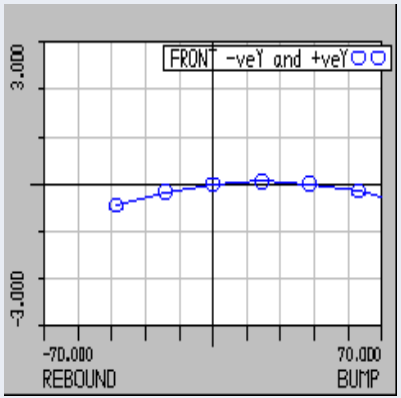

AT 4inch bump travel, toe change will be just(-0.6) deg.

REAR SUSPENSIONS

Fateh (2013)	Prometheans (2015)
	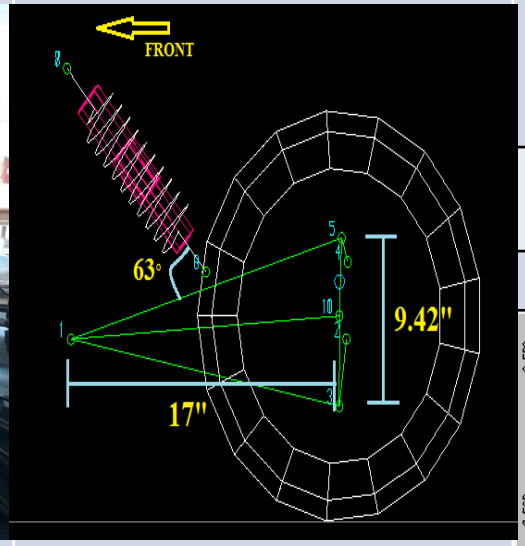

Problem occurred in 2013	Amendments done
Large distance between C.G and roll center increased roll moment i.e.	Roll moment is kept very low to have better cornering effects i.e.
Bump steer cause bad steering	Main focus to reduce bump steer.
Susp. weight was 8.5 kg	Light weight susp. 4 kg
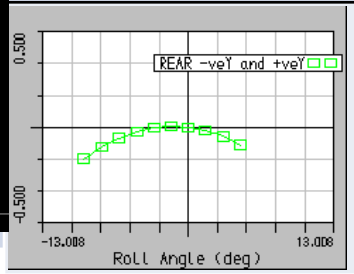 At 10° Roll, camber gain negligible	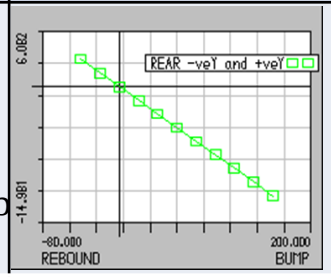 At 7.87in of bump, camber gain in (-14.981°

Parameters	Fateh (2013)	Promethean (2015)
Type of suspension	Parallel double-wishbone	TRAILING ARM WITH REAR LINKS
Difference b/w roll center and C.G.	13.28 inch	2.38 inch
Anti-Dive	5.00E-01 %	40.06 %
Ant-Squat	8.42 %	71.09 %
Knuckle length	8.21 inch	9.42 inch
Suspension free length	27.5 inch	16.5 inch

Mounting arms at 90°, Increases the chance of bending. So mounting of suspension at 14.6° with longitudinal

- Increases FOS
- Maximize traction.

FEA

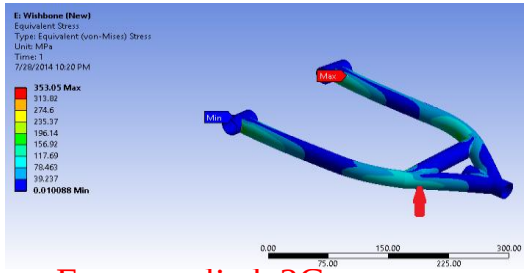

Force applied: 2G
Max stress: 353.05 Mpa

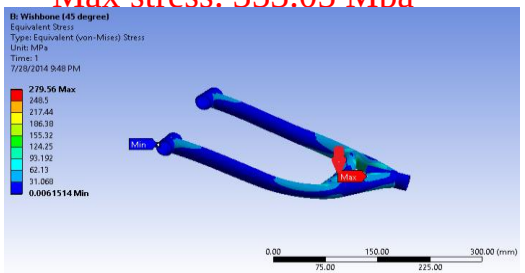

Force applied: 2G
Max Stress: 279.56 Mpa

Steering System

OBJECTIVE	METHOD	RESULT
To turn the vehicle effectively for maneuvering & sharp turns	Positive Ackermann Geometry with Rack & Pinion gears	Minimum Turning Radius is 7.684 feet with steering ratio 11:1 and slip angle comes out to be 2.49°

SPECIFICATIONS

Parameters	**Fateh (2013)**	**Promethean (2015)**
Steering Type	Rack & Pinion (Maruti 800)	Rack & Pinion (Maruti 800)
Steering Ratio	11:1	11:1
Max. Turning Angle	40°(inner) 30.23°(outer)	40°(inner) 25.84°(outer)
Turning Radius	11.42 feet	7.684 feet
Steering Arm Length	4 inch	3.5 inch
Length of Rack	0.694 feet	1.083 feet
Tie Rod Length	1.02 feet	1.02 feet
Slip Angle	Front = 3.76° Rear = 3.54°	Front = 2.55° Rear = 2.44°
Ackermann Angle	15°	25.38°

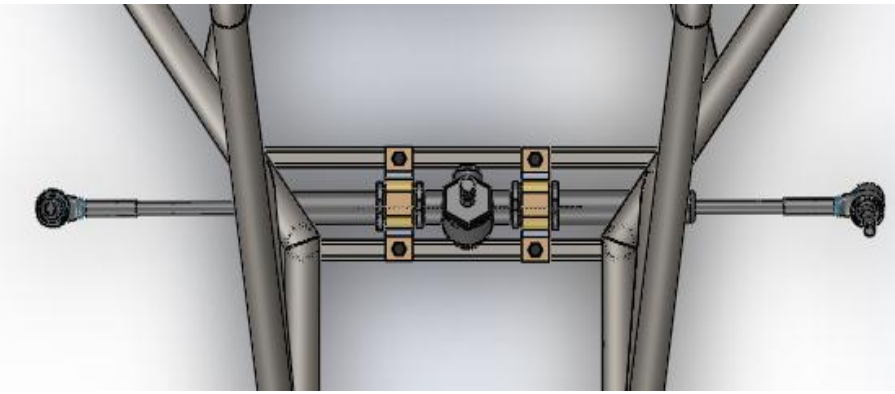

- Top view of steering unit

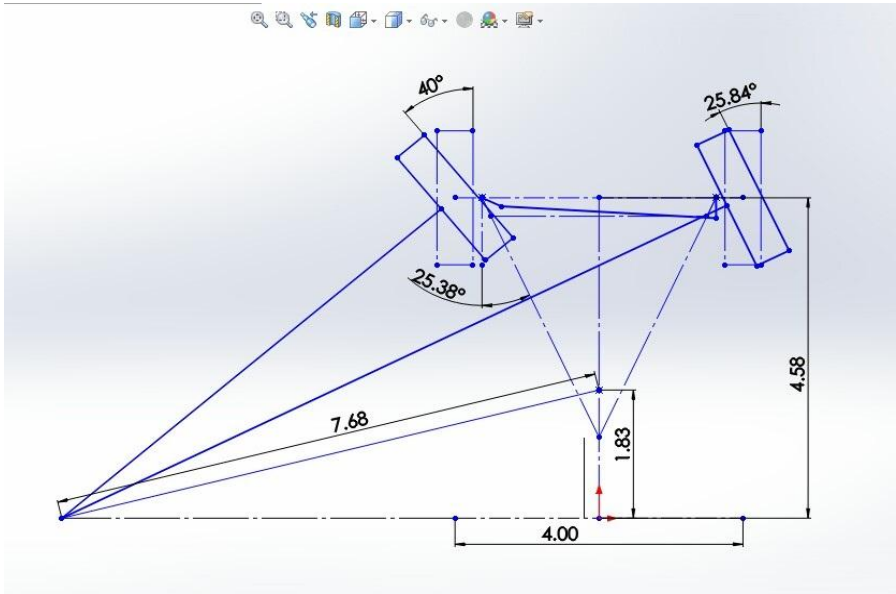

- Steering Geometry (in feet)

Problems faced in Fateh 2013

• Last time the mounting of steering was weak so it broke out in the middle of the race

Resolving method for Prometheans 2015

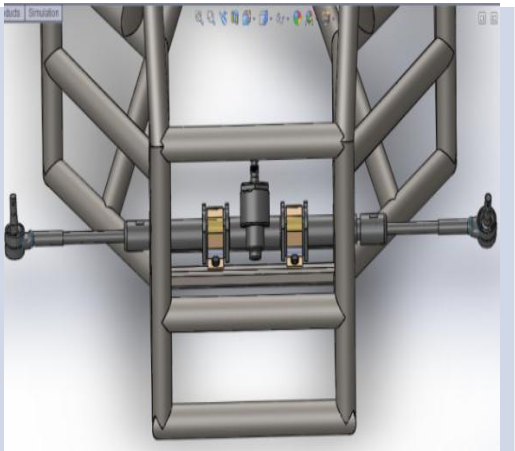

• This time we will clamp the steering as visible which is much stronger & efficient

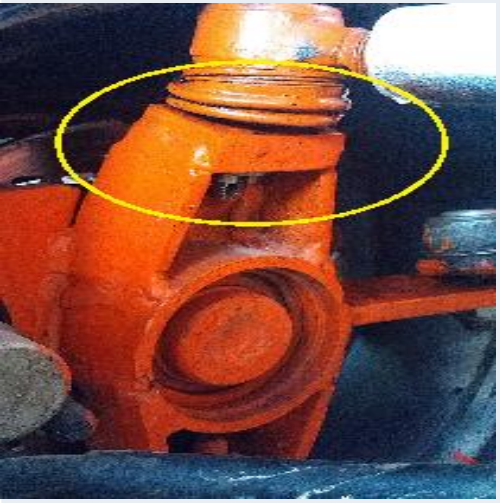

• Last year the Knuckle used of 6 mm thick strip which had much weight.

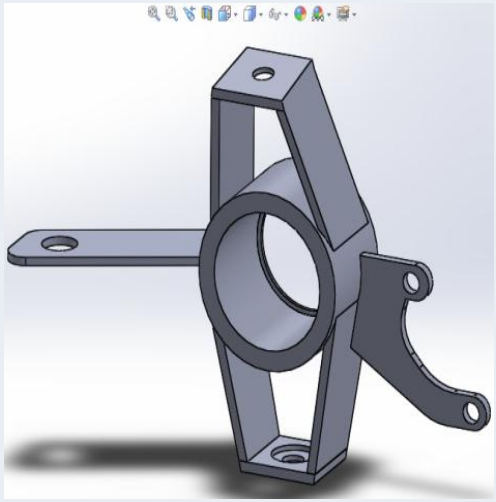

• We have tried our best to design strong & light weight knuckle with 4 mm thick bars

Abrupt wearing of tyres

•Last time due to excess Ackerman geometry and a little –ve camber ,there was uneven wear of the tyres

• this time to resolve this we will be using 75% Ackerman geometry and zero camber

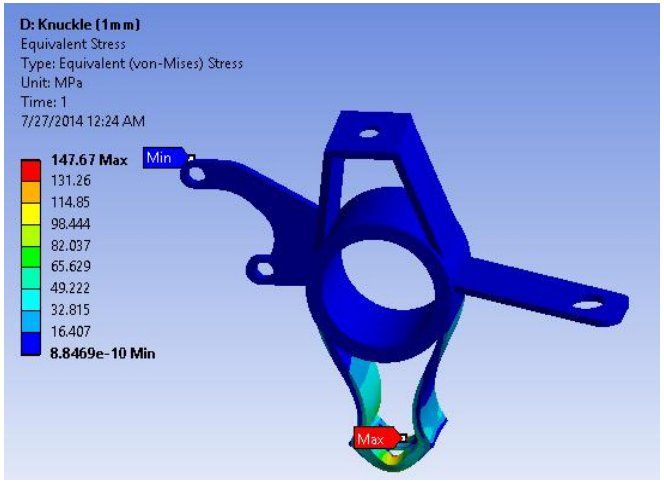

•IF VEHICLE LANDS ON ONE WHEEL
•Max load: 6200N
•Material: cast iron
• Tensile stress=160MPa
•Stress comes out= **147.67MPa**
• Factor Of Safety=1.083

BRAKING

OBJECTIVE	METHOD	RESULT
• Capable of decelerating a 309.93kg vehicle. •Capable of locking all the four wheels at the same time .	▪ Study of different hydraulic brakes along with analytical study and calculations .	Assembly of Apache RTR 180 is finely selected and stopping distance is calculated as 7.17 m at 12.5 m/sec.

Lessons Learnt & Improvements:

✓**Removal of Cutting Brakes-** We are using locked spool instead of differential, so there will be no slipping of rear tires.
✓ **Brake Circuit-** Previously Conventional Braking Circuit was used. This time we are using Diagonal Braking Circuit, so that braking power is available on the axles at the time of brake failure.
✓**Bleeding-** Bleeding should be proper.

Brake Specifications		
	FATEH (2012 – 13)	**PROMETHEANS**
Disc Brake	Apache-RTR 180	Apache-RTR 180
Brake Calipers	Apache-RTR 180	Apache-RTR 180
Tandem Master Cylinder	Maruti 800	Maruti 800
Leverage Ratio	5:1	6:1
Brake Fluid	DOT 3	DOT 4
Piping System	Conventional (H) Type	Diagonal (X) Type

Previous Design	Design Iteration
•Two calipers are used for the purpose of cutting brakes.	•We are reducing the weight and cost by using one caliper and locked spool

➢ **Weight distribution** is 40:60; if the vehicle stops within 7.17 m, then weight transfer of **95.13 kg** from rear to front will take place. Now, the weight distribution will be of 70:30.

BRAKING DESIGN CALCULATIONS

Leverage Ratio	6:1
Pedal Force :	2400N
Master Cylinder Pressure	8411541.031 N/m^2
Force acting on Caliper :	2397.48 N
Total Braking Force	3377.32 N
Max Deceleration	10.89 m/s ^{2}
Total Stopping time	0.86 + 1.15= 2.01 s
Sight Stopping Distance	10.75 +7.17=17.92
Torque Generated :	Front Wheel = 1005.15 N-m Rear Wheel =704.65 N-m
Torque Required :	Front Wheel = 981.43 N-m Rear Wheel = 406.93 N-m
Efficiency :	89.95%

Pedal Assembly

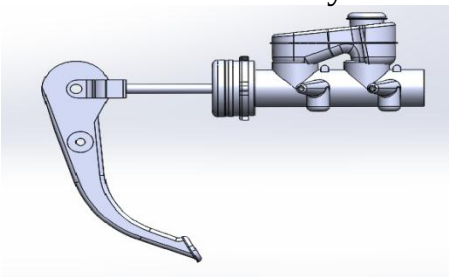

FEA of Lever

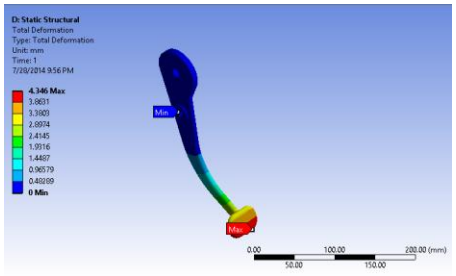

Applied Load :	**2500 N**
Max. Stress :	**260.55 MPa**
Max. Deformation :	**8.42 mm**
FOS :	**1.76**

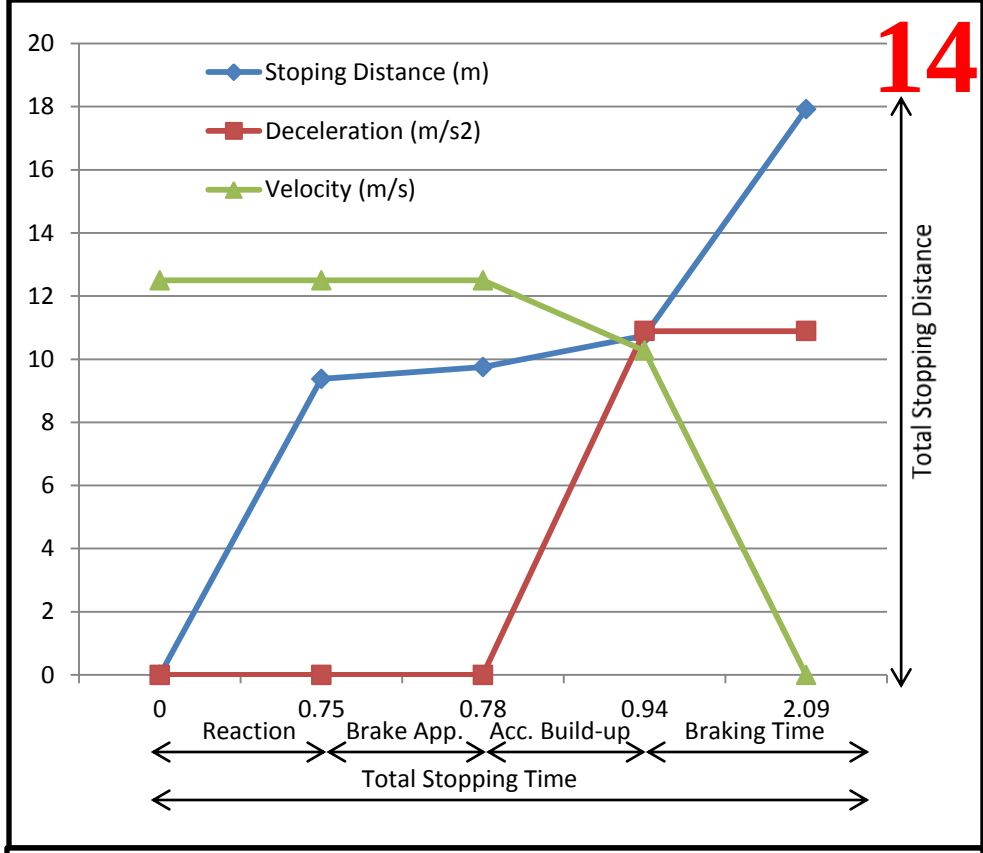

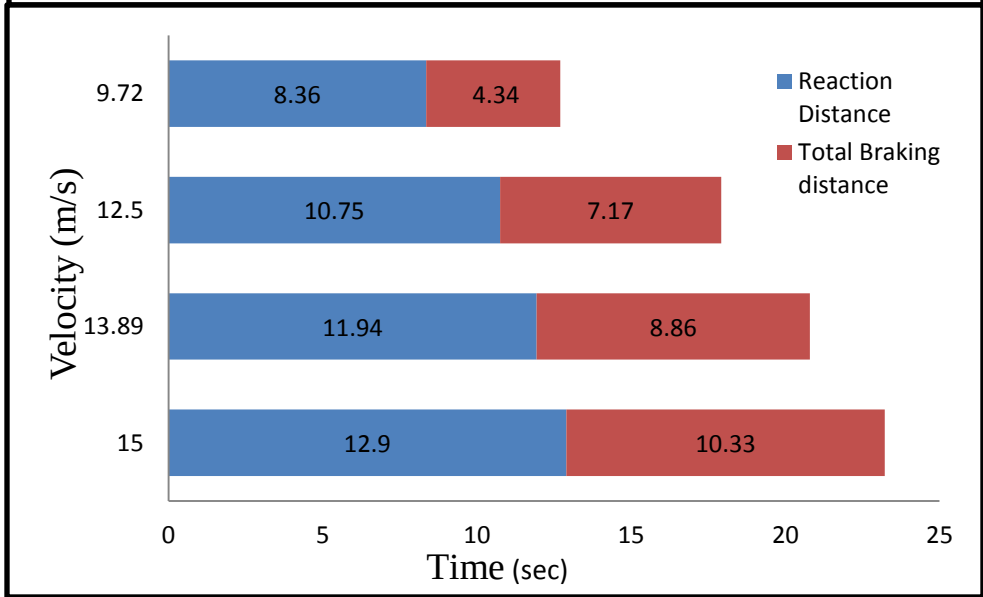

TRANSMISSION

Objective: To design a power train which has high torque, driver control, reverse gear and high performance.

Method: We select manual transmission.

ENGINE → CHAIN SROCKET → MAHINDRA ALFA GEAR BOX → WHEELS

DESIGN LAYOUT

COMPARISON	2013 TEAM FATEH	2015 PROMETHEANS
Engine	B&S 10 HP	B&S 10 HP
Transmission	CVT Polaris P90	MANUAL
Gearbox	Mahindra alfa 4th gear only	Mahindra Alfa 5 speed 4 F- 1 R
Max speed	43.44 km/h	55.10 km/h
Traction	2957.60 N	1900 N
Gradability	83.1 %	59.47 %
Inclination angle	39.7 deg	30.73 deg
Differential	Open	Locked Spool
Tire	24x8x12 Front 24x8x12 Rear	23x7x12 Front 23x8x12 Rear
GVW	360 Kg	310 Kg

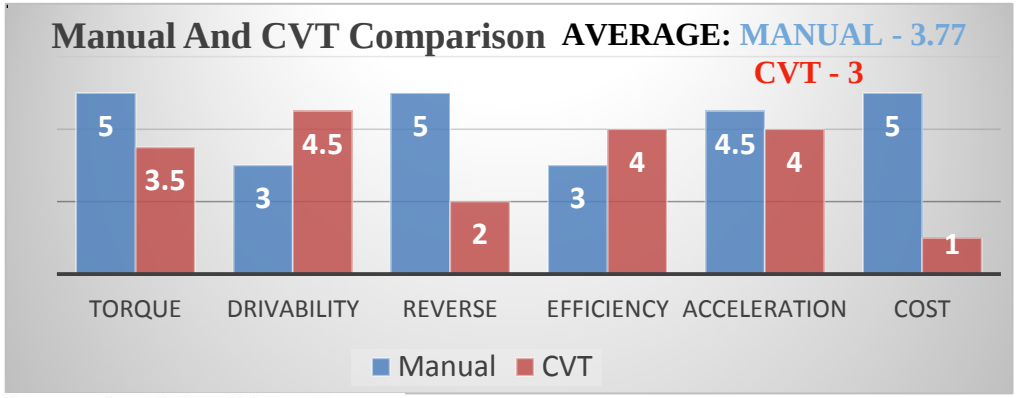

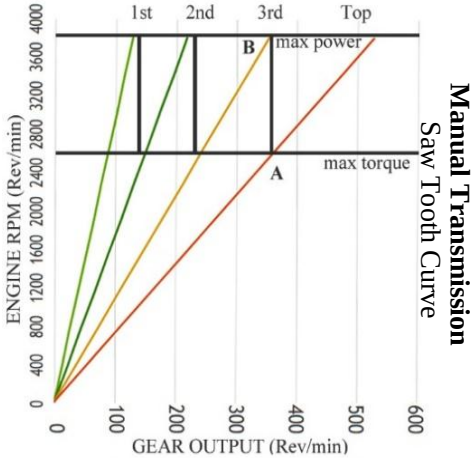

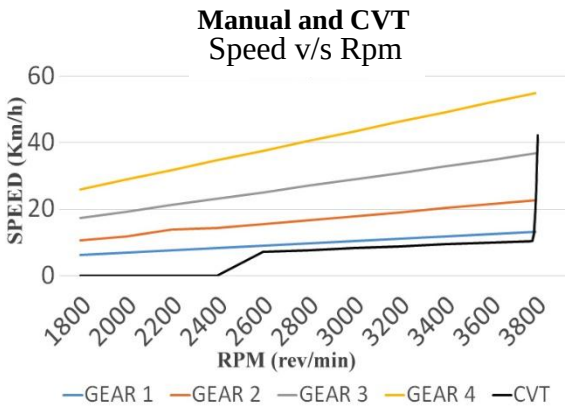

Gear Ratio	Total Ratio	Speed km/h	Acceleration m/s^2	Gradability max	Tractive force(N)	Total Res. (N)
1) 4.6	31.13	13.35	6.27	59.47% (30.73º)	1900	98.17
2) 2.7	18.38	22.75	3.69	33.49% (18.51º)	1110	106.17
3) 1.667	11.35	38.85	2.28	19.52 % (11.04º)	685	126.17
4) 1.115	7.59	55.10	1.52	12.06 % (6.87º)	458	16617
Reverse	17.86	23.41		32.48% (17.99º)	1079	107.17

DESIGN CONSIDERATIONS

Max Power	10 HP at 3800 rpm
Max Torque	19.6 Nm at 2600 rpm
Efficiency	90%
Chain Sprocket	Bullet 350 cc chain
Chain Length	37.39 in
Chain Overdrive	0.57
Transfer Case Ratio	2.869
Rear Axle Ratio • **Forward** • **Backward**	 • 4.17 • 2.38
Material of Hub	Al 6061 T6
Material of stub axle	EN19

LESSONS LEARNT	IMPROVEMENT
High tractive force made our vehicle slip in hill climbing.	We got right amount of tractive force.
Due to open differential the vehicle got stuck in mud.	Locked spool differential can overcome this problem.
The gradability was surplus.	Gradability is sufficient.
Weight & cost of cvt & gearbox is high	Weight & cost of gearbox is less

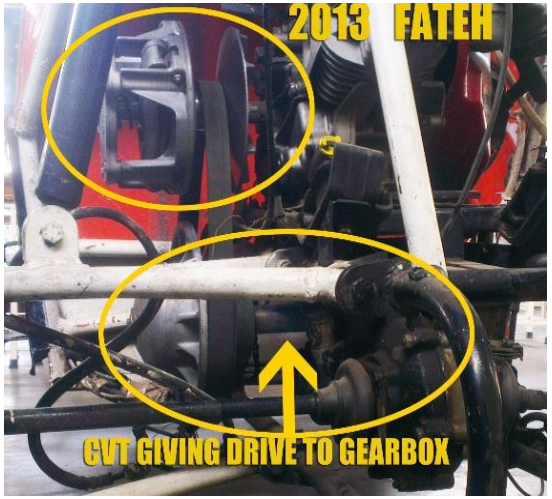

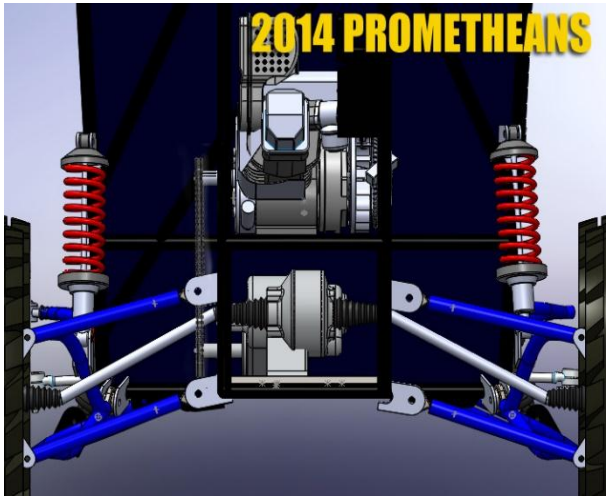

Manual Transmission
Tractive force v/s Speed

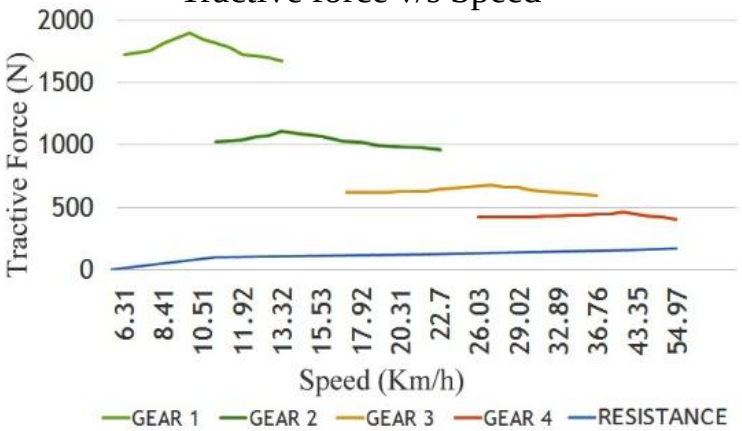

Torque Applied: 1000 Nm
Max Stress: 0.082914 MPa

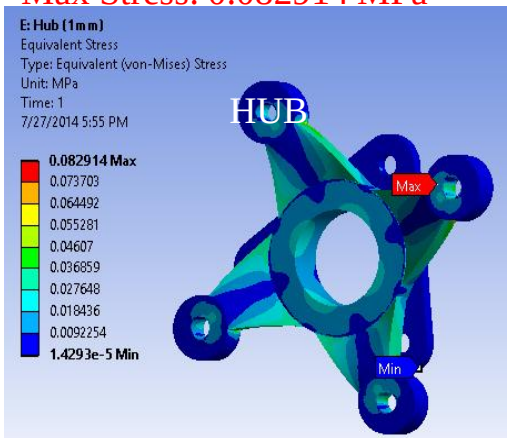

COST & WEIGHT ESTIMATION

Items	Estimated Cost (RS.)	Estimate Wt . (Kg.)
Engine	27,254.00	43.9
Transmiss-ion	17,779.11	19.3
Drive Train	44,460.00	57.3
Steering	4,200.00	6
Suspension	28,930.00	32.8
Frame	34,400.00	41
Brake	12,405.00	13.6
Electrical Equipment	3,475.00	3.5
Fasteners	3,151.00	3.85
Safety	13,614.00	1.8
Miscellan-eous	1,800.00	20
Innovation	3500	2
Total	Rs 1,94,968.11	235.05

FATEH (2013)

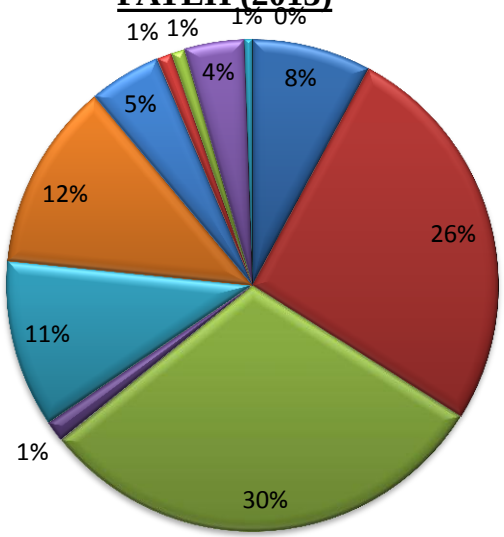

Total Cost – Rs 3,65,653.97

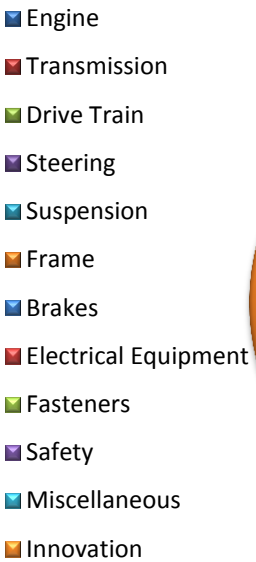

PROMETHEANS

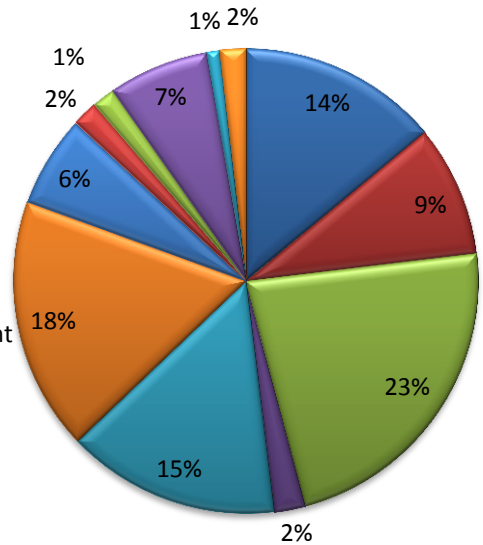

Total Cost Estimation – Rs 1,94,968.11

Last Year

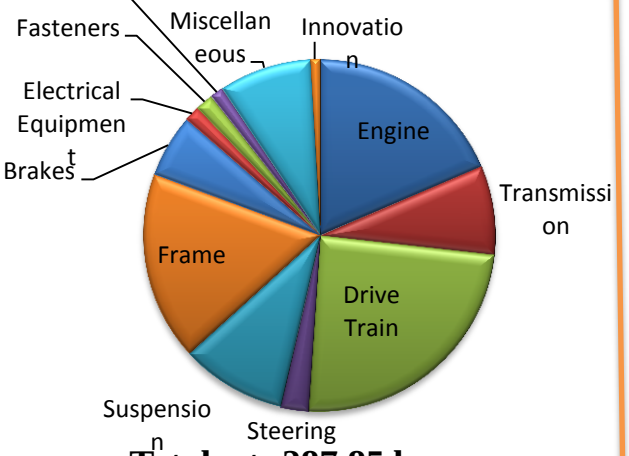

Total wt.-287.85 kg

PROMETHEANS

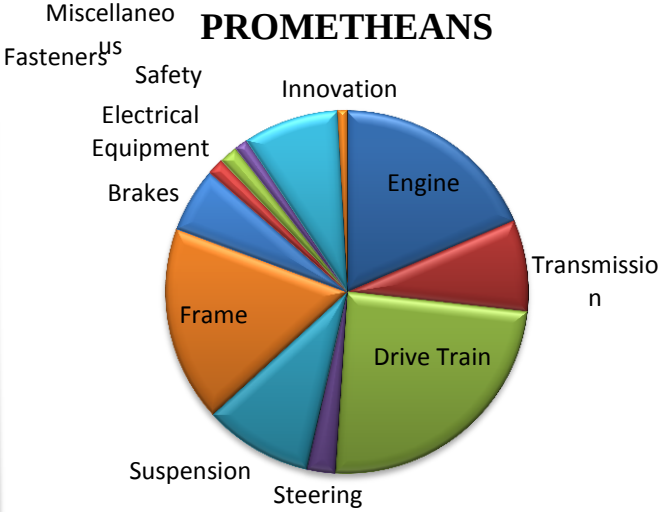

Total Estimated Wt. -235.05 kg

❖ **We are financially supported by Shreyans Industries Ltd. and our College mechanical trustee for this project .**

PROJECT PLAN

ID	Task Name	Duration	Start	Finish	Resource Names	% Work Complete
1	**BAJA SAE INDIA 2015**	**182 days**	**Wed 6/18/14**	**Wed 2/18/15**	**BAJA SAE INDIA 20**	**23%**
2	Team member selection	7 days	Wed 6/18/14	Thu 6/26/14	Interviews & Test	100%
3	Team Member Registration	1 day	Sat 6/28/14	Sat 6/28/14	Online Registration	100%
4	**Preliminary Design**	**27 days**	Mon 6/30/14	**Sat 8/2/14**		**82%**
5	Benchmarking	2 days	Mon 6/30/14	Tue 7/1/14	Baja 2012-2013	100%
6	Free Hand Sketches	4 days	Wed 7/2/14	Mon 7/7/14	Team Member	100%
7	Design Of Roll cage	4 days	Tue 7/8/14	Fri 7/11/14	Catia V5R 19/Solidworks	100%
8	Selection Of Other Components	7 days	Mon 7/7/14	Tue 7/15/14	Market Research	100%
9	Analysis Of Roll cage	2 days	Mon 7/14/14	Tue 7/15/14	Ansys	100%
10	Final PDR	5 days	Mon 7/14/14	Fri 7/18/14	Final Design Report	100%
11	Approximate Cost Report	5 days	Tue 7/15/14	Sun 7/20/14	Market Research	100%
12	Prototype Model (1:1 scale)	5 days	Mon 7/14/14	Fri 7/18/14	Model	100%
13	Presentation	5 days	Mon 7/14/14	Fri 7/18/14	M S Power Point	100%
14	Small Scale Prototype Model	2 days	Fri 7/18/14	Sun 7/20/14	Working Model	100%
15	Final Presentation	8 days	Mon 7/21/14	Wed 7/30/14	Demo To Faculty	0%
16	Virtual Baja	1 day	Sat 8/2/14	Sat 8/2/14	Team Member	0%
17	**Change in PDR**	**6 days**	**Mon 8/4/14**	**Mon 8/11/14**		**0%**
18	Final Design Report	6 days	Mon 8/4/14	Mon 8/11/14		0%
19	Final Registration	1 day	Tue 8/12/14	Tue 8/12/14		0%
20	**Fabrication**	**102 days**	**Wed 8/13/14**	**Wed 12/31/14**		**0%**
21	Raw Material	10 days	Wed 8/13/14	Tue 8/26/14	Market	0%
22	Cutting and machining Of Material	17 days	Mon 8/18/14	Tue 9/9/14	Workshop 1	0%
23	Welding	17 days	Mon 9/8/14	Tue 9/30/14	Workshop 2	0%
24	Finishing of Roll cage	7 days	Mon 9/29/14	Tue 10/7/14	Workshop 3	0%
25	Purchasing of other components	15 days	Mon 9/22/14	Fri 10/10/14	Market	0%
26	Assembly of different components	15 days	Mon 10/6/14	Fri 10/24/14	Workshop 4	0%
27	Final assembly	7 days	Fri 10/24/14	Sun 11/2/14	Workshop 5	0%
28	Testing of vehicle	25 days	Mon 11/3/14	Fri 12/5/14	College campus	0%
29	Problem solving	10 days	Mon 12/8/14	Fri 12/19/14	Workshop	0%
30	Final testing	8 days	Mon 12/22/14	Wed 12/31/14	Near college campus	0%
31	**Final design**	**35 days**	Mon 1/5/15	**Wed 2/18/15**		**0%**
32	Design report	15 days	Mon 1/5/15	Fri 1/23/15		0%
33	Marketing Presentation	5 days	Tue 1/27/15	Sun 2/1/15	M-S Power Point	0%
34	Final cost report	3 days	Sun 2/1/15	Tue 2/3/15		0%
35	Practice	10 days	Tue 2/3/15	Sun 2/15/15	Drivers	0%
36	BAJA SAE 2015	3 days	Wed 2/18/15	Fri 2/20/15		0%

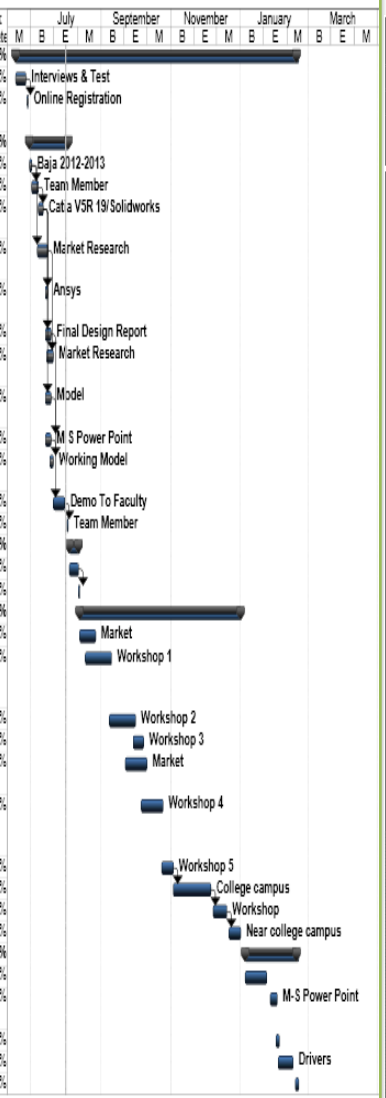

Project: Project planning
Date: Fri 8/1/14

Task		External Tasks		Manual Task		Finish-only	
Split		External Milestone		Duration-only		Progress	
Milestone		Inactive Task		Manual Summary Rollup		Deadline	
Summary		Inactive Milestone		Manual Summary			
Project Summary		Inactive Summary		Start-only			

DESIGN VALIDATION PROCEDU

18

DESIGN VALIDATION PLAN

Team name: PROMETHEANS	College Name : Maharishi Markandeshwar Engg. College	
Car Number: Not Defined	Time period for testing:	
Responsibility: To All Team Head Members		
Vehicle Design: Baja Sae India	DVP Creator : Krishna Mohan & Mudasir Farooq	

Department	Test Name	Reason for Testing	Procedure	Acceptance Criteria	Responsible Person	Test Resource	Start Date	Finish Date	Remarks
ROLL CAGE	Material Selection	To check material resistance to different tests.	Pass your material through different tests such as Compression, Tension,Bending,Shear,Impact etc.	Test results should match ISO rating & also satisfy the required parameter in the required	Deepak Raina	U.T.M. At College Campus	20-Aug	23-Aug	If material fails in any of the tests then use high carbon percentage material.
	Weld Strength	To check the strength of welded joints.	Allow the roll cage to fall from a height or roll down through stairs & check for bends, cracks, dents in the welded area.	No bends should be present on the roll cage & the welded area.	Krishna Mohan	At College Campus	25-Oct	28-Oct	If bends or crack occur. Remove bends & weld again strongly.
TRANMISSION	Testing of Chain alignment	To check the alignment of chain and sprockets.	Run vehicle at vaeiable speed on off road track for 10 km.And check the derailiblity of the chain .	The chain and sprocket should be proper align.	Bhanu Goel	Near the College Campus	12-Dec	20-Dec	If the chain will derail then check the alignment of the chain and sprocket.
SUSPENSION	Suspension Indepency	To check the indepency of wheels	At 20 kmph, pass a single wheel over a bump & notice the effect on other wheels.	Depending upon the suspension rest of the wheels should not be effected by the bumps.	Aman Dagar	At College Campus	21-Dec	24-Dec	If other wheels gets effected then check for ball joint & dampers.
	Impact on Suspension	To check for flexibility of springs & dampers.	At normal speed , pass the vehicle over a bump so all the wheels are above the ground. On landing check the impact on suspension springs & dampers.	Damper should retain its original position as quickly as possible.	Mudasir Farooq	At College Campus	22-Dec	24-Dec	If dampers & suspension springs are not working properly then use high stiffness springs.
STEERING	Maneuverability Test	To check the controlled change in movement of steering.	Drive the vehicle through zig-zag road without stopping & touching the boundary.	Vehicle should pass easily without touching the boundary.y.	Gagan Jolly	At College Campus	26-Dec	29-Dec	If steering movement is hard & slow then check the steering system.
	Return Ability To Centre Position	To check the steering return position.	Take a turn while driving & leave the steering to check whether it returns to its centre position or not.	The steering wheel should return to the centre position quickly after the	Devan Bhardwaj	At College Campus	27-Dec	29-Dec	If it does not return to centre position then adjust the steering system.
BRAKES	Bleeding Test	To check for any air bubbles present in brake fluid	Press the brake pedal continuously & check for brakes feeling squishy, soft or not.	There should be no leakage in brake line.	Deepak Raina	At College Campus	29-Dec	05-Jan	If brakes feel squishy then open the tubing & submerge in brake fluid, press the pedal to refill the fluid.
	Stopping Distance	To check the braking efficiency of the vehicle.	Run vehicle at maximum speed. Apply brakes & calculate stopping distance.	Braking efficiency should lie between 60-80%. Below or beyond may be dangerous.	Alok Kumar Shahu	At College Campus	02-Jan	05-Jan	If vehicle will not stop within the calculated stoping distance then open the tubing & submerge in brake fluid, press the pedal to refill the fluid.
	Panic braking test	To check for proper locking of wheels.	Apply brakes at maximum speed & check for locking of wheels	All the wheels must be locked at the same time. The vehicle may skit	Manoj Kumar Rana	At College Campus	03-Jan	05-Jan	

DESIGN FAILURE MODE AND EFFECT ANALYSIS

Process step	Potential failure mode	Potential failure effects	SEV	Potential causes	OCC	Current process controls	DET	RPN	Actions recommended	Responsibility	Actions taken	New SEV	New OCC	New DET	New RPN
Braking	Brake fade	Brake pad wear/risk of accident	10	harsh braking/improper cooling	6	use Standard Apache brake pads	3	180	proper cooling of brakes	Akshansh Dwivedi	use deflectors to provide better cooling	10	4	3	120
	Hydraulic hoses oil leakage	Brake failure/Risk of accident	8	Improper attachment of Benjo bolts	6	Standard hoses of Apache RTR.	8	384	Replace by A+ Standard hoses .	Alok Kumar Sahu	Replaced by A+ standard hose	7	4	3	84
	Leakage in cylinder	Brake failure/Risk of accident/Vehicle damage	8	Damage in cylinder	3	Using Maruti Bosch Cylinder	5	120	Using Two Cylinders	Manoj Kumar	One Cylinder is replaced by Two.	7	1	5	35
Welding	Welding Defects	Sudden misalignement or cracks.	3	Application of excessive load	7	Proper allignment	8	168	Replace & allign properly.	Deepak Raina	Replaced & alligned properly.	3	6	9	162
	Weld Breakage	Brakage	5	Impact	3	TIG welding	3	45	High Factor of safety to ensure structural rigidity.	Prasanjeet Biswas	Re-welded in Zig-zag way properly.	5	3	3	45
Tire	Deflate	Inability to drive	7	piercing by objects	7	Tire checks before journey.	4	196	Carry spare tire and appropriate tools to change tire	Bhanu Goel.	Spare tire and appropriate tools permanently carried in trunk	7	7	4	196
Fuel	Fuel Leakage	Engine stops/ fire catches	10	Damaged fuel pipe/joints	5	Standard size	7	350	Repair / Replace	Gopal Singh	Repair	10	4	7	280
Engine	Air filter failure	Poor milage/ harmful for piston	4	Dirt inside the pipe	10	Standard air filter.	8	320	Clean / Replace	Pulkit Mehta	Clean	3	10	8	240
	over heating	Harmful for Engine/ Knocking	9	Continuously in working condition for	8	Air cooling	2	144	Use hoses/fans for proper cooling.	Krishna Mohan	Use proper Air cooling system.	8	7	2	112
	mounting points failure	exessive vibration / noise/Accidental	6	loosen monting nut	8	high strength Lock nut	6	288	washers with nylon nuts		washers with nylon nuts used	5	5	6	150
	Chain Derail	vehicle stops	3	loose or tight	7	mount properly	2	42	Repair		Repair	3	6	3	54
	wire break	Inability to accelerate	3	Aggresive use of acc. Pedal	8	Standard wire used.	1	24	Replace		Replaced and mountings properly checked	3	7	1	21
Steering	Breaking of steering arm.	Unable to steer.	8	Improper joint of steering arm/accidental	3	proper welding with 74.2% ackerman.	2	48	Repair / Replace	Deepak Raina	arm of 5mm plate is accurately welded.	7	2	2	28
	Slow movement of steering.	Improper working of steering.	7	Improper fixing or steering link.	6	Proper Mounting .	5	210	Proper alignment of steering system.	Md. Tabrez Alam	Proper alignment of steering system.	7	5	4	140
suspension	Breakage of A-arm.	Risk of accident/ damage.	8	Harsh riding over bumps .	7	Double-wisbone link suspension with 3mm thick pipe.	1	56	Use 4mm thick ASI4130 Pipe .	Aman Dagar	Replace A-arms with 4mm ASI 4130	8	6	1	48
	One sideTilting.	uncontrolled driving/ deformation	7	Bad contraction of spring	3	Good quality Dampars .	7	147	Use Best quality Dampars .		Replace by Best quality Dampars .	5	2	7	70
	knuckle breakage	vehicle will not move/accidental prone	9	weak suspension arm ball joint	5	properly tighten the ball joint	1	45	use standard ball joint with more thickened knucle	Atif amim	Replace knuckle with increased FOS	9	4	1	36
Transmission	Inability to operate	Power loss	2	Misalignment of chain drive.	5	Properly alligned Sprocket and Chain	8	80	Use holding Fixture.	Bhanu Goel.	Use holding Fixture.	2	4	8	64
	Axle breakage	No power transfer	4	welding breakge at centre joint	7	TIG welding	1	28	Proper TIG welding with supports		TIG welding with small supported plates in lateral position	4	6	1	24
Electrical system	Short circuit	No power supply	6	Loose connection .	6	Using good quality wires.	7	252	Proper insulation & connection.	Vishal Mukherjee.	Proper wiring & insulation.	5	5	8	200

Manufacturing Processes

Manufacturing Processes	Machine/Hand Tools	Facilities (Available/Required)
Raw Materials	----------	Required
Measuring & Marking	Measuring & Marking Tools	Available (college workshop)
Cutting	Power Hacksaw, Shearing	Available(college workshop)
Bending	Die, Pipe Bending Machine	Required
Edge Surfacing	Grinding Machine, Hand File	Available(college workshop)
Drilling	Bench Driller, Hand Drill	Available(college workshop)
Welding	Arc , Gas Welding & TIG Welding Machine	Available(college workshop)
Finishing of Roll Cage	Sand Paper , Hand File , etc..	Available(college workshop)
Casting(hub)	Die Casting	Required
Machining (Turning, Facing , slot cutting, boring)	Lathe, Milling, Shaper, CNC Lathe	Available(college workshop)
Machining Operations	Electrical discharge machine (EDM)	Available(college workshop)
Press fitting (Bearing, Bushes)	Hydraulic Press machine	Required
Assembly of Mounting (Engine & Firewall)	Tool Kit	Available(college workshop)
Assembly of Parts (Brake, Steering, Seat ,etc.)	Tool Kit	Available(college workshop)
Painting	Hand Spray paint/Spray machine	Required
Finalizing	As required	---------
Testing & Problem Solving	As required	At college campus

Team Strategy

Team Prometheans

Technical Dept.

Design

- Deepak Raina (H)
- Prasanjit Biswas
- Ayush Kumar
- Ritesh Pandey

Transmission

- Bhanu Goel (H)
- Krishna Mohan
- Gopal Singh
- Gopesh Kapoor

Suspension

- Aman Dagar (H)
- Atif Amin
- Sumit Singh
- Puspinder Singh

Brakes

- Manoj Kr. Rana(H)
- Deepak Raina
- Alok Kr. Sahu
- Akshansh Dwivedi

Steering

- Devan Bhardwaj (H)
- Md. Tabrez Alam
- Divyansh Naidu
- Gagan Jolly

Innovation

- Vishal Mukherjee (H)
- Aman Dagar

Management Dept.

Marketing

- Amit Kishore (H)
- Manoj Kr. Rana
- Ravindra Kumar

Quality Control

- Krishna Mohan (H)
- Pulkit Mehta (Go-Green)
- Mudasir Farooq (Materials)
- Anant Siddharth

Captain: Aman Dagar

Vice-Captain: Deepak Raina

Faculty Advisor: Er. Manish Shukla

Fateh-2013 & Prometheans-2015

Old Members: Aman Dagar, Deepak Raina, Bhanu Goel

INNOVATION -1

Objective : To shut off engine automatically in case of roll over using gyroscopic sensor.

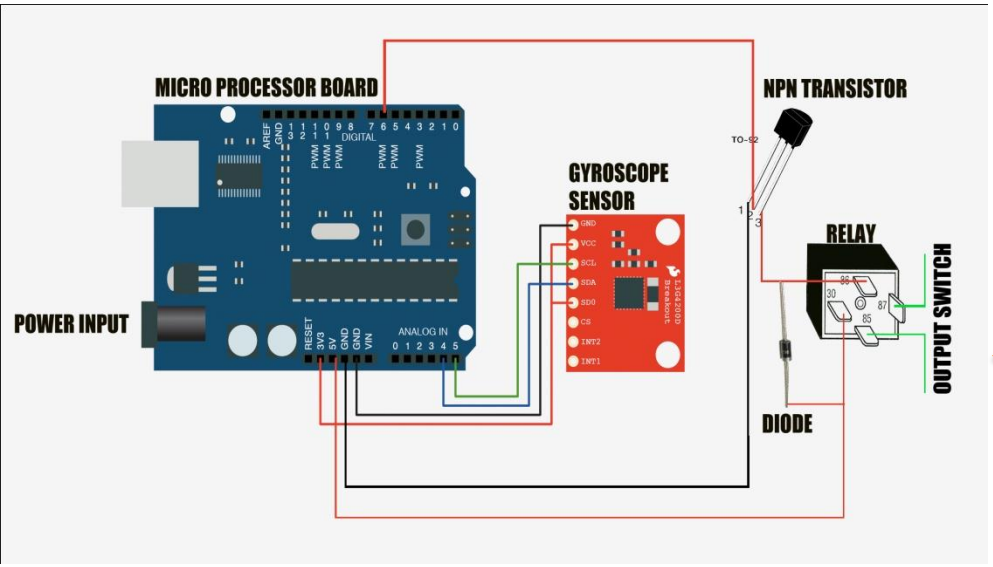

Circuit Diagram of Controller

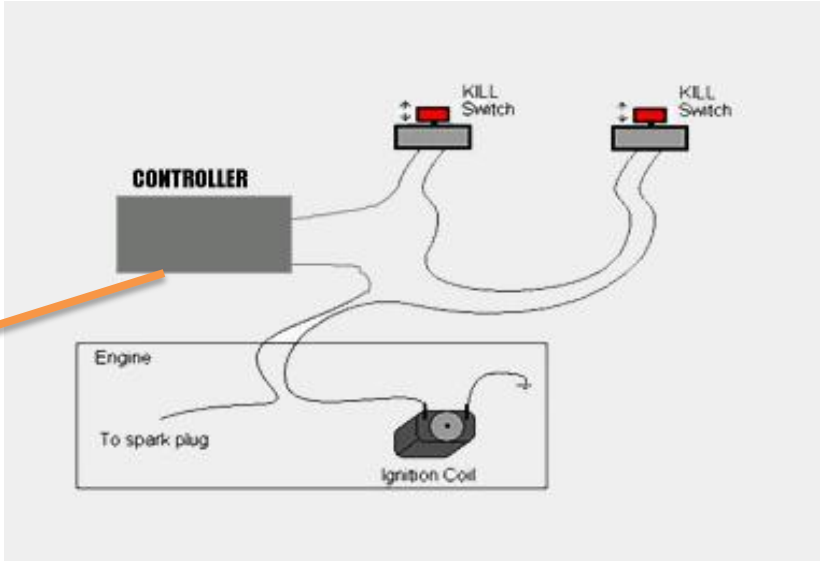

Circuit connection in the vehicle

Why it is needed ?

- If a vehicle tilts on a vertical plane, than it will be hazardous for driver as well as other vehicles passing by.
- With this arrangement the engine would be shut down and the loss due to accident can be reduce to some extent.

<u>Working:</u>

If the vehicle tilts in the vertical plane more than 50 degree, then the gyroscope sensor will send the corresponding potential to the PCB send the signal to cut off the voltage via relay which is connected in series with the spark plug. Hence it will automatically cut off voltage of spark plug and the engine will shut off.

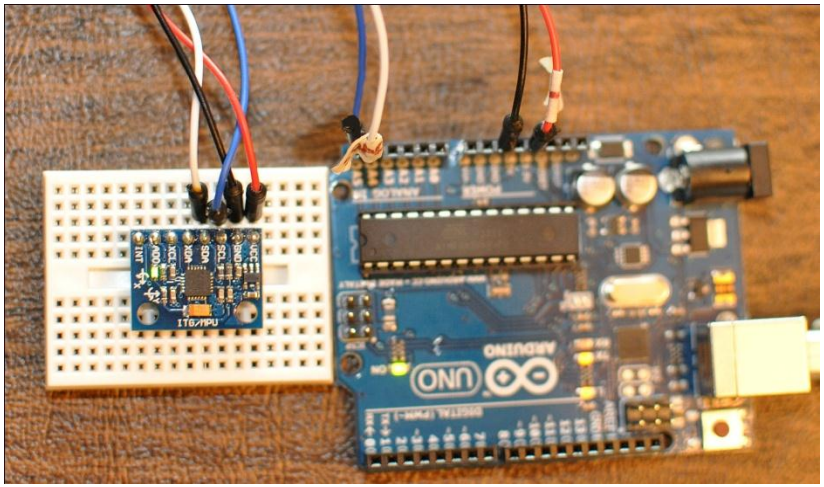

Prototype Circuit

INNOVATION -2

Objective : To automatically spray fire extinguisher in case of engine fire.

Why it is needed ?

- It may happen sometimes that the temperature of the engine will rapidly rise to such an extent that it will catch fire.
- So in order to prevent any fire hazard, we need the immediate application of fire extinguisher .
- With this arrangement we can prevent such hazard

Working :

In case the engine caught fire, then the temperature sensor will detect the rise in temperature and send corresponding voltage signals to the PCB, which in-turn will send potential to relay as signal and relay switch on circuit of the electric solenoid valve which will actuate and send the spray form from the fire extinguisher to the four nozzles provided around the engine. This will help to extinguish the fire automatically.

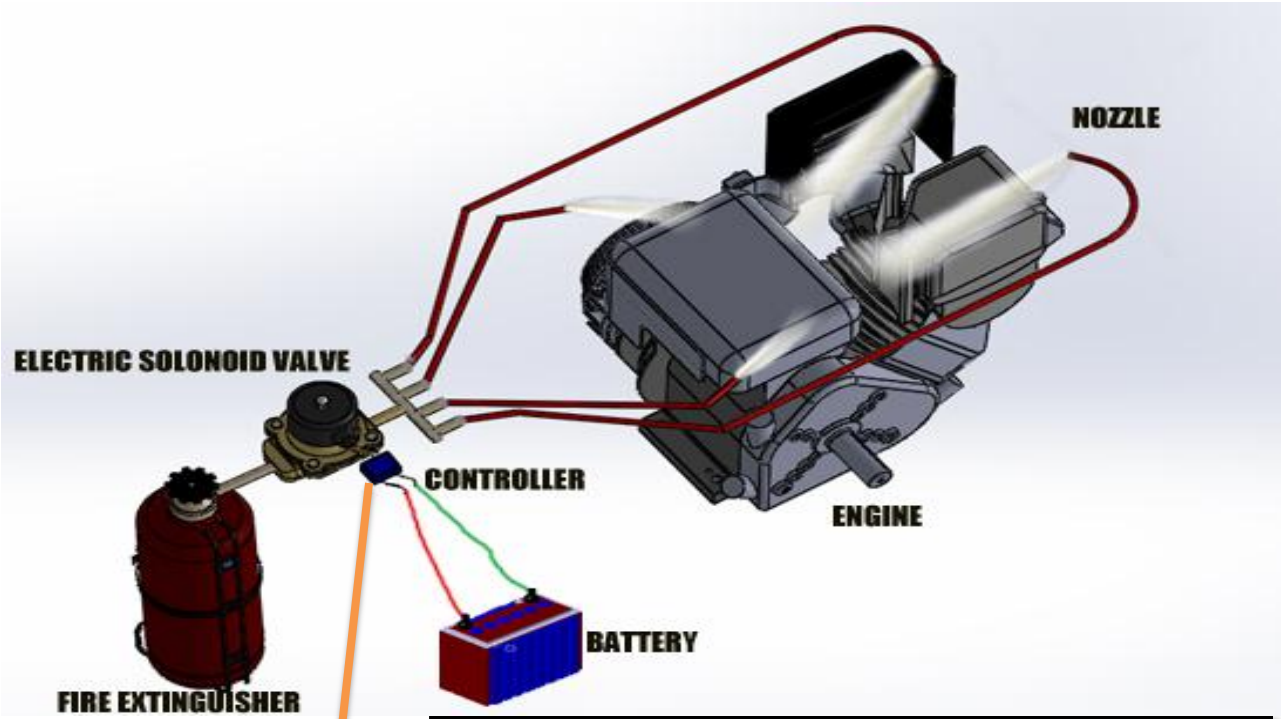

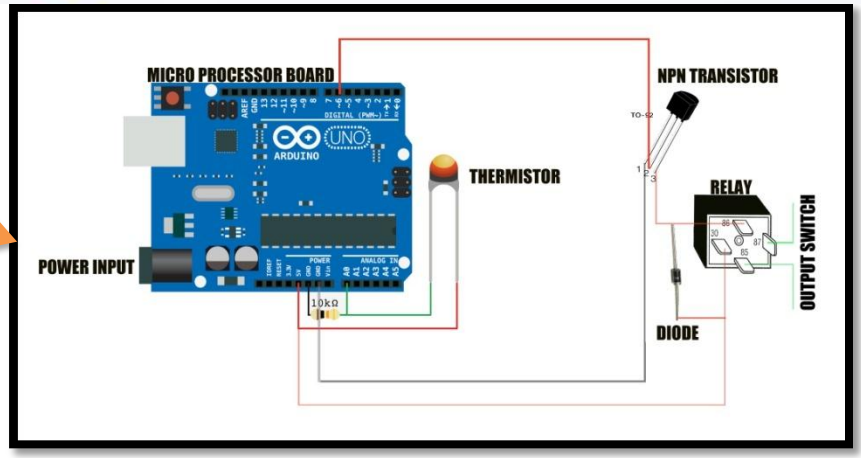

Circuit dia. Of Controller