SWIND EV PM100DX INVERTER - SPECIFICATION TABLE			
PARAMETER	UNIT	MIN.	MAX.
DC VOLTAGE	V	50	400
CONT. CURRENT	ARMS	300	
PEAK CURRENT	ARMS	350	
DC CAPACITANCE	uF	440	
LOW VOLTAGE SUPPLY	V	9	16
PWM FREQUENCY	KHZ	12	
COOLANT OPERATING TEMP.	°C	-40	80
COOLANT DERATE TEMP.	°C	80	100
COOLANT FLOW RATE	LPM	8	12
COOLANT PRESSURE	BAR (ABS)	-	4.5
PRESSURE DROP (60°C)	BAR	-	0.4
HV CABLE CROSS SECTION	MM^2	35	50
HV CABLE OUTER DIAMETER	MM	9	16.5
PRECHARGE RESISTOR	OHMS	300	-
COOLANT TYPE	50/50 MIX OF DISTILLED WATER & ETHYLENE GLYCOL		

LOW VOLTAGE CONNECTOR INFORMATION:

J1 - AMPSEAL 35-WAY

Plug PN: 776164-1
Contact PN: 770854-1

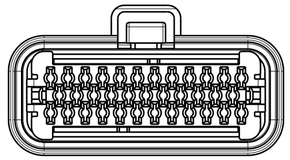

Front view
Scale: 1:1

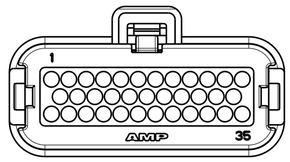

Rear view
Scale: 1:1

J2 - AMPSEAL 23-WAY

Plug PN: 770680-1
Contact PN: 770854-1

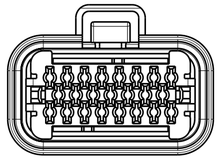

Front view
Scale: 1:1

Rear view
Scale: 1:1

HIGH VOLTAGE CABLE TORQUE SPECIFICATIONS:

- HV CABLE FERRULE CLAMP = 6NM +/- 1N
- HV CABLE ACCESS PLUG = 3NM
- HV CABLE GLAND = UNTIL SEAL IS COMPRESSED TO OUTER CABLE

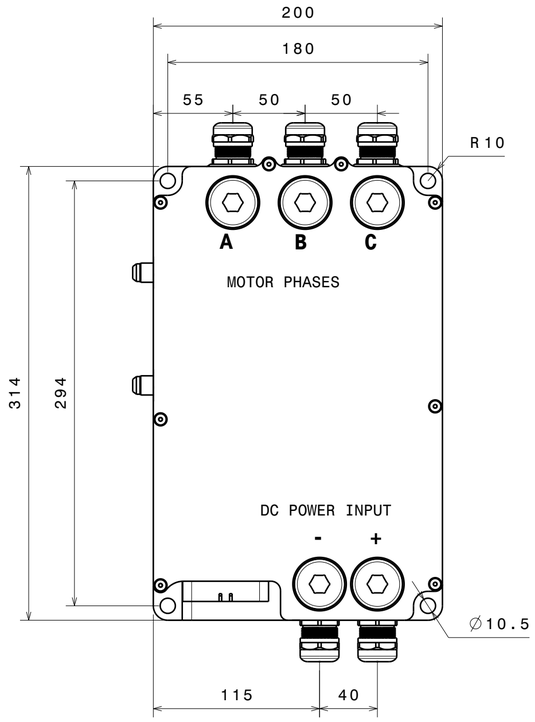

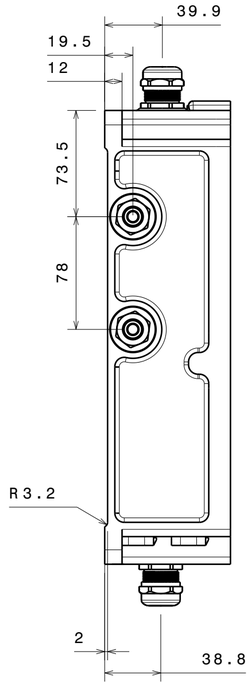

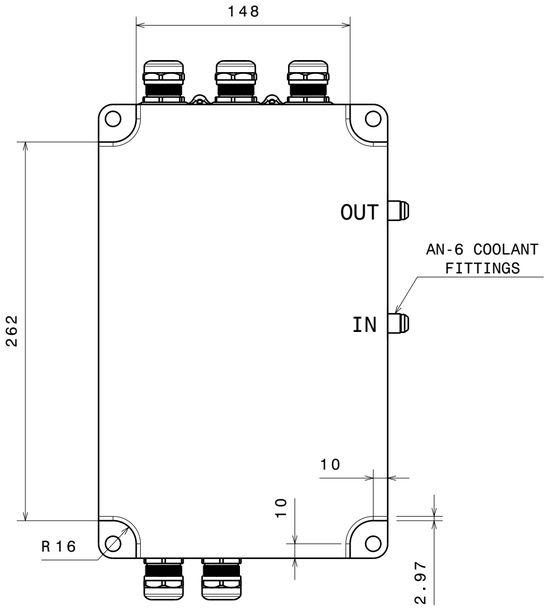

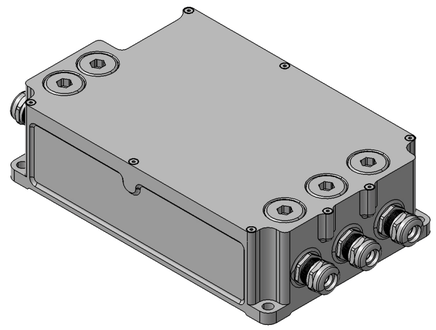

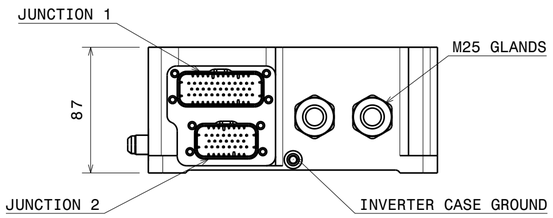

MASS = 7.5KG

***USE ANTI-VIBRATION MOUNTS ON M10 INVERTER MOUNTING BOLTS**
***ENSURE THAT INVERTER IS GROUNDED TO MOTOR CASE AND VEHICLE CHASSIS**

REVISIONS			
ISSUE:	DESCRIPTION:	DATE:	BY:
00	ORIGINAL DESIGN	05/05/2021	JC
01	ADDED COOLANT PRESSURE DROP INFORMATION	24/05/2021	JC
02			
03			
04			
05			
06			
07			
08			
09			
10			

DESCRIPTION:
SWIND EV PM100DX INVERTER

SWINDON

DRAWING NUMBER: **180-100-002.01** ISSUE:
SHEET: **1/3**
DIMENSIONS IN: **mm**

MATERIAL : N/A
TREATMENT : N/A
FINISH : N/A
PACKAGING : N/A
SCALE: **1:3@A2**
SIGN OFF:
DESIGNED BY: **JC**
CHECKED BY: **---**

TOLERANCES & FINISH (UNLESS STATED):
Linear : N/A
Angular : N/A
Roughness : N/A
Threads : N/A
Deburring : N/A

THIS DRAWING SHALL NOT BE LENT, COPIED OR DISCLOSED TO ANY OTHER PERSON OR USED FOR ANY PURPOSE WITHOUT THE WRITTEN CONSENT OF SWINDON POWERTRAIN LTD