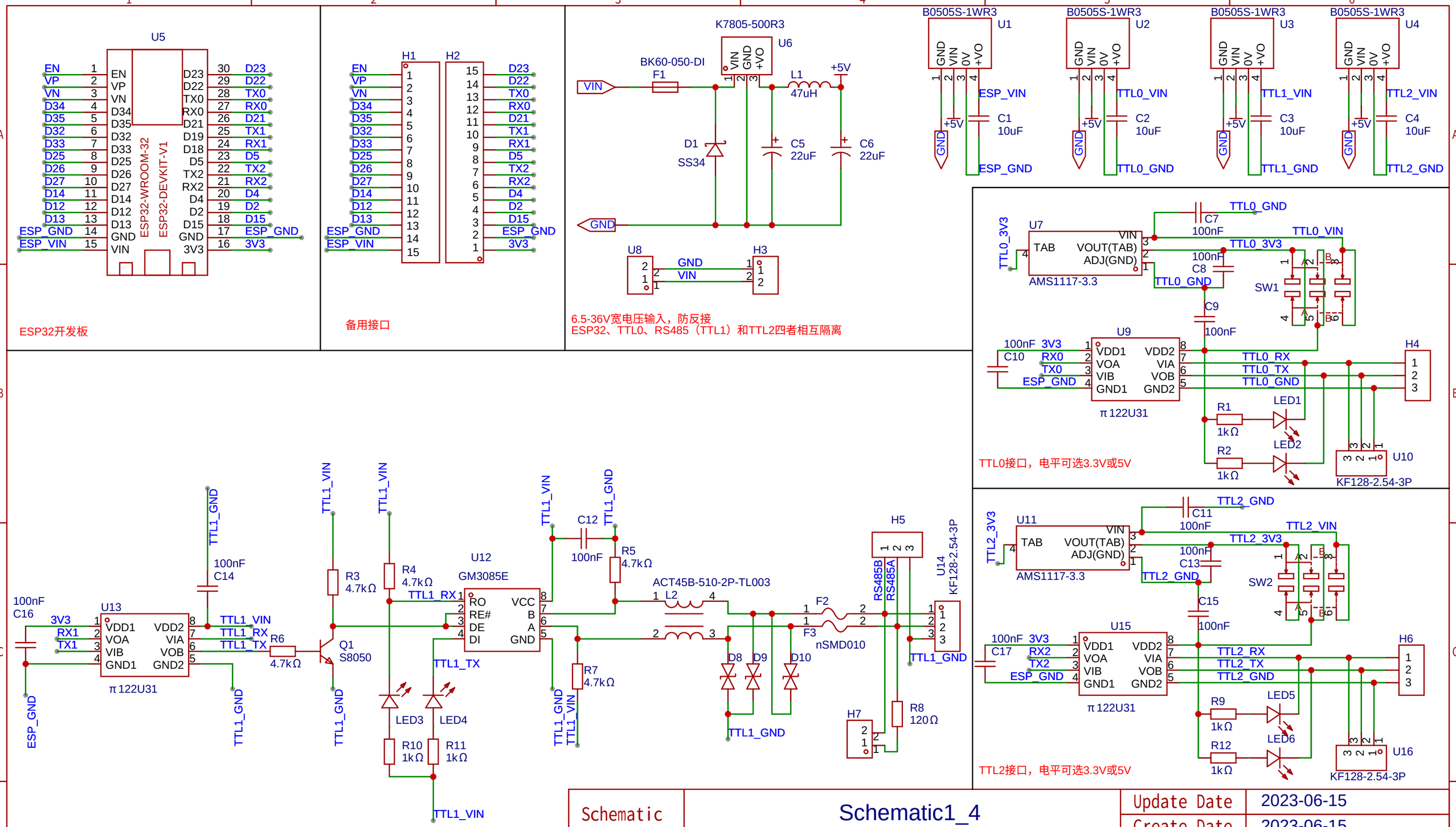

Schematic	Schematic1_4	Update Date	2023-06-15
		Create Date	2023-06-15
Page	P1	Part Number	
Drawed		ESP32扩展板（宽电压供电+隔离供电+隔离串口+隔离RS485）	
Reviewed			
		VER	SIZE	PAGE 1 OF 1
嘉立创EDA		V1.0	A4	嘉立创EDA