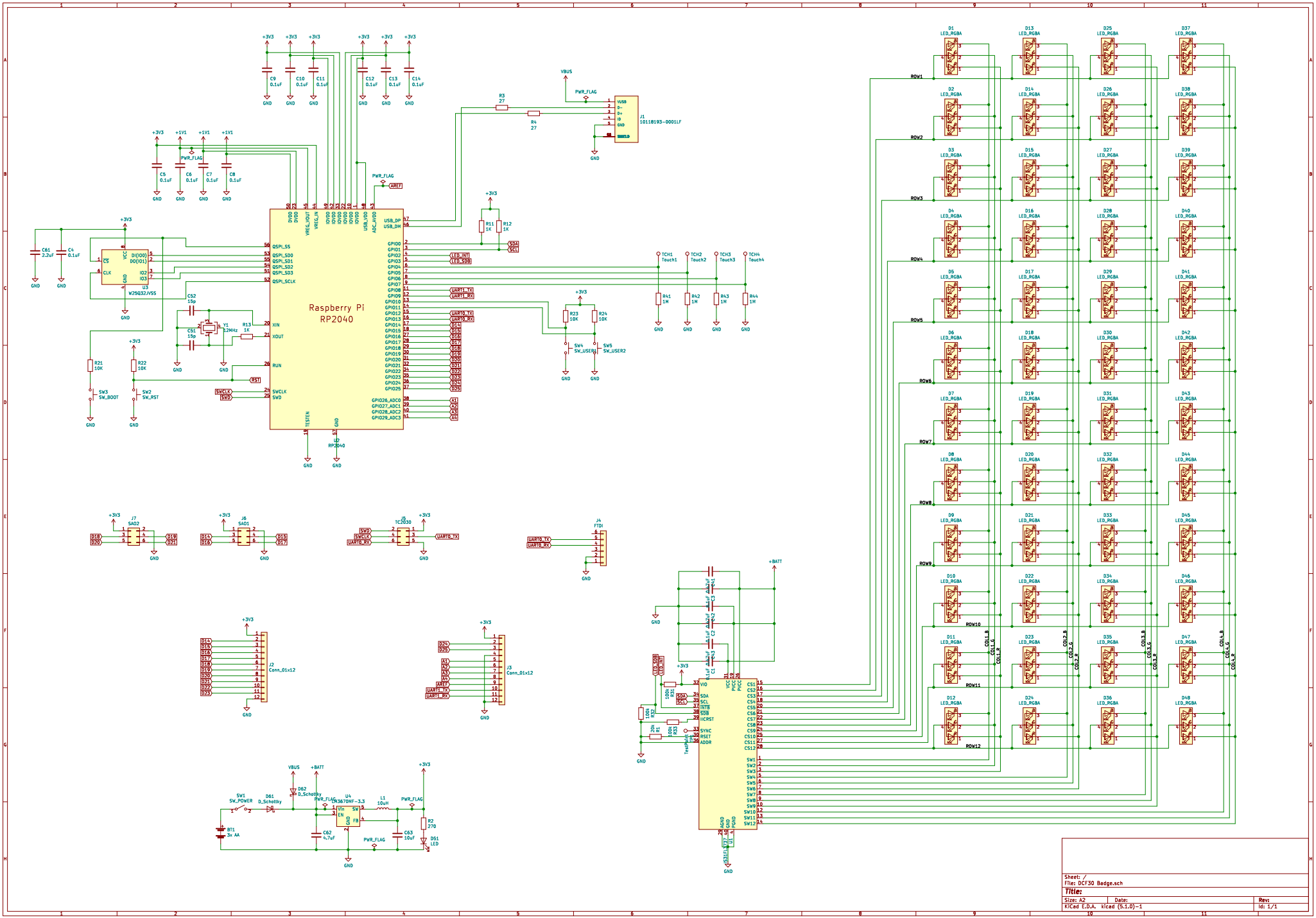
Raspberry Pi
RP2040
U2
RP2040
U3
W25Q32JVSS
J1
10118193-0001LF
VBUS
PWR_FLAG
+3V3
+1V1
GND
C9 0.1uF
C10 0.1uF
C11 0.1uF
C12 0.1uF
C13 0.1uF
C14 0.1uF
C5 0.1uF
C6 0.1uF
C7 0.1uF
C8 0.1uF
C61 2.2uF
C4 0.1uF
C52 15p
C51 15p
Y1 12MHz
R13 1K
R3 27
R4 27
R11 1K
R12 1K
R23 10K
R24 10K
R41 1M
R42 1M
R43 1M
R44 1M
R21 10K
R22 10K
SW3 SW_BOOT
SW2 SW_RST
SW4 SW_USER1
SW5 SW_USER2
TCH1 Touch1
TCH2 Touch2
TCH3 Touch3
TCH4 Touch4
LED_INT
LED_SDB
UART1_TX
UART1_RX
UART0_TX
UART0_RX
SWCLK
SWD
RST
AREF
SDA
SCL
J7 SAO2
J6 SAO1
J5 TC2030
J4 FTDI
J2 Conn_01x12
J3 Conn_01x12
U1 IS31FL3733
+BATT
SW1 SW_POWER
D61 D_Schottky
D62 D_Schottky
BT1 3x AA
U4 MT3670MF-3.3
L1 10uH
C62 4.7uF
C63 10uF
R2 270
D51 LED
ROW1
ROW2
ROW3
ROW4
ROW5
ROW6
ROW7
ROW8
ROW9
ROW10
ROW11
ROW12
COL1_B
COL1_G
COL1_R
COL2_B
COL2_G
COL2_R
COL3_B
COL3_G
COL3_R
COL4_B
COL4_G
COL4_R
Sheet: /
File: DCF30 Badge.sch
Title:
Size: A2
Date:
Rev:
KiCad E.D.A. kicad (5.1.0)-1
Id: 1/1