PETROBRAS	DATA SHEETS	No. I-FD-3010.2G-5330-800-DTG-301	
	CLIENT: E & P		SHEET 1 of 23
	JOB: BUZIOS FIELD AREA DEVELOPMENT		
	AREA: PETROBRAS 78 (P-78)		
SRGE	TITLE: INSTRUMENT-ELECTRICAL DATA SHEETS – OILY WATER SEPARATOR PACKAGE		(I)
			SCP78

Keppel Shipyard / Hyundai Heavy Industries	QE554ALQ54		
	CONTRACTOR Nº DTG		
File:	TECH.RESP.:: -	CREA Nº: -	INITIALS: -

INDEX OF REVISIONS

REV.	DESCRIPTION AND/OR REVISED SHEETS
0	ISSUED FOR DESIGN
A	APPROVED FOR DESIGN
B	APPROVED FOR DESIGN
C	CERTIFIED

	REV. 0	REV. A	REV. B	REV. C	REV. D	REV. E	REV. F	REV. G	REV. H
DATE	18/10/2021	07/12/2021	30/12/2021	18/03/2024					
DESIGN	DL	DL	DL	MS					
EXECUTION	DL	DL	DL	MS					
CHECK	MS	MS	MS	MS					
APPROVAL	-								

INFORMATION IN THIS DOCUMENT IS PROPERTY OF PETROBRAS, BEING PROHIBITED OUTSIDE OF THEIR PURPOSE

FORM OWNED TO PETROBRAS N-0381 REV. L

INDEX

1-ELECTRIC HEATER – RS1 3

2- ELECTRIC MOTOR -M1 5

3- LEVEL SENSOR – LS3 7

4- PRESSURE SWITCH– PS1 12

5- FLOW SWITCH – FS1 14

6- GAUGES, PRESSURE &VACUUM 15

7- TFT DISPLAY IN CONTROL PANEL 17

8- MONITOR – 15PPM BILGE ALARM 19

9- SOLENOID VALVES – VS8, VS5, VS6, VS16, VS17 21

10- SOLENOID VALVE – VS18 23

1-ELECTRIC HEATER – RS1

3 element DL Shaped	
Rods	Ø10 AISI-316L
Connection box	POLYAMIDE - IP-66
Máx. Working pressure	2,5 bar.
Voltage	3 – 440V.
Power	1.500 W
Thermostat	Internal, included. Setting point at 40ºC
Temperature control range	0 – 40ºC
Connection	2” NPT

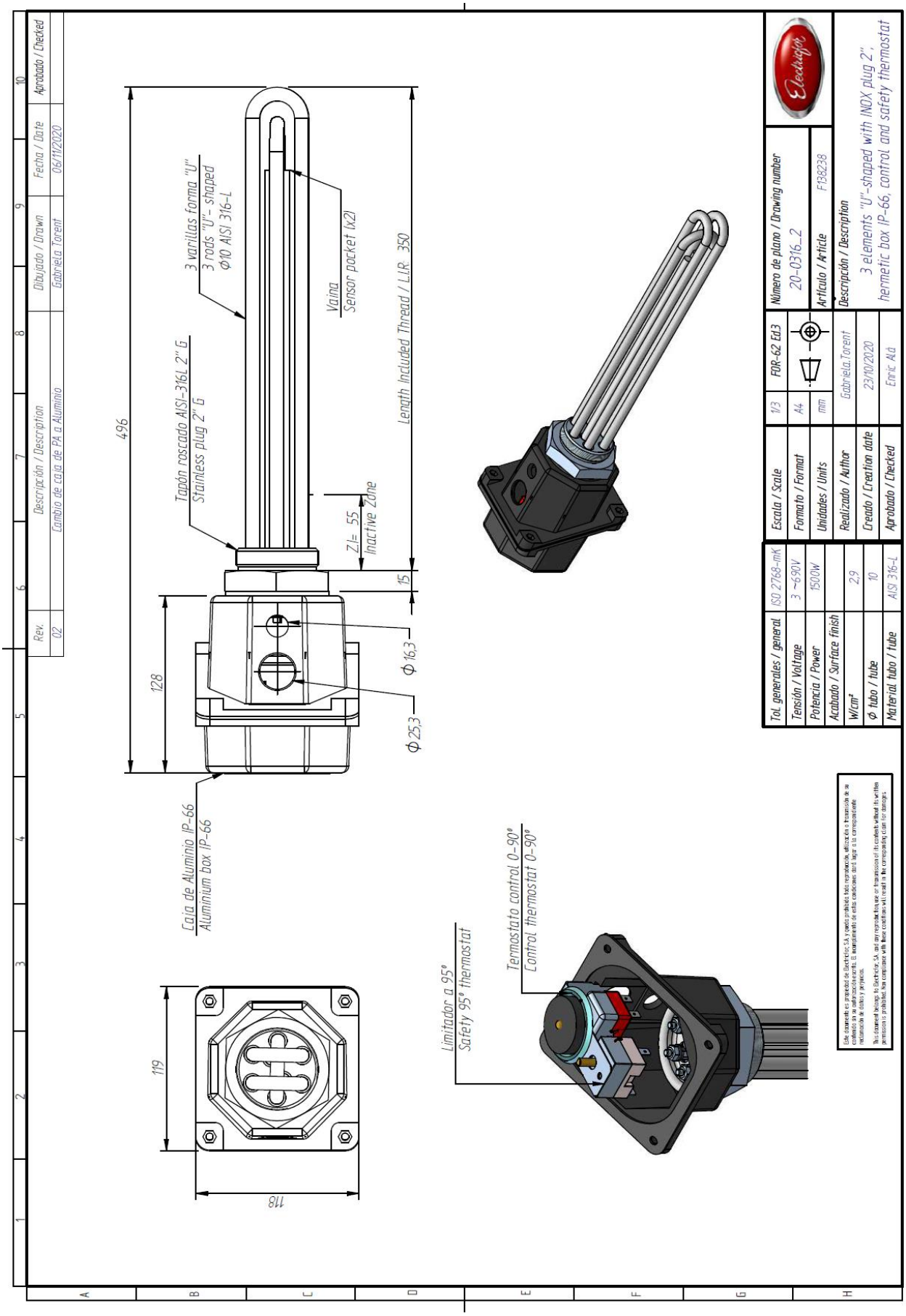
Rev.
02
Descripción / Description
Cambio de caja de PA a Aluminio
Dibujado / Drawn
Gabriela Torent
Fecha / Date
06/11/2020
Aprobado / Checked
496
3 varillas forma "U"
3 rods "U"- shaped
Ø10 AISI 316-L
Vaina
Sensor pocket (x2)
Tapón roscado AISI-316L 2" G
Stainless plug 2" G
Length included Thread / L.I.R. 350
ZI= 55
Inactive Zone
15
128
Ø 16,3
Ø 25,3
Caja de Aluminio IP-66
Aluminium box IP-66
119
118
Limitador a 95º
Safety 95º thermostat
Termostato control 0-90º
Control thermostat 0-90º
Tol. generales / general
ISO 2768-mK
Tensión / Voltage
3 ~690V
Potencia / Power
1500W
Acabado / Surface finish
W/cm²
2,9
Ø tubo / tube
10
Material tubo / tube
AISI 316-L
Escala / Scale
1/3
Formato / Format
A4
Unidades / Units
mm
Realizado / Author
Gabriela.Torent
Creado / Creation date
23/10/2020
Aprobado / Checked
Enric Ala
FOR-62 Ed.3
Número de plano / Drawing number
20-0316_2
Artículo / Article
F138238
Descripción / Description
3 elements "U"-shaped with INOX plug 2", hermetic box IP-66, control and safety thermostat
Electrofyr

2- ELECTRIC MOTOR -M1

Motor SK372.1F-100AP/4	
Tension	**440v 60Hz 3Ph**
IP	**66**
Insulation class	**F**
Speed	**600 rpm.**
Power	**3 Kw.**

440V stamping requested - Max ambient temperature 45°C

Product Name	Helical Inline Gears NORDBLOC.1
Input Speed	1765 tr/min
Motor Series	APAB
Motor Inverter Speed Range	Standard Line Powered - Inverter Capable
Ratio	2.86
Output Speed	616 tr/min
Service Factor	1.9
Output torque	46.5 Nm
Overhung load	2.6 kN
Axial Load	7.1 kN
Power	3 kW
Voltage	265/460 V
Frequency	60 Hz
Efficiency Class	IE3
Current 1	8.82 A
Current 2	5.09 A
Motor Duty	S1 - Continuous
Enclosure	IP66
Insulation	F
Mounting Pos	M1
Housing Material	Aluminum Housing
Type of housing	Foot Mount
Output Shaft	Solid Keyed Shaft
Output Shaft Dia	25X50 mm
Output Shaft Material	Standard
Gearbox Breather Options	Autovent
Gearbox Sealing Options	Standard
Bearing Design	Standard Bearings
Motor Cooling	TEFC - Totally Enclosed Fan Cooled
Terminal Box Pos	2
Conduit Entry Loc	I
Cable Glands	None
Nameplate Additional Marking	Standard Nameplate Marking

3- LEVEL SENSOR – LS3

Mechanical construction

Note!
All dimensions in mm (in)!

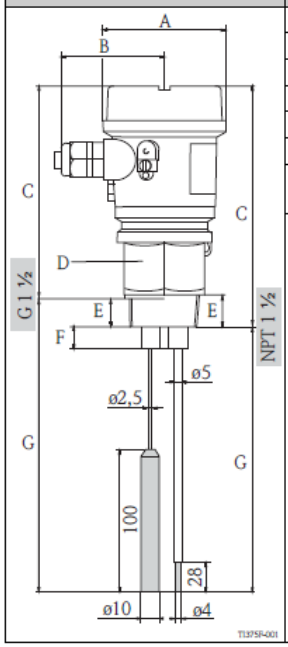

Design	Designation	Housing with electronic insert		Housing without electronic insert	
		Dimensions G 1 1/2	Dimensions NPT 1 1/2	Dimensions G 1 1/2	Dimensions NPT 1 1/2
	A	85 (3.35)		66 (2.6)	
	B	76 (2.99)		64 (2.52)	
	C	145 (5.71)	168 (6.61)	64 (2.52)	86 (3.39)
	D – across flats	55 (2.17)		55 (2.17)	
	E	22 (0.87)	23.5 (0.93)	22 (0.87)	23.5 (0.93)
	F	15 (0,59)		15 (0,59)	
	G – Probe length rod – Probe length rope	100 to 4000 (3.94 to 157) 250 to 15000 (9.84 to 591)		100 to 4000 (3.94 to 157) 250 to 15000 (9.84 to 591)	

Weights

Separate instrument version	2, 3 or 5 probes
Rod 1 m (3.3 ft) length	415 g, 530 g, 760 g (14.64 oz, 18.69 oz, 26.81 oz)
Rope 1 m (3.3 ft) length	390 g, 470 g, 640 g (13.76 oz, 16.58 oz, 22.57 oz)

Compact instrument version	2 or 3 probes
Rod 1 m (3.3 ft) length	600 g, 720 g (21.16 oz, 25.40 oz)
Rope 1 m (3.3 ft) length	710 g, 800 g (25.04 oz, 28.22 oz)

Material

Wetted

- Seal between probe rod/probe rope and process connection: EPDM
- Spacer: PP
- Flat seal for process connection: elastomer fiber, (asbestos-free)
- Process connections:
  - G 1 ½: PPS
  - NPT 1 ½: PPS

Probe rods

- Rod: 316L (1.4404) or carbon fiber
- Insulation: PP

Probe ropes

- Rope: 316Ti (1.4571)
- Insulation: FEP
- Weight: 316L (1.4435)

Electronic insert FEW54 (relay)

Output signal

AC/DC connection with relay output

Both relay contacts switch simultaneously.

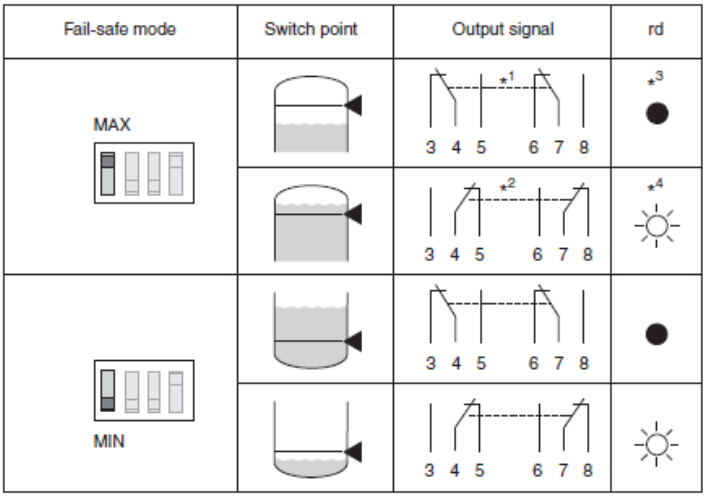

L00-FEW3xxxx-15-05-xx-en-002

**1 = Relay energized; *2 Relay de-energized; *3 LED not lit; *4 LED lit*
See also "Power supply" → 0.

If the probe is covered and the red LED flashes continuously, the sensitivity setting is too high. To ensure a safe switch status even if the conductivity of the medium varies slightly, reduce the sensitivity level.

Fail-safe mode

Selecting the correct fail-safe mode ensures that the relay always runs in quiescent current fail-safe.

- MAX safety (MAX): The relay de-energizes when the switch point is exceeded. (probe covered), a fault occurs or the power supply fails.
- MIN safety (MIN): The relay de-energizes when the switch point is undershot. (probe uncovered), a fault occurs or the power supply fails.

Sensitivity

The device operates in one of four sensitivity levels (100 Ω, 1 kΩ, 10 kΩ or 100 kΩ).
The sensitivity level is set using 2 DIL switches (SENS).
Setting on delivery: 100 kΩ (maximum sensitivity)

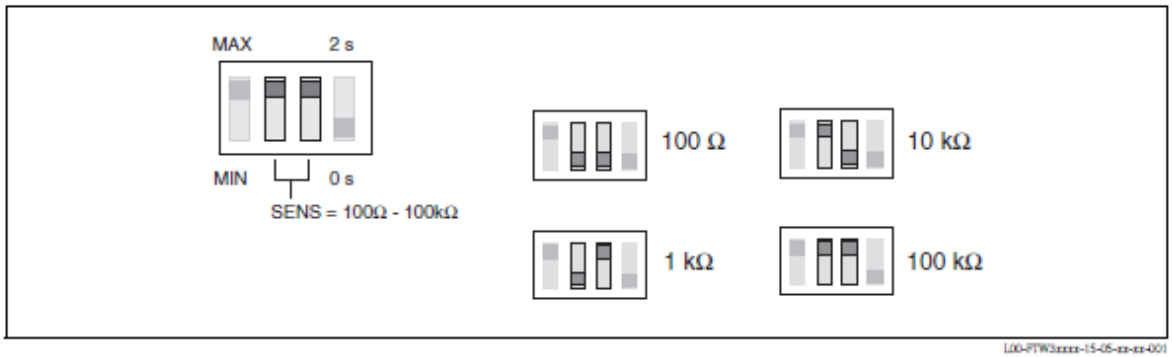

Switching delay

A switching delay of 2.0 s can be activated or deactivated via a DIL switch.
If the switching delay is set to 0 s, the device switches after approx. 0.3 s.

Signal on alarm

Output signal in the event of a power failure or a damaged probe: relay de-energized.

Load

Loads are switched via 2 potential-free change-over contacts.
I~ max. 4 A, U~ max. 253 V;
P~ max. 1000 VA, cos φ = 1, P~ max. 700 VA, cos φ > 0.7;
I– max. 4 A to 30 V, I– max. 0.2 A to 150 V.
When connecting a functional extra-low voltage circuit with double insulation in accordance with IEC 1010: the sum of the relay output and power supply voltages is max. 300 V.

Galvanic isolation

All input channels, output channels and relay contacts are galvanically isolated from each other.

Power supply

Compact instrument version with FEW54

Relay contact circuit for load

The connected load is switched via potential-free relay contacts (change-over contact).
In the event of a level alarm or a power failure, the relay contacts break the connections between terminals 3 and 4 and terminals 6 and 7. The relays always switch simultaneously.

Protection against voltage peaks and short-circuits

When connecting a device with high inductance, fit a spark barrier to protect the relay contact. A fine-wire fuse (load-dependent) can protect the relay contact in the event of a short-circuit.

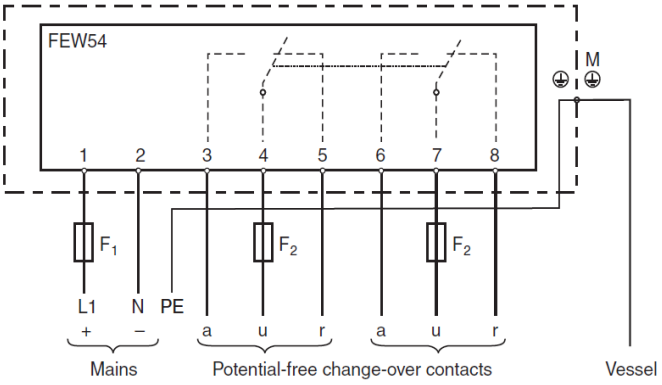

L00-FTW3xxxx-04-05-xx-en-002

Connecting the FEW54 electronic insert
F_1: Fine-wire fuse 500 mA, semi-time lag
F_2: Fine-wire fuse to protect the relay contact, load-dependent
M: Ground connection to protective earth (PE)

Supply voltage (FEW54)

- Supply voltage: U⎓ 20 V to 55 V DC or U~ 20 V to 253 V AC, 50/60 Hz
- Peak inrush current: max. 2 A, max. 400 µs
- Output: two potential-free change-over contacts
- Contact load capacity: U~ max. 253 V, I~ max. 4 A, U⎓ 30 V/4 A; 150 V/ 0.2 A

Power consumption

P < 2.0 W

Current consumption

I <60 mA

Cable entry	**M 20x1.5 and NPT 1/2 "** ▪ Quantity in F24 housing: 1 (separate instrument version) ▪ Quantity in F16 housing: 2 (compact instrument version) ▪ Conductor cross-section (including wire end sleeve): 2.5 mm² (14 AWG)
Cable specifications	Use a commercially available cable (25 Ω per wire).

Performance characteristics

Note!
When electronic insert is installed!

Reference operating conditions	▪ Ambient temperature: 23 °C (73 °F) ▪ Medium temperature: 23 °C (73 °F) ▪ Medium viscosity: medium must release the probe again (drain off). ▪ Medium pressure p_e: 0 bar (0 psi) ▪ Probe installation: vertically from above
Measuring error	±10 % at 100 Ω - 100 kΩ ±5 % at 1 kΩ - 10 kΩ
Non-repeatability	±5 % at 100 Ω - 100 kΩ ±1 % at 1 kΩ - 10 kΩ
Hysteresis	– 10% for the MAX probe, in reference to the switch point. Δs function disabled.
Switch-on delay	< 3 s
Influence of ambient temperature	< 0.05 %/K

Environment

Ambient temperature range	Non-hazardous area ▪ –40 to 70 °C (–40 to 158 °F) ▪ –40 to 60 °C (–40 to 140 °F) for FEW58 NAMUR
Storage temperature	–40 to 80 °C (–40 to 176 °F)
Climate class	Tropicalized as per DIN EEC 68, part 2-38
Degree of protection	IP66
Shock resistance	Practical test
Vibration resistance (at min. rod length)	DIN 60068-2-64 / IEC 68-2-64: 20 to 2000 Hz, 1 $(m/s^2)^2/Hz$
Electromagnetic compatibility	▪ Interference Emission to EN 61326, Electrical Equipment Class B Interference Immunity to EN 61326, Annex A (Industrial) ▪ Use for separate-instrumented probes a screened cable between the probe and the switching unit. For installation instructions for screened cables and general instructions for EMC inspection conditions for E+H devices, see also TI00241F.

4- PRESSURE SWITCH– PS1

Standard version

Case
Steel, galvanised

Reproducibility
±2 % of full scale value

Permissible temperature
Ambient: -20 … +80 °C
Medium: -20 … +80 °C

Process connection
Steel, galvanised
G 1/8, G 1/4, 1/8 NPT, 1/4 NPT, R 1/8 or M10 x 1

Measuring element
Diaphragm or piston with compression spring

Sealing
Diaphragm: NBR or EPDM
Piston: PTFE (dynamic) and NBR, EPDM or Viton® (static)

Viton® fluoroelastomer is a registered trademark of DuPont Performance Elastomers.

Switch contacts
High-quality snap-action switch, self-cleaning

Switching function
Selectable: Normally open, normally closed, change-over contact

Electrical rating

Current utilization 1)	Voltage			Current
	Angular connector	M 12 x 1, cable	All	
Resistive load AC-12, DC 12	AC 250 V	AC 48 V	DC 24 V	4 A
Inductive load AC-14, DC 14	AC 250 V	AC 48 V	DC 24 V	2 A

1) per DIN EN 60947-1

Electrical connection
Angular connector DIN 175301-803 A

Switching frequency
max. 100/min

Service life
> 2 x 10^6 switching cycles

Ingress protection
IP65 (IP67 with electrical connection M12 x 1[2]) or cable)

2) The stated ingress protection (per IEC/EN 60529) only applies when plugged in using mating connectors that have the appropriate ingress protection.

Setting ranges, max. working pressure, measuring principle, hysteresis

Setting range in bar	Max. working pressure in bar	Measuring principle	Hysteresis
0,2 … 2	60	Diaphragm	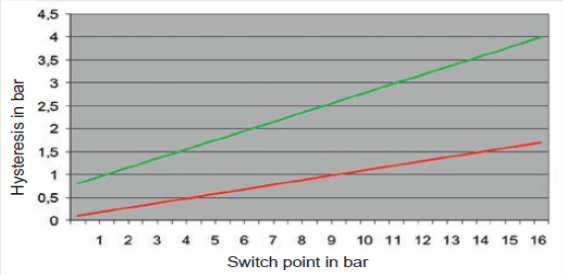 Example: With a switch point of 4 bar, a switch-back difference (hysteresis) of a minimum 0.5 bar to a maximum of 1.5 bar can be set.
0,5 … 8			
1 … 16			
10 … 30	350	Piston	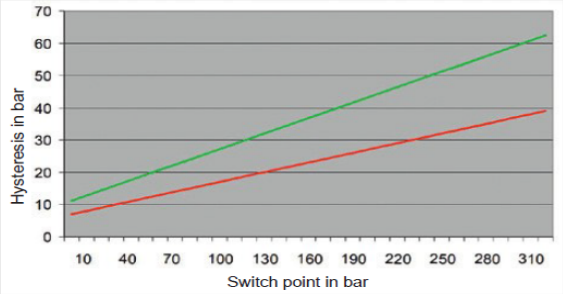 Example: With a switch point of 100 bar, a switch-back difference (hysteresis) of a minimum 18 bar to a maximum of 28 bar can be set.
10 … 80			
10 … 160			
20 … 250			
30 … 320			
40 … 400	420		

Electrical connection

M12 x 1 Cable

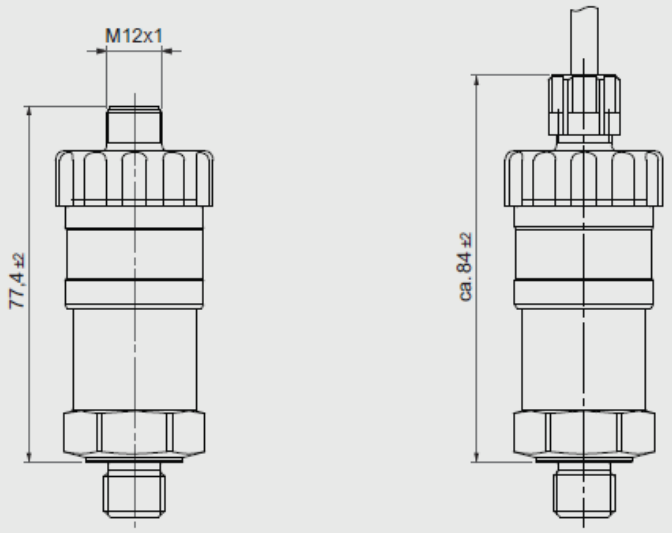

5- FLOW SWITCH – FS1

FS-380 Series – Compact Flow Switch for High Inline Pressures

Flow Rate Settings: 0.15 GPM to 2.00 GPM
Port Size: Multiple
Primary Construction Material: Brass or Stainless Steel
Setting Type: Fixed

These rugged inline flow switches require 100 micron filtration and are less susceptible to clogging than other high-pressure inline flow switches. The one-piece magnetic PPS composite piston makes the FS-380 ideal for high-pressure applications such as industrial cleaning equipment. The FS-380 is also an excellent choice for semicon cooling applications where simple design and reliable operation are required.

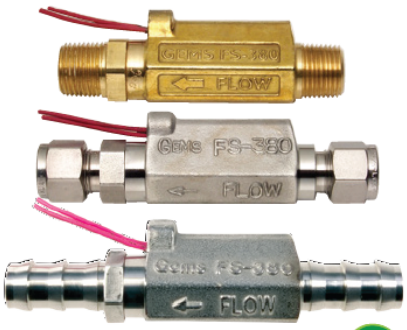

U.L. Recognized File No. E31926

Specifications

Wetted Materials	
Housing	Brass or 316 Stainless Steel
Piston	PPS Composite, Epoxy
Spring	316 Stainless Steel
O-Ring	Fluorocarbon
Operating Pressure, Maximum	1500 PSI (107 bar); 500 PSI (34 bar) for 1/2″ Barb Models
Operating Temperature	-20°F to +275°F (-28.8°C to +135°C)
Set Point Accuracy	±20% Maximum
Set Point Differential	20% Maximum
Switch*	SPST, 20VA, N.O. at no Flow
Electrical Termination	No. 22 AWG, 24″ to 26″ Polymeric leads

*See "Electrical Data" on Page X-5 for more information.

Spacing

To prevent sensor to sensor magnetic field interference, follow the spacing guidelines below.

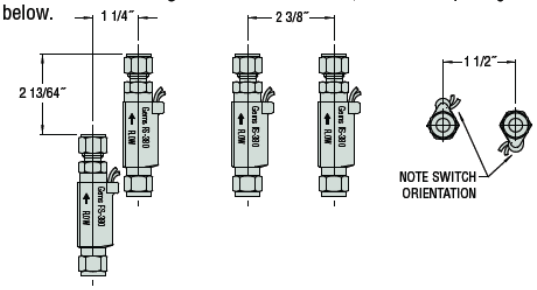

How To Order – Standard Models

Specify Part Number based on flow settings.

Flow Settings GPM[1]	Brass		Stainless Steel		
	1/2″ NPT Male	3/8″ NPT Male	3/8″ NPT Male	3/8″ Compression	1/2″ Barb
0.15	—	181130 ⚡	193482 ⚡	212136	239693
0.25	192562 ⚡	168432 ⚡	179992 ⚡	177592 ⚡	239692
0.50	192563	168433 ⚡	179993 ⚡	177593	239691
1.00	192564 ⚡	168434 ⚡	179994 ⚡	177594 ⚡	239690
1.50	192566	168435	179995 ⚡	177595 ⚡	239689
2.00	192567	178353 ⚡	179996	225525	239688

⚡ – Stock Items.

Note:
1. Flow settings are calibrated using water @ 70°F on increasing flow with units in horizontal position. Consult factory for other fluid compatibility.

Dimensions

inch (mm)

1/2″ Hose Barb Fitting

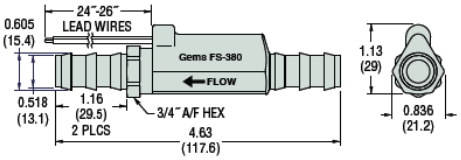

3/8″ Tube End Compression Fitting

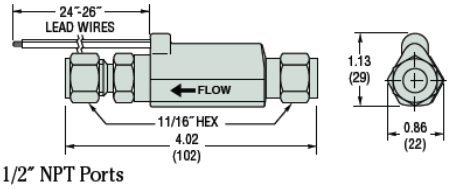

1/2″ NPT Ports

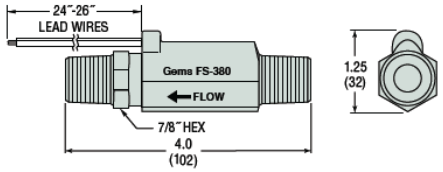

3/8″ NPT Ports

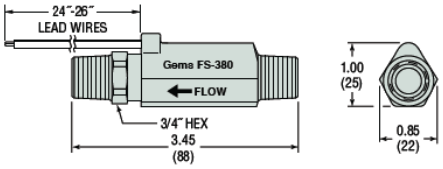

Pressure Drop – Typical

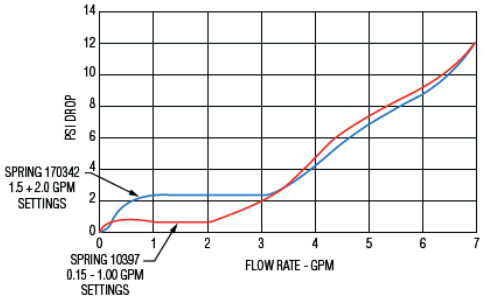

6- GAUGES, PRESSURE &VACUUM

MGS18

bourdon tube pressure gauges
all stainless steel construction
DS 4", 6" (100-150mm)

PED 2014/68/UE ATEX 2014/34/UE TP TC 012/2011

These instruments are designed for chemical, petrochemical industries and for conventional power plants. They are built to resist to the most severe conditions created by the process medium and by the environment and to operate with highly viscous and non-crystallizable fluids. The quality of the materials used to build the sensing element allows to use them in case of high frequency pulsating pressures.

The TIG welding between the case and the process socket strengthens the instrument and assures a better containment of the dampening fluid. The advantages of filling the case with a dampening fluid are: reduced pointer fluctuation, reduced wearing off of movement's rotating parts when pulsant vibrations and pulsations occur. Moreover, the dampening fluid prevents condensate and corrosive atmospheres from affecting the case and from damaging the internal components of the instrument.

1.18.1 - Standard Model

Design: EN837-1.
Safety designation: S1 as per EN 837-2.
Ranges: *from 0...15 to 0...30000 psi* (from 0...0,6 to 0...1600 bar or equivalent units).
Accuracy class: 1 as per EN 837-1.
Ambient temperature:
-4...+149 °F (-20...+65 °C), IP55 housing (EN 60529/IEC 529);
-63...+149 °F (-53...+65 °C), vented IP65/67 housing (EN 60529/IEC 529).
Process fluid temperature: *-40...+302 °F* (-40...+150 °C).
Thermal drift: ±0,4 %/10 °C of range (starting from *68°F* - 20°C).
Working pressure:
100% of FSV for static pressure;
90% of FSV for pulsating pressure.
Over pressure limit: 30% of FSV (max 12 hours).
Socket material: AISI 316L st.st.
Bourdon tube, seamless tube: AISI 316L st.st. for pressure ranges up to *20000 psi* (0...1000 bar); Duplex st.st for range ≥ *20000 psi* (0...1600 bar)
Case and ring: stainless steel.
Window: tempered glass.
Movement: stainless steel with internal limit stops for minimum and maximum pressure.
Dial: aluminium, white with black markings.
Pointer: adjustable, aluminium, black.

1.18.2 - Fillable Model

Ambient temperature: *-4...+149 °F* (-20...+65 °C), IP65/67 housing (EN 60529/IEC 529).
Pointer: not adjustable, aluminium, black.
Other features: as Standard Model.

1.18.3 - Filled Model

Ranges: *from 0...15 to 0...30000 psi* (from 0...1 to 0...1600 bar or equivalent units).
Damping liquid: glycerine 98% or silicon oil.
Ambient temperature:
+32...+149 °F (0...+65 °C) with glycerine filling;
-4...+149 °F (-20...+65 °C) with silicon oil fluid filling.
Process fluid temperature: *max +149°F* (+65 °C).
Protection degree: IP65/67 as per EN 60529/IEC 529.
Pointer: not adjustable, aluminium, black.
Other features: as Standard Model.

INSTRUMENTS FOR OXYGEN

To suit safety criteria of standard EN837-1/2, the pressure gauges for oxygen service must be solid-front type (with baffle wall and safety bursting back).
Pressure gauges suitable for this service are detailed on MGS20 DS 4", 6" (100-150 mm) sheet.

bourdon tube pressure gauges
all stainless steel construction, DS 4", 6" (100-150mm)

MGS1

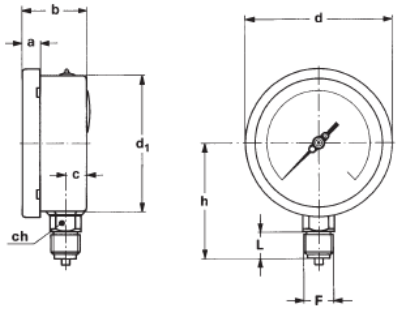

A - LOWER CONNECTION

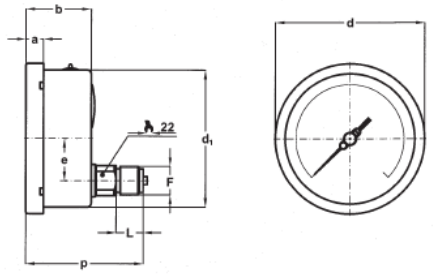

D - BACK CONNECTION

Mounting	DS	F	a	b	c	d	d_1	e	h	p	L	Weight (1)
Lower	E 4" (100)	41M - G 1/2 A 43M - 1/2-14 NPT	0.51" (13)	1.90" (48,5)	0.59" (15)	4.35" (110,5)	3.97" (101)		3.38" (86)		0.78" (20)	1.16 lbs (0,53 kg)
	G 6" (150)	41M - G 1/2 A 43M - 1/2-14 NPT	0.59" (15)	1.96" (50,5)	0.61" (15,5)	6.33" (161)	5.88" (149,6)		4.60 (117)		0.78" (20)	2.09 lbs (0,95 kg)
Back	E 4" (100)	41M - G 1/2 A 43M - 1/2-14 NPT	0.51" (13)	1.90" (48,5)		4.35" (110,5)	3.97" (101)	1.22" (31)		3.21" (81,5)	0.78" (20)	1.17 lbs (0,53 kg)
	G 6" (150)	41M - G 1/2 A 43M - 1/2-14 NPT	0.59" (15)	1.96" (50,5)		6.33" (161)	5.88" (149,5)	1.22" (31)		3.19" (81)	0.78" (20)	1.87 lbs (0,85 kg)

dimensions : *inches* (mm)

(1) add 0.72 lbs (0,33 kg) for DS 4" (100) and 1.65 lbs (0,78 kg) for DS 6" (150), when filled

Standards	EN 837-1
Nominal size	DN100
Connections	½" NPT
Window	Tempered glass
Case filling	Glycerine 98%
Ambient temperature range	0ºC to + 65ºC
Accuracy class	Class 1 as per EN 837-1
Ingress protection	IP67 (IEC 529)
Scale range - Manometer	0 to +8 Bar
Scale range – Vacuum meter	-1 to +3 Bar
Scale units	Bar – Kgf/cm²
Weight	0,6 Kg.

7- TFT DISPLAY IN CONTROL PANEL

SIEMENS

Data sheet **6AG1123-2DB03-2AX0**

Figure similar

SIPLUS HMI KTP400 Basic Color PN -20...+60°C with conformal coating based on 6AV2123-2DB03-0AX0 . 4" TFT display, 65536 colors PROFINET" interface

General information	
Product type designation	KTP400 Basic color PN
Display	
Design of display	TFT widescreen display, LED backlighting
Screen diagonal	4.3 in
Display width	95 mm
Display height	53.9 mm
Number of colors	65 536
Resolution (pixels)	
• Horizontal image resolution	480 pixel
• Vertical image resolution	272 pixel
Backlighting	
• MTBF backlighting (at 25 °C)	20 000 h
• Backlight dimmable	Yes
Control elements	
Keyboard fonts	
• Function keys	
— Number of function keys	4
— Number of function keys with LEDs	0
• Keys with LED	No
• System keys	No
• Numeric keyboard	Yes; Onscreen keyboard
• alphanumeric keyboard	Yes; Onscreen keyboard
Touch operation	
• Design as touch screen	Yes
Installation type/mounting	
Mounting in portrait format possible	Yes
Mounting in landscape format possible	Yes
maximum permissible angle of inclination without external ventilation	35°
Supply voltage	
Type of supply voltage	24 V DC
Rated value (DC)	24 V
permissible range, lower limit (DC)	19.2 V
permissible range, upper limit (DC)	28.8 V
Input current	
Current consumption (rated value)	125 mA
Starting current inrush I^2t	0.2 $A^2 \cdot s$

Power	
Active power input, typ.	3 W
Processor	
Processor type	ARM
Memory	
Flash	Yes
RAM	Yes
Memory available for user data	10 Mbyte
Type of output	
Acoustics	
• Buzzer	Yes
• Speaker	No
Time of day	
Clock	
• Hardware clock (real-time)	Yes
• Software clock	Yes
• retentive	Yes
• synchronizable	Yes
Interfaces	
Number of industrial Ethernet interfaces	1
Number of RS 485 interfaces	0
Number of RS 422 interfaces	0
Number of RS 232 interfaces	0
Number of USB interfaces	1; Up to 16 GB
Number of 20 mA interfaces (TTY)	0
Number of parallel interfaces	0
Number of other interfaces	0
Number of SD card slots	0
With software interfaces	No
Industrial Ethernet	
• Industrial Ethernet status LED	2
Protocols	
PROFINET	Yes
Supports protocol for PROFINET IO	No
IRT	No
PROFIBUS	No
MPI	No
Protocols (Ethernet)	
• TCP/IP	Yes
• DHCP	Yes
• SNMP	Yes
• DCP	Yes
• LLDP	Yes
WEB characteristics	
• HTTP	No
• HTML	No
Further protocols	
• CAN	No
• EtherNet/IP	Yes
• MODBUS	Yes; Modicon (MODBUS TCP/IP)
Interrupts/diagnostics/status information	
Diagnoses	
• Diagnostic information readable	No
EMC	
Emission of radio interference acc. to EN 55 011	
• Limit class A, for use in industrial areas	Yes
• Limit class B, for use in residential areas	No
Degree and class of protection	
NEMA (front)	

8- MONITOR – 15PPM BILGE ALARM

This Bilge Alarm Monitor has been designed for installation in Bilge Water Separator with a post-treatment stage, according to the IMO Resolution MEPC 107(49).

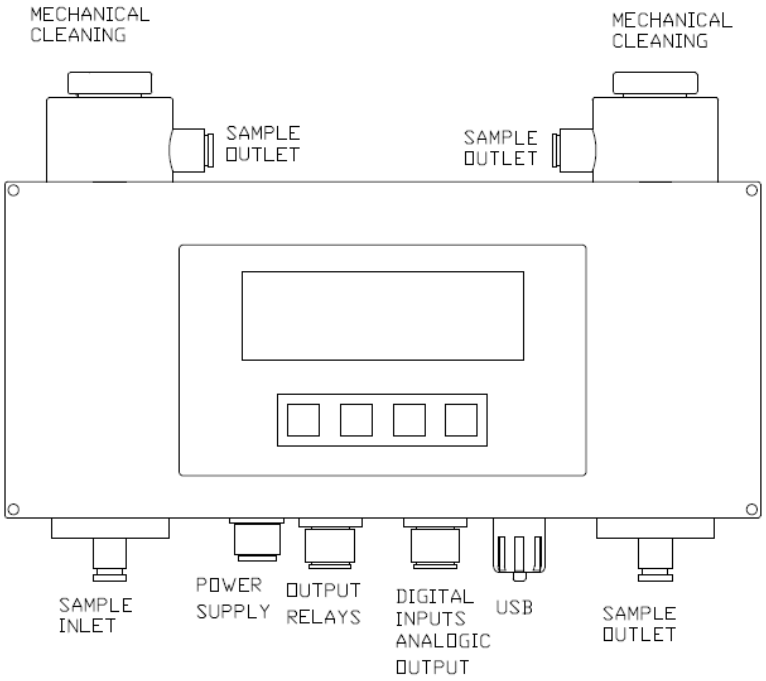

Monitor external distribution.

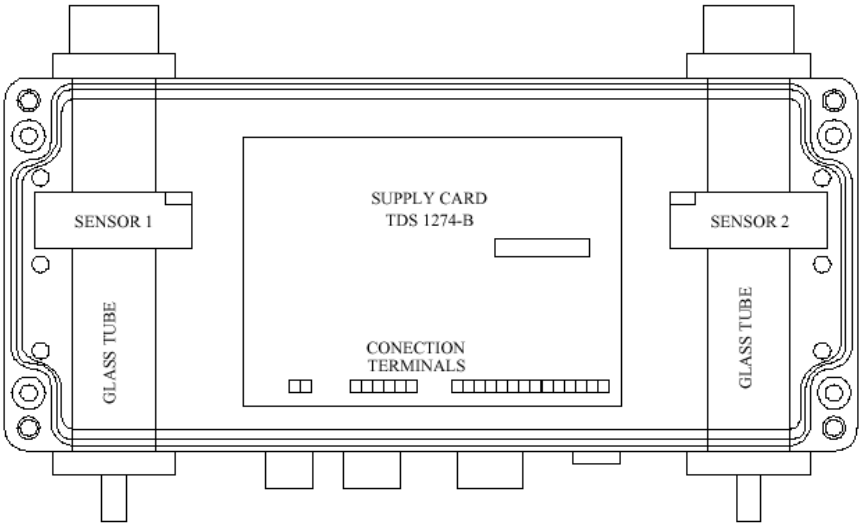

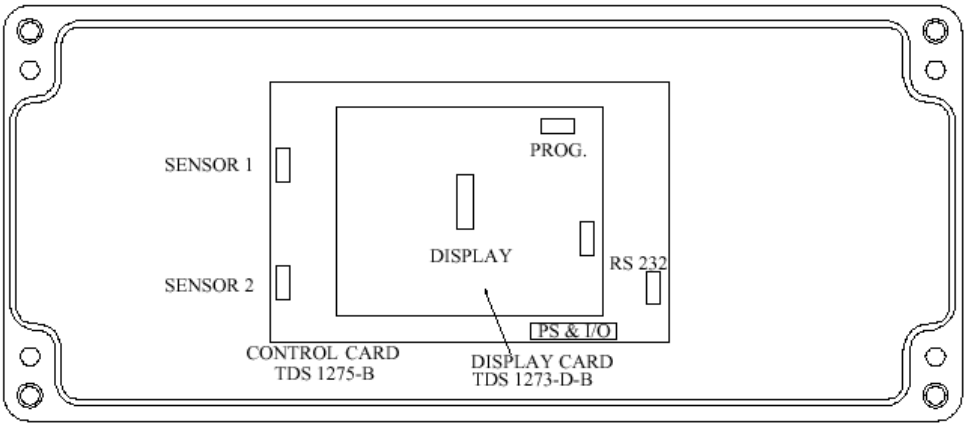

Monitor Internal distribution.

MODEL	DYNAMIC DOM-107
Range	0-30 ppm
Case material	Cast aluminium
Accuracy	According to IMO MEPC. 107(49)
Display	Three digits 15 mm red. 8 led 5 mm digital inputs. 4 led 5 mm various indication.
Power Supply	Alternating Current 220Vca, 50/60 Hz, 14VA 115Vca, 50/60 Hz, 14VA Tolerance+/- 15% Direct Current 24Vcc 10W Tolerance+/- 10%
Digital input Signals	24Vcc, isolated Quantity6 for registry Type:PNP Transistor
Alarm 1	Adjustable between 1-15ppm Cell 1 (12 ppm by default)
Alarm 2	Adjustable between 1-15ppm Cell 2 (15 ppm by default)
Output Signals	Three relays, contact NC. Relay 1instantaneous alarm 1 Relay 2instantaneous alarm 2 Relay 3delayed alarm 2 (adjustable time) Breaking capacity4 A, 220Vca resistive load 2 A, inductive load, FP 0,8 Analogic, 4-20mA
Sample pressure	0,1 to 5 bar.
Sample's rate of flow	0,5 to 6 l/min
Dimensions	360x160x90 mm
Degree of protection	IP 65
Weight	6 Kg
Sample connection	R1/4" Female.

9- SOLENOID VALVES – VS8, VS5, VS6, VS16, VS17

ASCO JOUCOMATIC

SOLENOID VALVES

ISO 15218 (CNOMO, size 30) interface
direct operated, pad mounting body
subbases for instant fittings or 1/8 thread

NC
NO

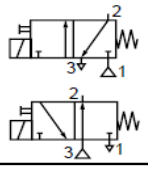

3/2
Series
189

FEATURES

- *CNOMO pad-mount version for valve piloting applications*
- *Compact size and low weight for easy installation on single or joinable subbases*
- *AC/DC interchangeability of the solenoid operator without any need for disassembly of the valve*
- *Version with M12 connection with visual indication and peak voltage suppression conforming to "UL" standards*
- *Flexible installation on joinable subbases*
- *Manual operator as standard*
- *The solenoid valves satisfy all relevant EC Directives*

GENERAL

Differential pressure See "SPECIFICATIONS" [1 bar =100 kPa]
Response time 5 - 10 ms

fluids (*)	temperature range (TS)	seal materials (*)
air, inert gas	- 10°C to + 60°C	NBR (nitrile)

MATERIALS IN CONTACT WITH FLUID

(*) Ensure that the compatibility of the fluids in contact with the materials is verified

Body PA, glass-filled
Core tube Stainless steel
Core and plugnut Stainless steel
Internal parts, springs Stainless steel
Seals NBR
Shading coil Copper

CONSTRUCTION

Mounting pad ISO 15218 (CNOMO 06-05-80 / NF E 49066, size 30)

ELECTRICAL CHARACTERISTICS

Coil insulation class F
Connector Spade plug (cable Ø 6-8 mm) or M12
Connector specification DIN 43650, 11 mm, industry standard B or CNOMO E03.62.520.N (M12)
Electrical safety IEC 335
Electrical enclosure protection Moulded IP65 (EN 60529)
Standard voltages DC (=): 24V - 48V (M12: 24 V + LED and protection)
(Other voltages and 60 Hz on request) AC (~): 24V - 48V - 115V - 230V / 50 Hz

-	power ratings				operator ambient temperature range (TS)	replacement coil		type (1)
	inrush ~	holding ~		hot/cold =		~	=	
	(VA)	(VA)	(W)	(W)	(C°)	230 V/50 Hz	24 V DC	
-	6	3,5	2,5	2,5 / 3	-10 to + 60	43004422	43004166	01
						-	43005523	06

(1) Refer to the dimensional drawings on the following page.

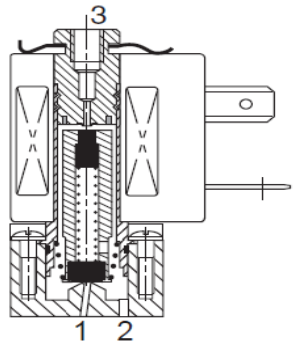

NC function

SPECIFICATIONS

pipe size	orifice size		flow coefficient Kv				operating pressure differential (bar)			power coil (W)		catalogue number	
							min.	max. (PS) air (*)				with maintained manual operator	
	1→2	2→3	1→2		2→3							DIN connector	M12 connection
	(mm)	(mm)	(m³/h)	(l/min)	(m³/h)	(l/min)		~	=	~	=	~/=	=
NC - Normally closed													
pad mounting (2)	1,2	1,5	0,042	0,07	0,048	0,8	0	10	10	2,5	3	18900001	-
										-	3	-	18900073
NO - Normally open													
pad mounting (2)	1,2	1,5	0,042	0,07	0,036	0,6	0	6 (5)	6 (5)	2,5	3	18900010	-
										-	3	-	18900075

SUBBASES

pipe size	description	composition	catalogue number
6/6 polyamide subbases			
Instant fittings(3)	single subbase (instant fittings OD 4 mm)		35300069
	joinable subbase (instant fittings OD 4 mm)		35300070
	set of 2 joinable end subbases, right-hand pressure intake, endpieces with instant fittings OD 6 mm	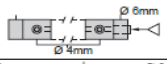	35300071
	set of 2 joinable end subbases, right-hand and/or left-hand pressure intake, endpieces with instant fittings OD 6 mm	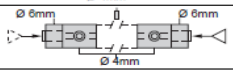	35300072 (4)
Zamak subbases			
G 1/8 (3) tapped	laterally-connected single subbase		35300047
	laterally-connected joinable subbase		35300048

INFORMATION:

Normally closed, solenoid valve	
Pipe size	M5 (DIN 43650)
Valve Material	Body: Polyamide Internals: Stainless steel
Subbase Material	Zamak
Flow coefficient KV	0,042 m³/h to 0,048 m³/h
Operating differential pressure – Min	0 Bar
Operating differential pressure – Máx	10 Bar
Insulation class	F
Electrical Safety	IEC 335
Enclosure Protection	IP65
Voltage	230V
Ambient temperature range	-10ºC to +60ºC

10- SOLENOID VALVE – VS18

2/2 NORMALLY CLOSED – PILOT OPERATED - 3/8 NPT ÷ 1 NPT

L182-NPT

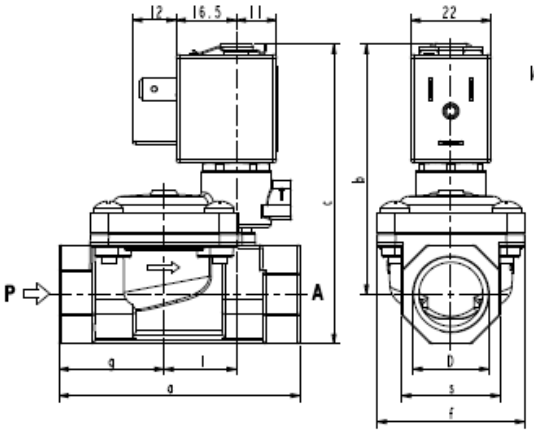

D	a	b	c	f	g	l	s
3/8 NPT	60	66	77	40	25,5	20	22
1/2 NPT	66	68	82	40	29	20	27
3/4 NPT	79	72,5	89	50	35,5	24,5	33
1 NPT	105	85	106	71	46	28	42

General Features

Diaphragm valve, pilot operated, having full orifice.
Suitable to shut off liquid and gaseous fluids (verify the compatibility of fluid with material in contact).

Technical Features				
Maximum allowable pressure (PS)	20 bar			
Response times	3/8	1/2	3/4	1
Opening time (ms)	70	70	70	90
Closing time (ms)	670	600	500	420
Fluid temperature	-10°C +90°C (NBR) 0°C +130°C (FPM) -10°C +140°C (EPDM)			
Max viscosity	5°E (~37 cStokes or mm²/s)			

Materials in Contact with Fluid	
Body	Stainless steel AISI 316L
Sealing	NBR or FPM or EPDM
Internal components	Stainless steel
Seat	Stainless steel AISI 316L
Core tube	Stainless steel
Shading coil	Copper

Coil		ZB12A	ZB14A
Approval		UL and CSA	
Encapsulation material		PET fiberglass reinforced	
Insulation class		F (155°C)	H (180°C)
Ambient temperature		-10°C +60°C	-10°C +75°C
Continuous duty		ED 100%	
Electric connection		DIN 46340 - 3 poles plug connector	
Protection degree		IP 67 (EN 60529) with plug connector	
Voltages	DC	12-24V (+10% -5%)	
	AC	24V/50-60Hz - 115V/50Hz - 230V/50-60Hz (+10% -15%)	
		(Other voltages and frequencies on request)	

On request		ZB12Y	ZB14Y
Approval		UL	
Voltages	AC	220-230V/50Hz 208-240V/60Hz (+10% -15%)	

Port size NPT	Orifice size (mm)	Differential pressure (bar)					Kv (m³/h)	Series and type			Power absorption				Sealings	Notes	Weight (kg)
		Δp min	Δp max								AC (VA)			DC			
			Gases		Liquids			Valve	Valve with manual override	Coil	Inrush	Holding					
			AC	DC	AC	DC					VA	VA	W	W			
3/8	13,5	0,35	16 (12)	16 (12)	16 (12)	16 (12)	2,5	L182(*)11	L182(*)12	ZB12A	12	6	4	5,5	(*) = B (NBR) (*) = V (FPM) (*) = D (EPDM)	1-3	0,30
1/2							3,8										0,35
3/4	18		12 (10)	12 (10)	12 (10)	12 (10)	5									2-3	0,50
1	24						12										1,09

Notes

- Sealings: B(NBR) = Nitrile-butylene elastomer V(FPM) = Fluoro-carbon elastomer
  D(EPDM)=Ethylene-propylene elastomer (WRAS/KTW certified compound)
- Operation with gaseous media, at high pressure without any outlet restriction, can reduce the diaphragm life.
- On request coil in class H (ZB14A – see § "COIL")
- The bracketed values of Δp max are related to valves with FPM seals.

1 - Low power consumption coil on request ZB12C or ZB14C (3,5 VA in AC – 3W in DC): Δp max = 12 bar
2 - Low power consumption coil on request ZB12C or ZB14C (3,5 VA in AC – 3W in DC): Δp max = 8 bar
3 - L182D11 – L182D12: Product under recertification process WRAS.

1605/2002