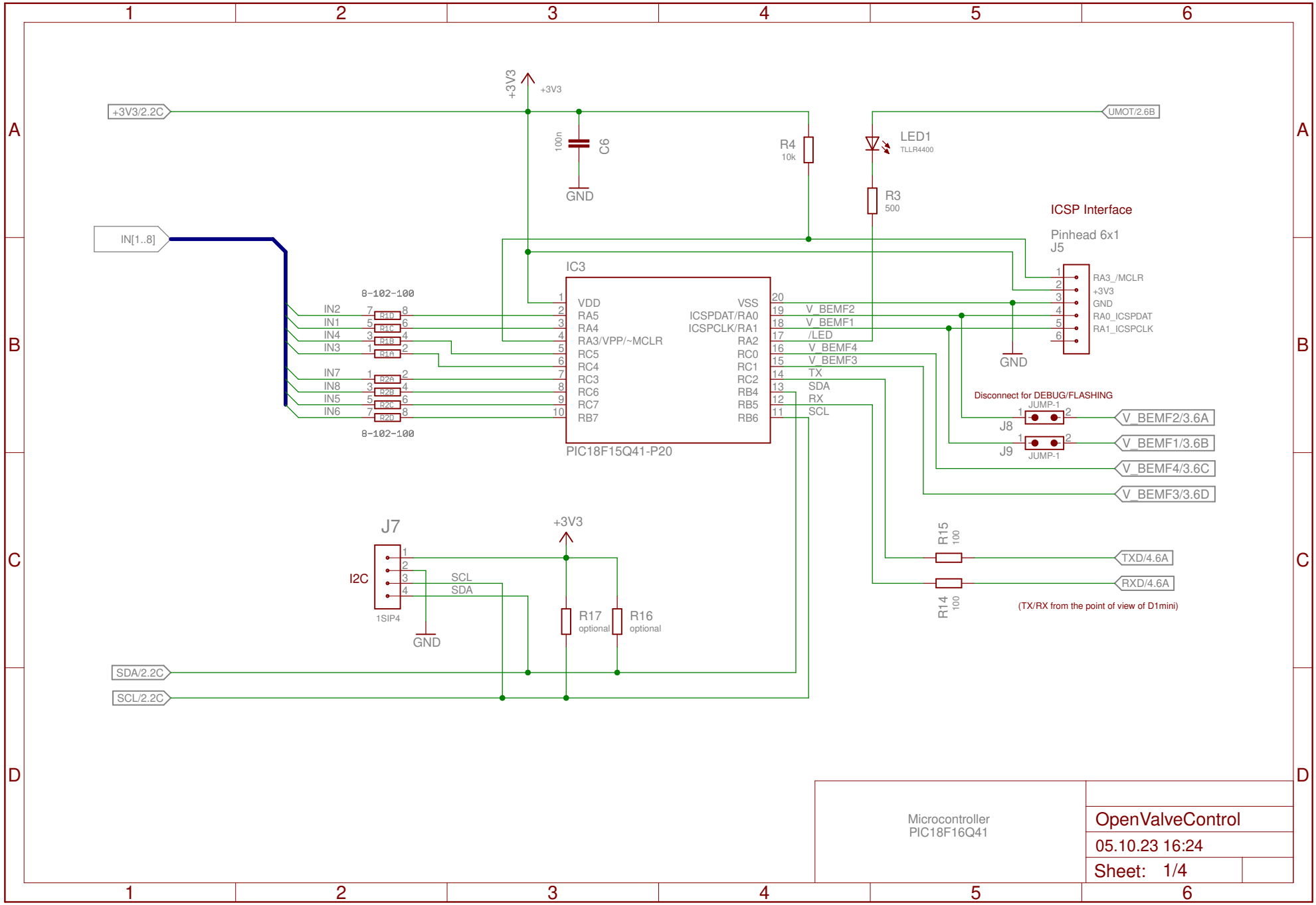
+3V3/2.2C
+3V3
C6
100n
GND
R4
10k
LED1
TLLR4400
R3
500
UMOT/2.6B
IN[1..8]
IC3
PIC18F15Q41-P20
VDD
RA5
RA4
RA3/VPP/~MCLR
RC5
RC4
RC3
RC6
RC7
RB7
VSS
ICSPDAT/RA0
ICSPCLK/RA1
RA2
RC0
RC1
RC2
RB4
RB5
RB6
V_BEMF2
V_BEMF1
/LED
V_BEMF4
V_BEMF3
TX
SDA
RX
SCL
8-102-100
IN2
IN1
IN4
IN3
IN7
IN8
IN5
IN6
R1D
R1C
R1B
R1A
R2A
R2B
R2C
R2D
ICSP Interface
Pinhead 6x1
J5
RA3_/MCLR
+3V3
GND
RA0_ICSPDAT
RA1_ICSPCLK
Disconnect for DEBUG/FLASHING
JUMP-1
J8
J9
V_BEMF2/3.6A
V_BEMF1/3.6B
V_BEMF4/3.6C
V_BEMF3/3.6D
J7
I2C
1SIP4
SCL
SDA
R17
optional
R16
optional
R15
100
R14
100
TXD/4.6A
RXD/4.6A
(TX/RX from the point of view of D1mini)
SDA/2.2C
SCL/2.2C
Microcontroller
PIC18F16Q41
OpenValveControl
05.10.23 16:24
Sheet: 1/4

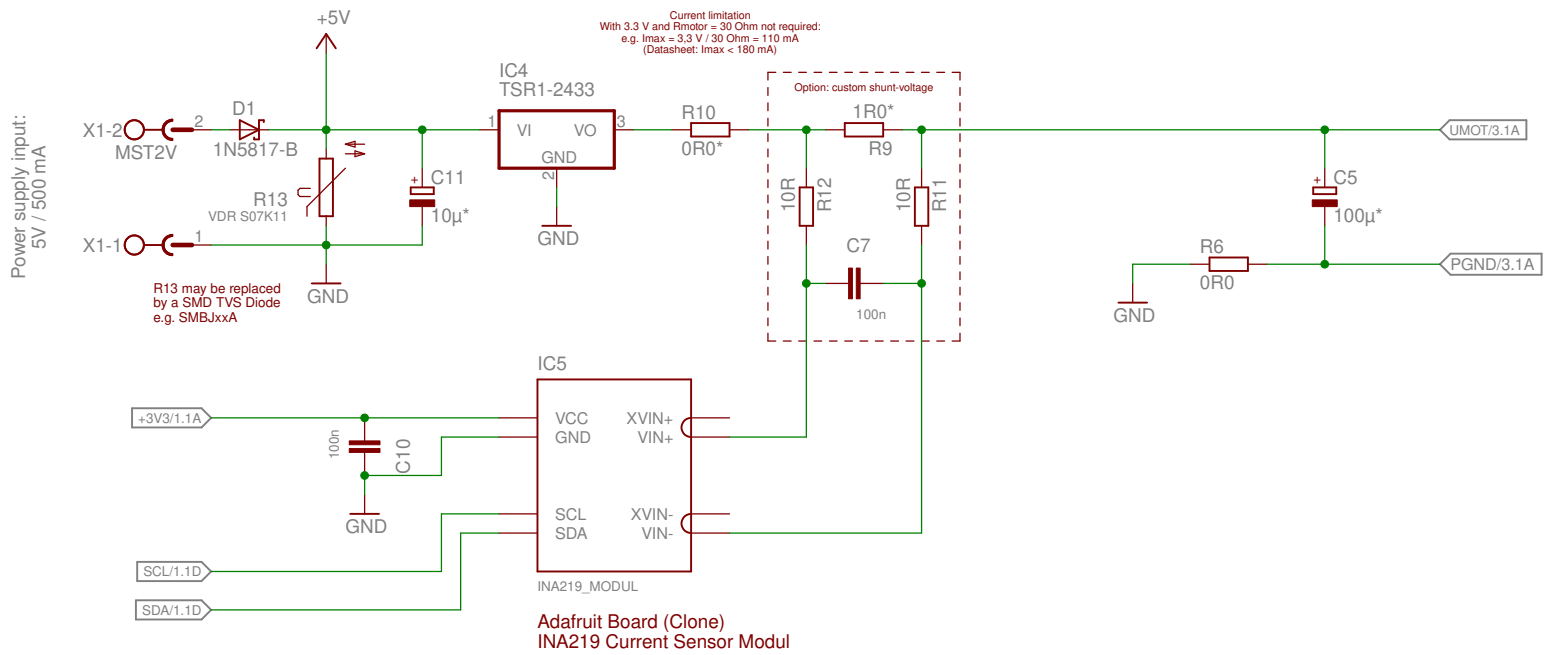

Adafruit Board (Clone)
INA219 Current Sensor Modul

Power Supply +
Current Sense Modul INA219

OpenValveControl

05.10.23 16:24

Sheet: 2/4

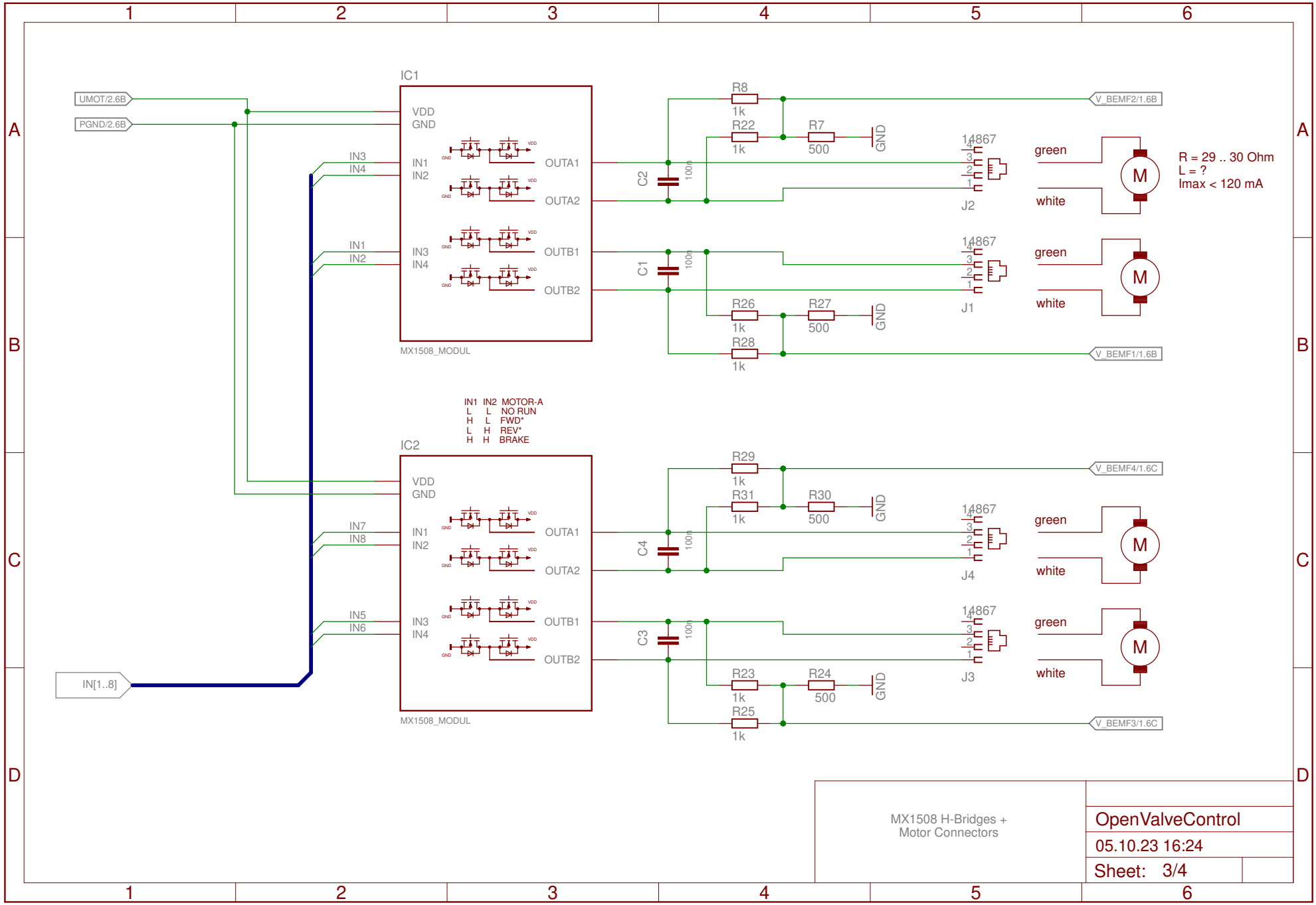
UMOT/2.6B
PGND/2.6B
IC1
VDD
GND
IN1
IN2
IN3
IN4
OUTA1
OUTA2
OUTB1
OUTB2
MX1508_MODUL
IN3
IN4
IN1
IN2
C2
C1
100n
R8
1k
R22
1k
R7
500
GND
R26
1k
R27
500
R28
1k
V_BEMF2/1.6B
V_BEMF1/1.6B
J2
J1
green
white
M
R = 29 .. 30 Ohm
L = ?
Imax < 120 mA
IN1 IN2 MOTOR-A
L L NO RUN
H L FWD*
L H REV*
H H BRAKE
IC2
IN7
IN8
IN5
IN6
C4
C3
R29
1k
R31
1k
R30
500
R23
1k
R24
500
R25
1k
V_BEMF4/1.6C
V_BEMF3/1.6C
J4
J3
IN[1..8]
MX1508 H-Bridges +
Motor Connectors
OpenValveControl
05.10.23 16:24
Sheet: 3/4

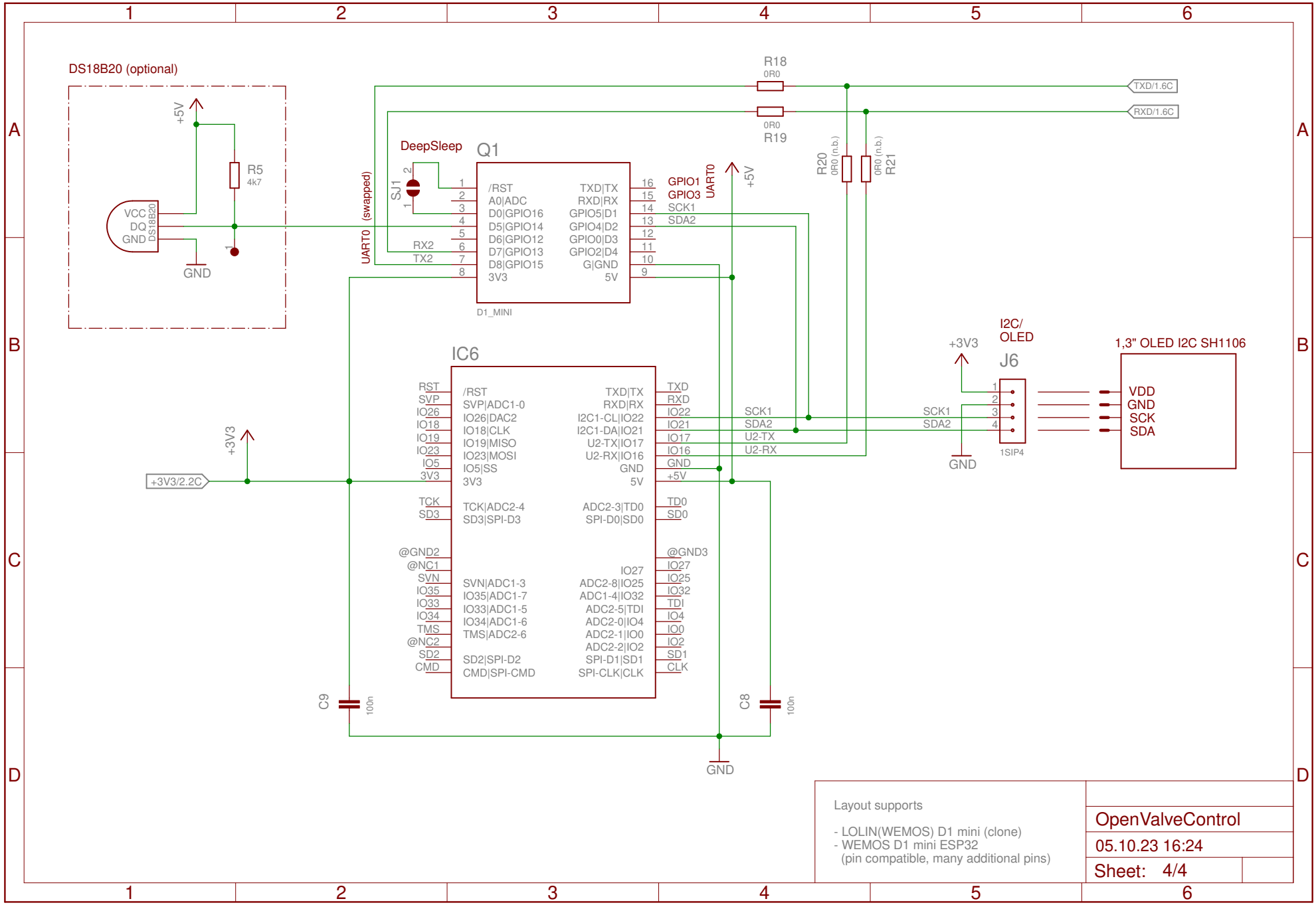

Layout supports

- LOLIN(WEMOS) D1 mini (clone)
- WEMOS D1 mini ESP32
  (pin compatible, many additional pins)

OpenValveControl

05.10.23 16:24

Sheet: 4/4