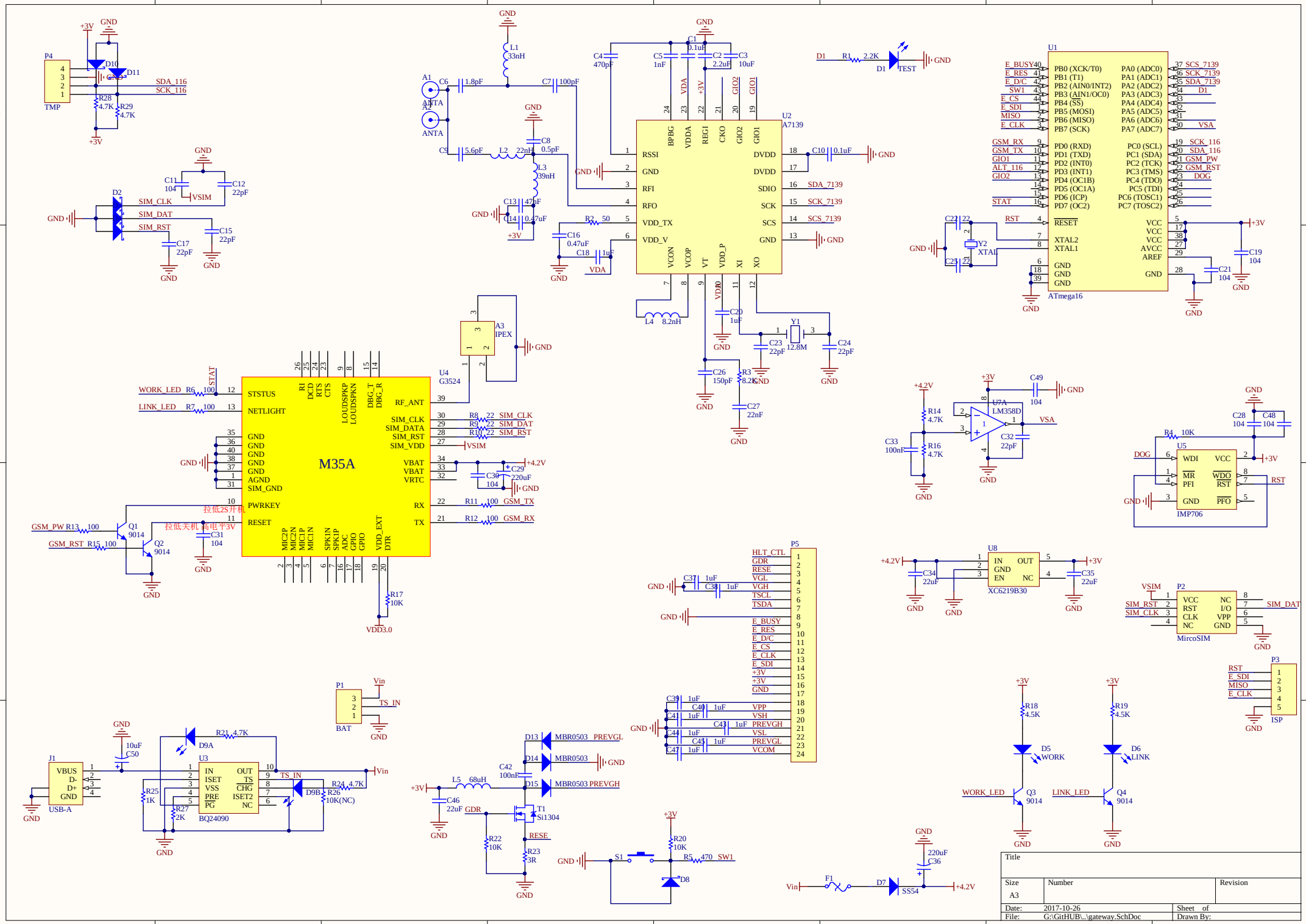

Title		
Size A3	Number	Revision
Date: 2017-10-26		Sheet of
File: G:\GitHUB\..\gateway.SchDoc		Drawn By: