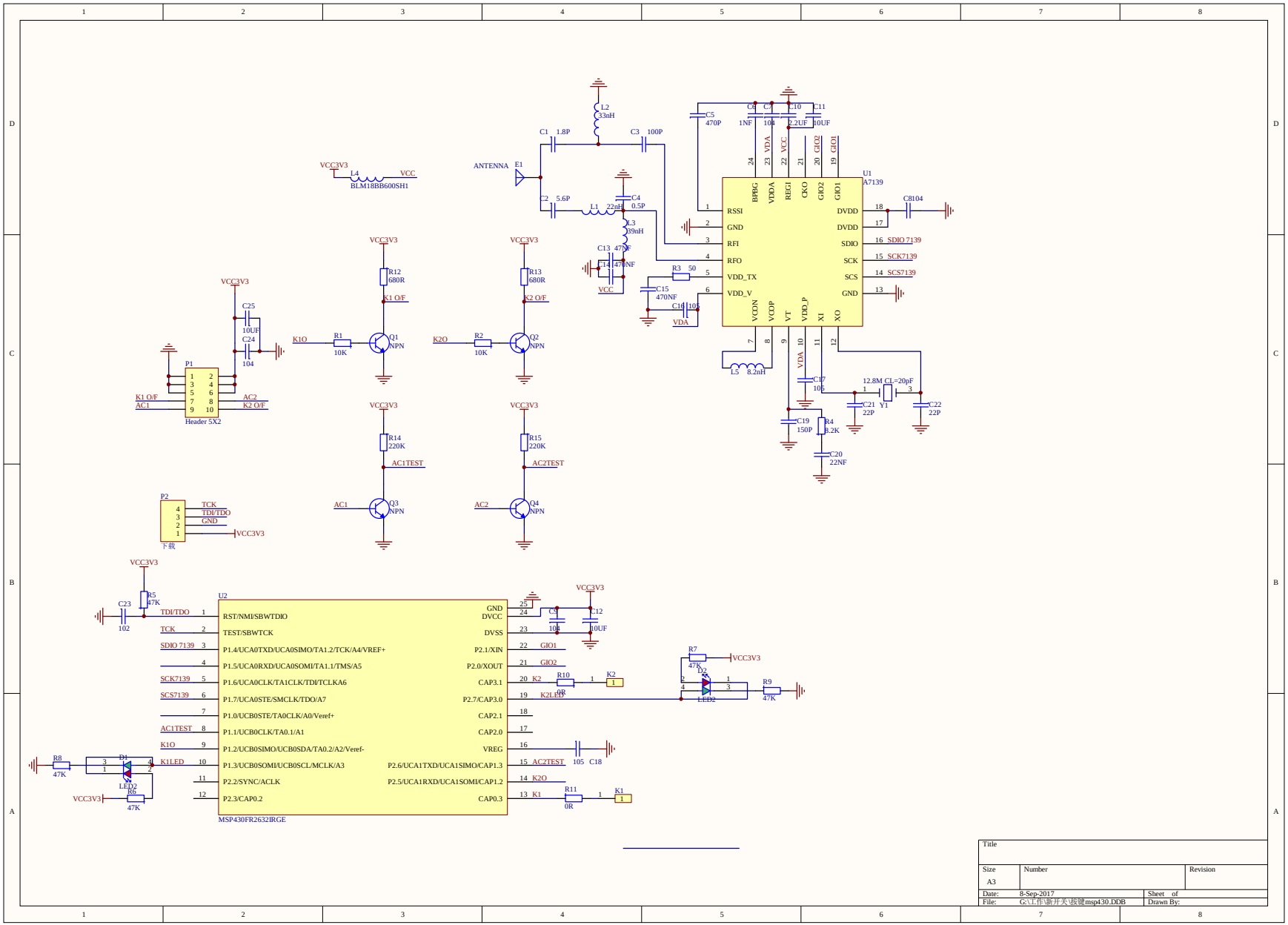

Title		
Size A3	Number	Revision
Date: 8-Sep-2017		Sheet of
File: G:\工作\新开关\按键msp430.DDB		Drawn By: