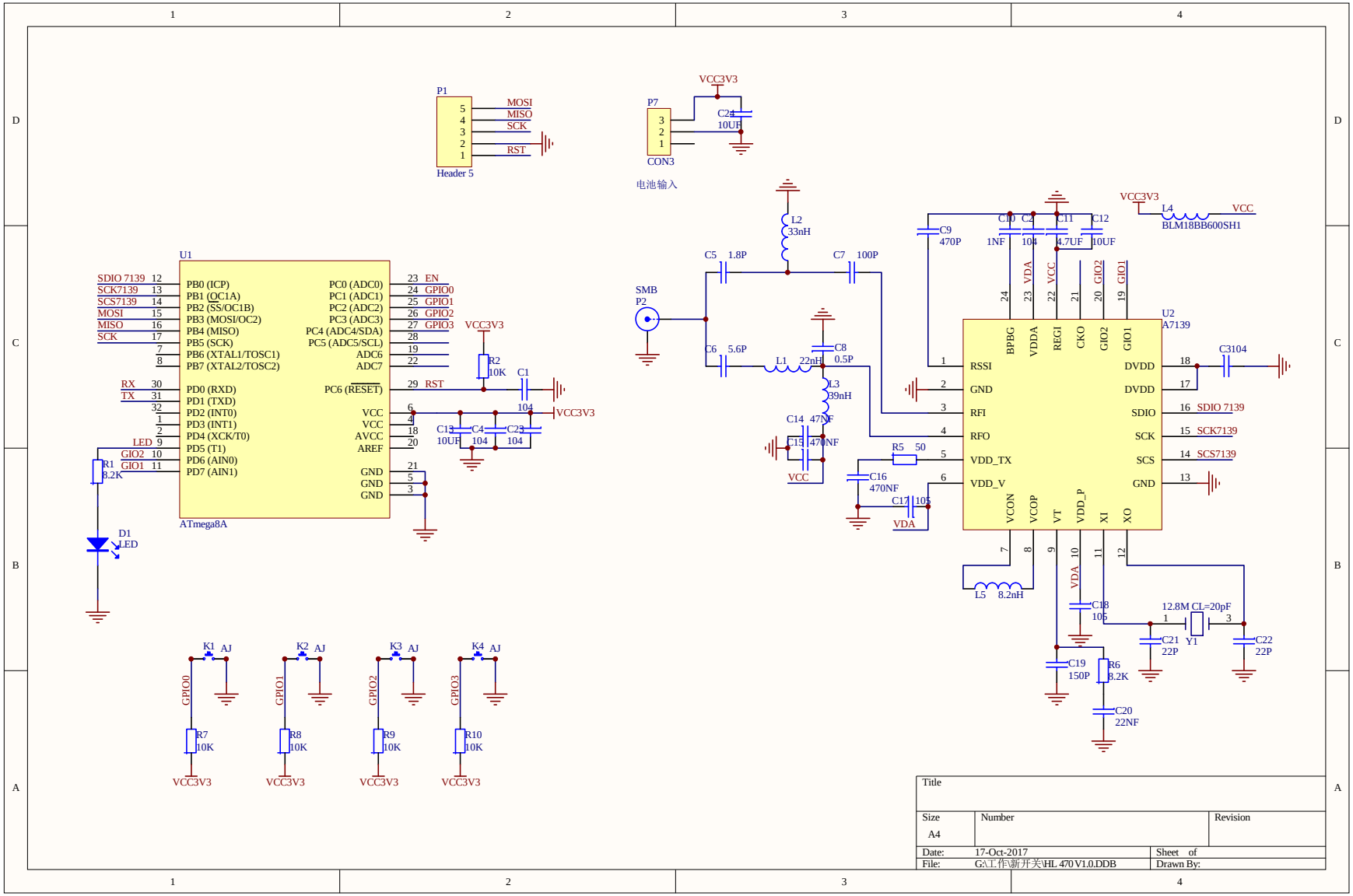

Title			
Size A4	Number		Revision
Date: 17-Oct-2017		Sheet of	
File: G:\工作\新开关\HL 470 V1.0.DDB		Drawn By:	