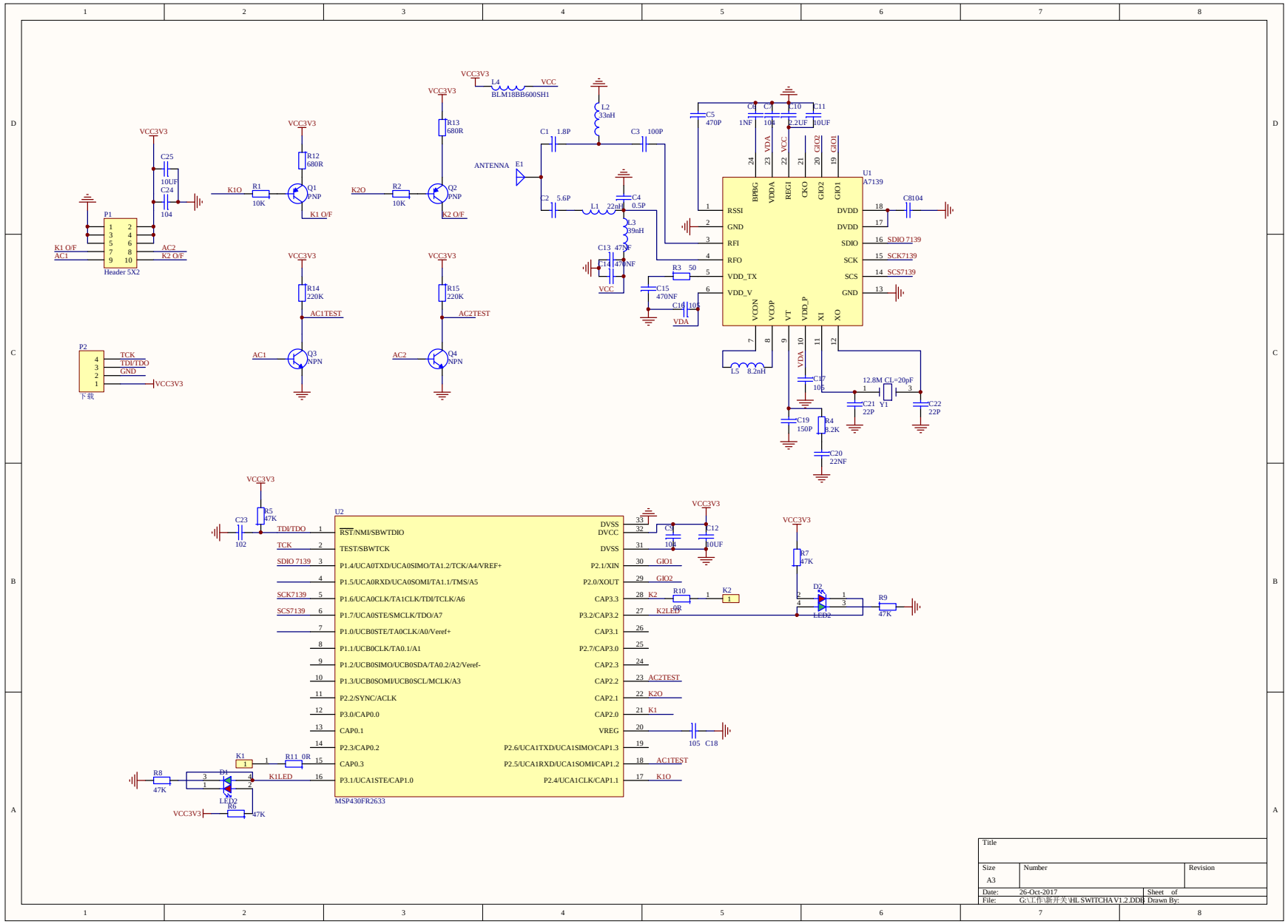

Title		
Size A3	Number	Revision
Date: 26-Oct-2017	Sheet of	
File: G:\工作\新开关\HL SWITCHA V1.2.DDB	Drawn By:	