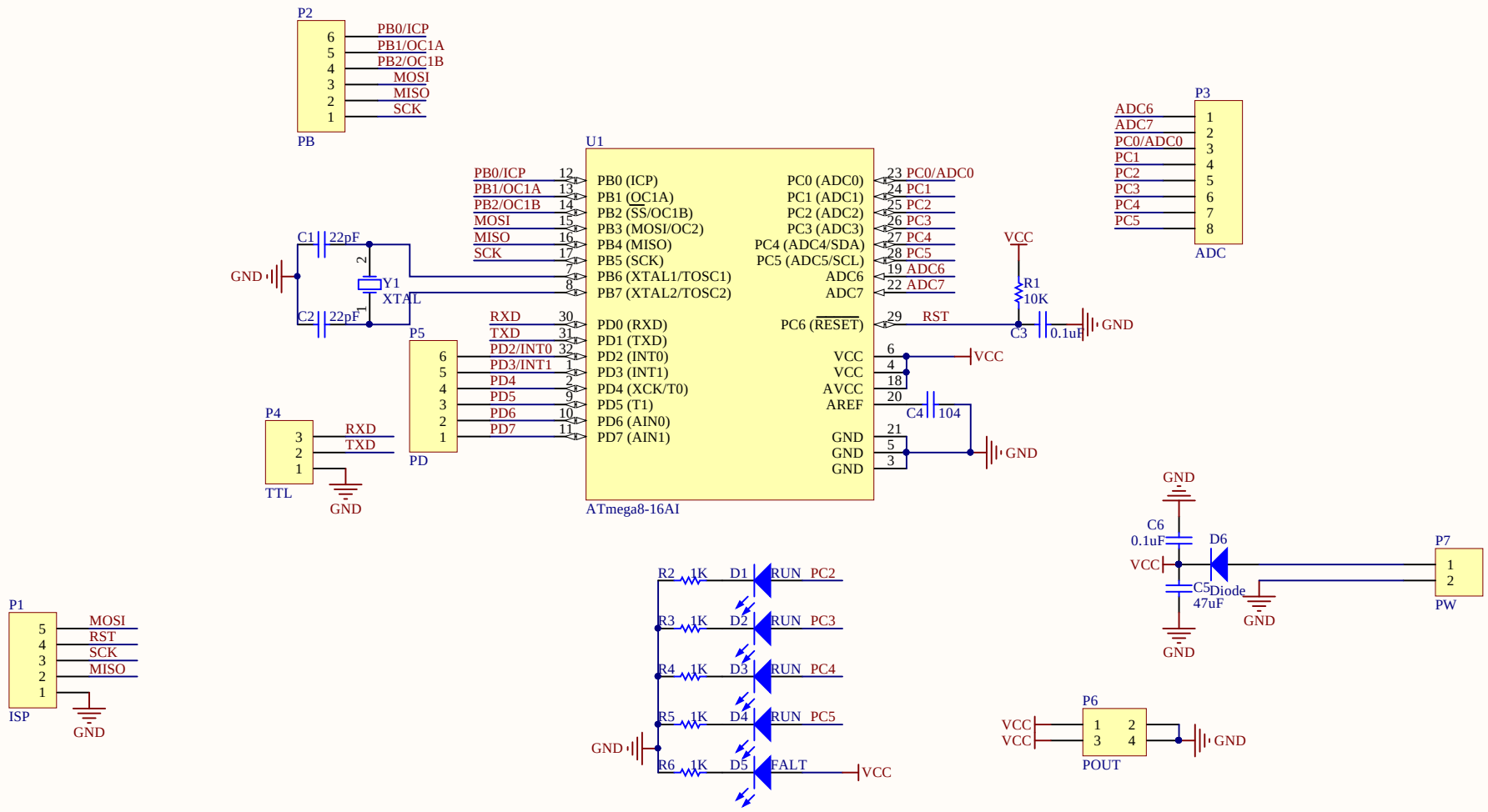

Title		
Size A4	Number	Revision
Date: 2017-11-16	Sheet of	
File: G:\GitHUB\test\M48_CORE\M48_CORE.SchDoc	Drawn By:	