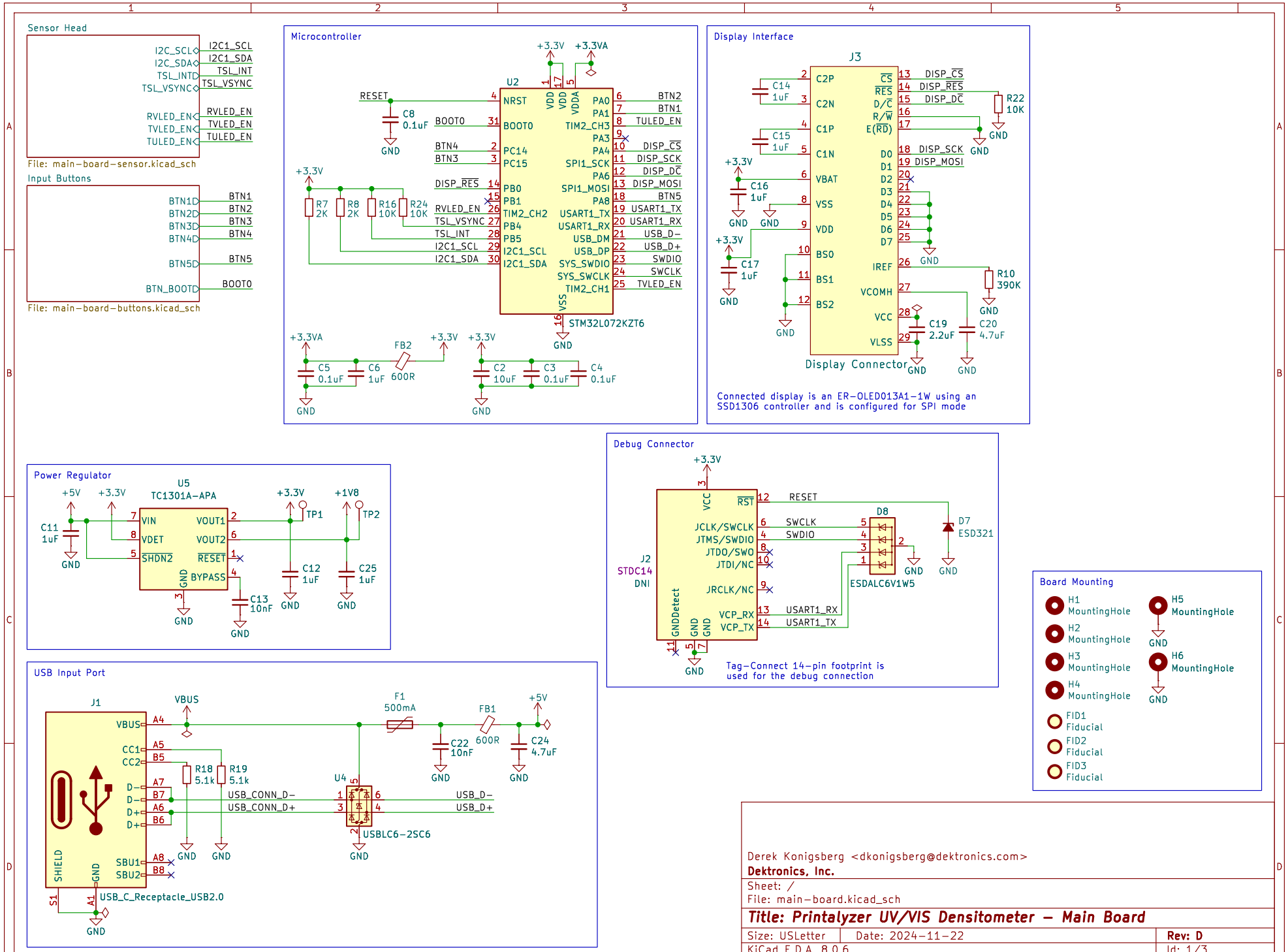
Sensor Head
I2C_SCL
I2C_SDA
TSL_INT
TSL_VSYNC
RVLED_EN
TVLED_EN
TULED_EN
File: main-board-sensor.kicad_sch
Input Buttons
BTN1D
BTN2D
BTN3D
BTN4D
BTN5D
BTN_BOOTD
BTN1
BTN2
BTN3
BTN4
BTN5
BOOT0
File: main-board-buttons.kicad_sch
Microcontroller
U2
STM32L072KZT6
RESET
C8 0.1uF
BOOT0
BTN4
BTN3
DISP_RES
RVLED_EN
TSL_VSYNC
TSL_INT
I2C1_SCL
I2C1_SDA
R7 2K
R8 2K
R16 10K
R24 10K
+3.3V
+3.3VA
PA0 BTN2
PA1 BTN1
TIM2_CH3 TULED_EN
PA3
PA4 DISP_CS
SPI1_SCK DISP_SCK
PA6 DISP_DC
SPI1_MOSI DISP_MOSI
PA8 BTN5
USART1_TX USART1_TX
USART1_RX USART1_RX
USB_DM USB_D-
USB_DP USB_D+
SYS_SWDIO SWDIO
SYS_SWCLK SWCLK
TIM2_CH1 TVLED_EN
C5 0.1uF
C6 1uF
FB2 600R
C2 10uF
C3 0.1uF
C4 0.1uF
Display Interface
J3
Display Connector
C14 1uF
C15 1uF
C16 1uF
C17 1uF
R22 10K
R10 390K
C19 2.2uF
C20 4.7uF
DISP_CS
DISP_RES
DISP_DC
DISP_SCK
DISP_MOSI
Connected display is an ER-OLED013A1-1W using an SSD1306 controller and is configured for SPI mode
Power Regulator
U5
TC1301A-APA
+5V
+3.3V
+1V8
C11 1uF
TP1
TP2
C12 1uF
C25 1uF
C13 10nF
Debug Connector
J2
STDC14
DNI
D8
ESDALC6V1W5
D7
ESD321
RESET
SWCLK
SWDIO
USART1_RX
USART1_TX
Tag-Connect 14-pin footprint is used for the debug connection
Board Mounting
H1 MountingHole
H2 MountingHole
H3 MountingHole
H4 MountingHole
H5 MountingHole
H6 MountingHole
FID1 Fiducial
FID2 Fiducial
FID3 Fiducial
USB Input Port
J1
USB_C_Receptacle_USB2.0
VBUS
F1 500mA
FB1 600R
C22 10nF
C24 4.7uF
R18 5.1k
R19 5.1k
U4
USBLC6-2SC6
USB_CONN_D-
USB_CONN_D+
USB_D-
USB_D+
Derek Konigsberg <dkonigsberg@dektronics.com>
Dektronics, Inc.
Sheet: /
File: main-board.kicad_sch
Title: Printalyzer UV/VIS Densitometer - Main Board
Size: USLetter
Date: 2024-11-22
Rev: D
KiCad E.D.A. 8.0.6
Id: 1/3

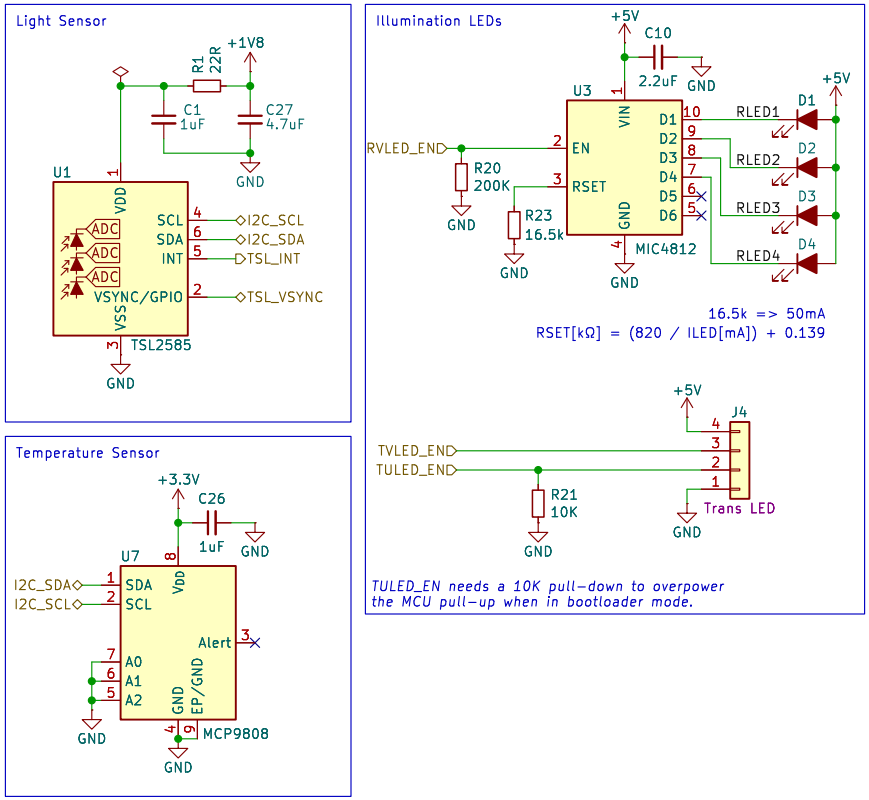

Derek Konigsberg <dkonigsberg@dektronics.com>
Dektronics, Inc.

Sheet: /Sensor Head/
File: main-board-sensor.kicad_sch

Title: Printalyzer UV/VIS Densitometer – Main Board

Size: USLetter	Date: 2024-11-22	**Rev: D**
KiCad E.D.A. 8.0.6		Id: 2/3

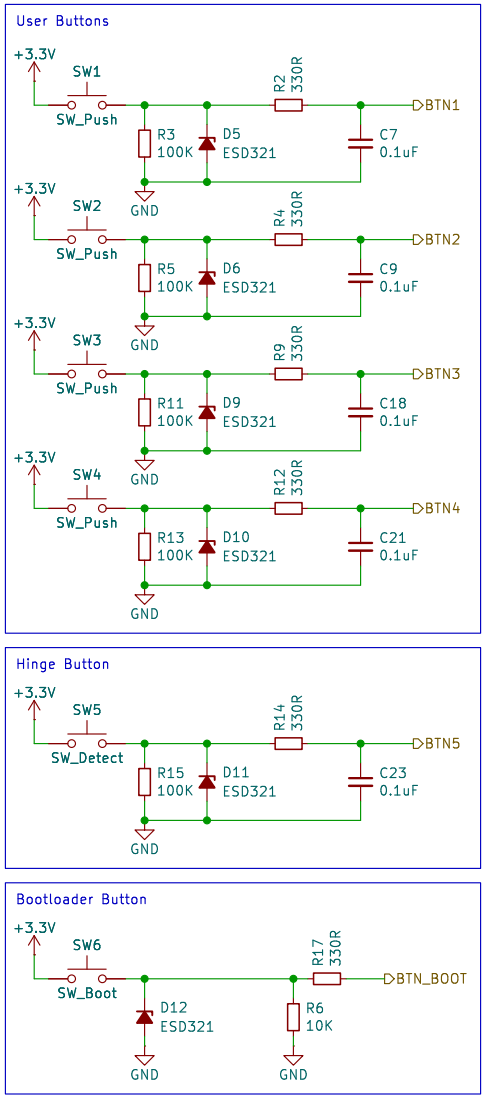

Derek Konigsberg <dkonigsberg@dektronics.com>
Dektronics, Inc.

Sheet: /Input Buttons/
File: main-board-buttons.kicad_sch

Title: Printalyzer UV/VIS Densitometer – Main Board

Size: USLetter	Date: 2024-11-22	**Rev: D**
KiCad E.D.A. 8.0.6		Id: 3/3