TELEVIEW

PTZ-HD30x3G

PTZ Video Camera

Installation Guide - English

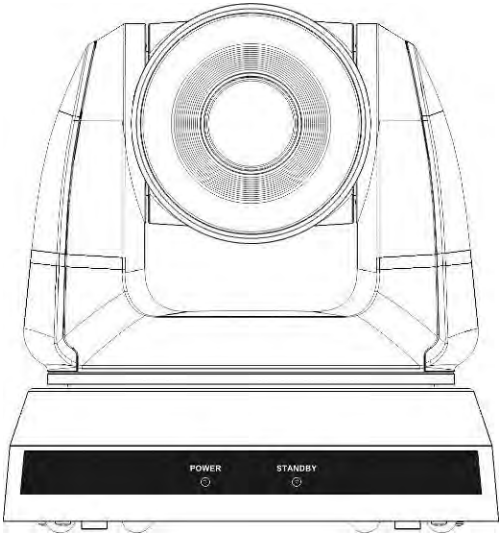

Table of Contents

Chapter 1 Safety Instructions 3

Precautions 4

FCC Warning..... 4

EN55022 (CE Radiation) Warning 4

Chapter 2 Package Contents..... 5

Chapter 3 Product Overview 6

3.1 Overview..... 6

3.2 Description of LED indicator..... 6

Chapter 4 Instruction for installation 7

4.1 Preparation before installation..... 7

4.2 Instruction for installation..... 7

4.3 Connecting the device..... 16

Chapter 5 Remote Control and Setting Menu..... 19

5.1 Functions of remote control..... 19

5.2 Setting Menu 20

Chapter 6 Descriptions of Major Functions..... 28

6.1 I would like to switch to PTZ-HD30X3G 28

6.2 I would like to save the current lens position data..... 28

6.3 I would like to clear the saved position data..... 28

6.4 I would like to turn on the back light compensation function..... 28

6.5 I would like to adjust the shooting angle of the lens..... 28

6.6 I would like to hide the preset image switch (Motionless Preset)..... 28

6.7 I would like to zoom in/out images 29

6.8 I would like to adjust the focal length 29

6.9 I would like to adjust the AF speed 29
6.10 I would like to set the image mode 30
6.11 I would like to freeze images 30
6.12 I would like to rotate the image 30
6.13 I would like to change the camera direction 31
6.14 I would like to display the current status 31
6.15 I would like to reset to the original setting 31

Chapter 7 DIP Switch Setting 32

7.1 DIP SWITCH 32
7.2 RS-422 Connection 34

Chapter 8 Troubleshooting 36

Chapter 1 Safety Instructions

Always follow these safety instructions when setting up and using the PTZ Video Camera:

1 Operation

1.1 Please use the product in the recommended operating environment.
1.2 Do not place the product in tilted position.
1.3 Do not place the product on an unstable trolley, stand or table.
1.4 Do not use this product near water or source of heat.
1.5 Use attachments only as recommended.
1.6 Use the type of power source indicated on the PTZ Video Camera. If you are not sure of the type of power available, consult your distributor or local electricity company for advice.
1.7 Always take the following precautions when handling the plug. Failure to do so may result in sparks or fire:
- Ensure the plug is free of dust before inserting it into a socket.
- Ensure that the plug is inserted into the socket securely.

1.8 Do not overload wall sockets, extension cords or multi-way plug boards as this may cause fire or electric shock.
1.9 Do not block the slots and openings in the case of PTZ Video Camera. They provide ventilation and prevent the PTZ Video Camera from overheating.
1.10 Except as specifically instructed in this User Manual, do not attempt to operate this product by yourself. Opening or removing covers may expose you to dangerous voltages and other hazards. Refer all servicing to licensed service personnel.
1.11 Unplug the PTZ Video Camera from the wall outlet and refer servicing to licensed service personnel when the following situations happen:
- If the power cords are damaged or frayed.
- If liquid is spilled into the Product or the Product has been exposed to rain or water.

2 Installation

2.1 For security considerations, please make sure the standard hanging rack you bought is in line with UL or CE safety approbations and installed by technician personnel approved by agents.

3 Storage

3.1 Do not place the Product where the cord can be stepped on as this may result in fraying or damage to the lead or the plug.
3.2 Never push objects of any kind through cabinet slots. Never allow liquid of any kind to spill into the Product.
3.3 Unplug this product during thunderstorms or if it is not going to be used for an extended period.
3.4 Do not place this product or accessories on top of vibrating equipment or heated objects.

4 Cleaning

4.1 Unplug all the cables before cleaning. Use a damp cloth for cleaning. Do not use liquid or aerosol cleaners.

5 Remote control (if the accessories are equipped with remote control)

5.1 Using an incorrect battery type in the remote control may result in breakdown. Follow local instructions on how to dispose of used batteries.

■ Precautions

Warning: To reduce the risk of fire or electric shock, do not expose this appliance to rain or moisture.

If PTZ Video Camera will not be used for an extended time, unplug it from the power socket.

	Note Risk of Electric ShockPlease do not open it by yourself		
Caution: To reduce the risk of electric shock, do not remove cover (or back). No user-serviceable parts inside. Refer servicing to licensed service personnel.			
	This symbol indicates that this equipment may contain dangerous voltage which could cause electric shock.		This symbol indicates that there are important operating and maintenance instructions in this User Manual with this unit.

■ FCC Warning

This PTZ Video Camera has been tested and found to comply with the limits for a Class A digital device, pursuant to Article 15-J of FCC Rules. These limits are designed to provide reasonable protection against harmful interference in a commercial installation.

This digital apparatus does not exceed the Class A limits for radio noise emissions from digital apparatus as set out in the interference-causing equipment standard entitled "Digital Apparatus," ICES-003 of Industry Canada.

Cet appareil numerique respecte les limites de bruits radioelectriques applicables aux appareils numeriques de Classe A prescrites dans la norme sur le material brouilleur: "Appareils Numeriques," NMB-003 edictee par l'Industrie.

■ EN55022 (CE Radiation) Warning

This product is intended for use in a commercial, industrial, or educational environment. It is not intended for residential use.

This is a Class A product. In a residential environment it may cause radio interference, in which case the user may be required to take adequate measures. The typical use is in a conference room, reception room or hall.

Chapter 2 Package Contents

Camera	Instruction for installation	Remote Control
Power Cord	**Power Adapter**	**RS-422 Connector**
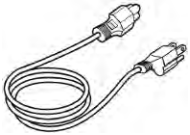 Appearance may vary depending on country/region		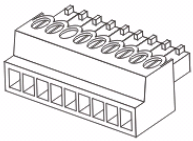
Metal Plate A	**Metal Plate B**	**M3 Screws**
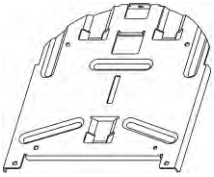	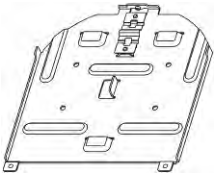	

Chapter 3 Product Overview

3.1 Overview

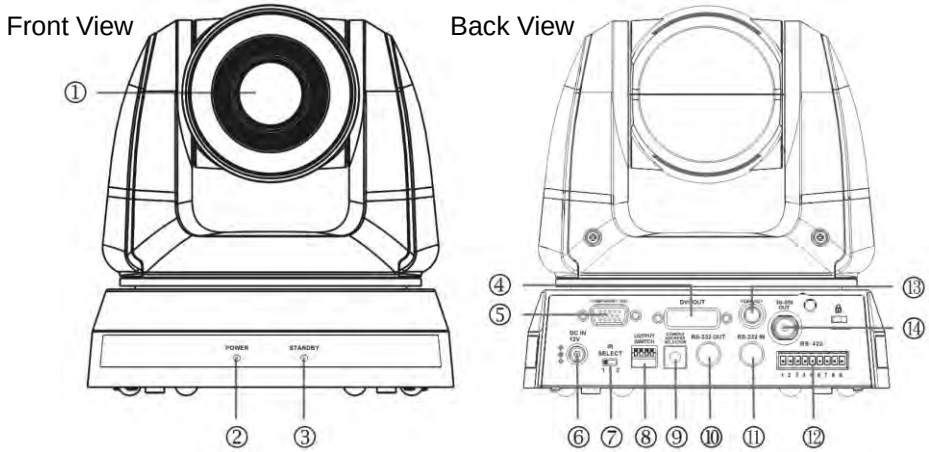

1. Camera lens	2. Power LED indicator
3. Standby LED indicator	4. DVI output
5. Component output	6. Power input
7. IR SELECT	8. OUTPUT Switch
9. Camera Address Selectors	10.RS-232 output
11.RS-232 input	12.RS-422 Connection
13.VIDEO output	14.3G-SDI output

3.2 Description of LED indicator

3.2.1 Power:

3.2.1.1 No Light: Power off

3.2.1.2 Green light: In use

3.2.1.3 Flickering green: Signal from the remote control is received; the indicator flickers every 0.5 second

3.2.2 Standby:

3.2.2.1 Orange: In standby mode

3.2.2.2 No Light: Power on

Chapter 4 Instruction for installation

4.1 Preparation before installation

Installation and connection of PTZ Video Camera requires special skills. To install by yourself, please follow necessary steps, ensure steady and tight installation of the device, and pay attention to your safety to avoid any accident.

4.1.1 Ensure the safety of the installation environment. Please do not install the device on unstable ceiling or in a place where the device is in danger of falling to avoid any accident.

4.1.2 Please check whether accessories in the box are complete or not. Please contact the supplier for any shortage, and make sure to keep the accessories in the box intact.

4.1.3 Please choose a proper place for installation of PTZ-HD30X3G in advance. Please determine an installation place according to the following requirements.

4.1.1.1 Confirm the position for the object to be captured.

4.1.1.2 Confirm whether the PTZ-HD30X3G is set at a proper distance from other light sources.

4.2 Instruction for installation

4.2.1 I would like to install PTZ-HD30X3G on the desk

4.2.1.1 Precautions for installation

- ◆ Please install the machine on a flat desk
- ◆ Do not grab the camera head by hand when handling the device
- ◆ Do not rotate the camera head by hand. Improper rotation may result in breakdown of the camera

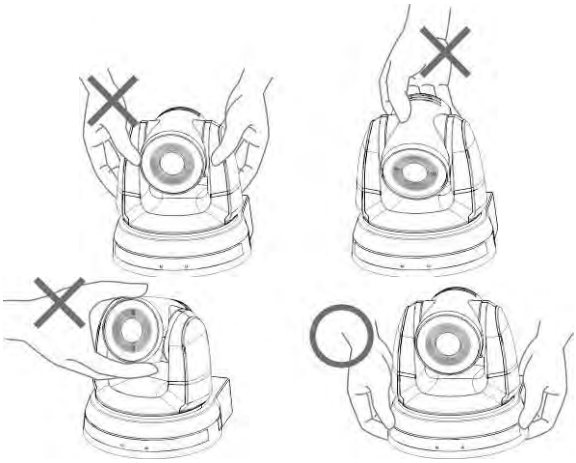

4.2.1.2 Installation steps

1. Please adjust DIP switch at first prior to installation

<Remark> Please refer to Chapter 7 DIP Switch Setting for the relevant descriptions on DIP switch.

2. Place the camera on a flat desk directly to ensure the normal vertical and horizontal operation of the machine

4.2.2 I would like to install PTZ-HD30X3G on the ceiling

4.2.2.1 Prepare for the parts and equipment required during the installation

1. Accessories of PTZ-HD30X3G in the box (metal plates A, B and M3 screw x 7)
2. Screw for locking on ceiling mounted hanger x 4
3. Drilling machine, screw driver, ladder

4.2.2.2 Camera Size

Length x Width x Height : 174x186.13x185.88mm

Weight : 2.0Kg

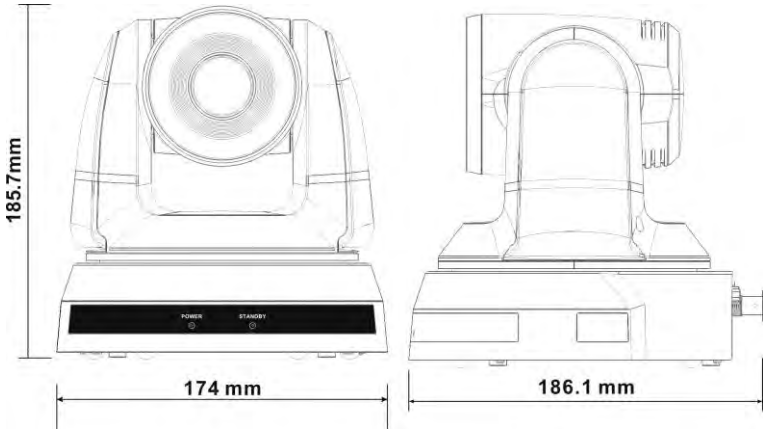

4.2.2.3 Max. rotation dimension of camera

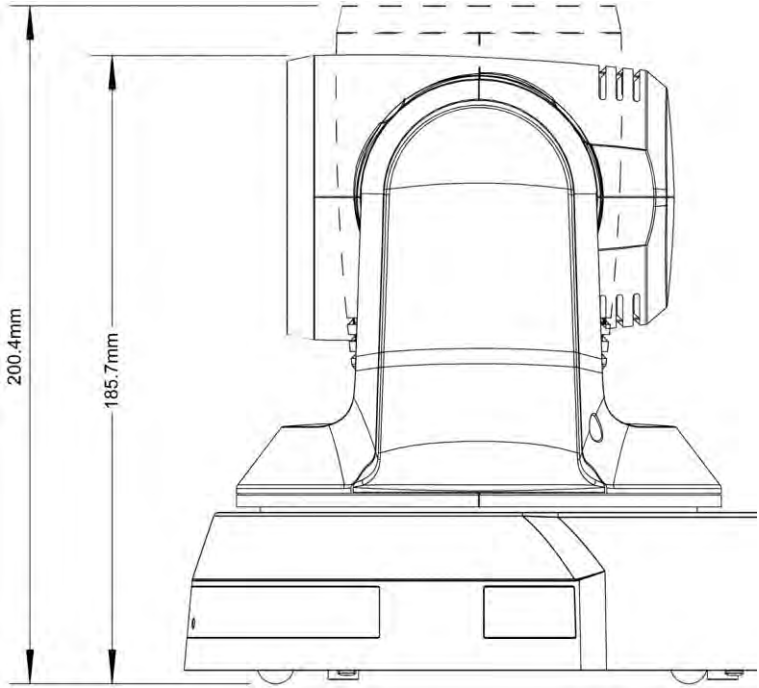

4.2.2.4 Size Diagram

1. Metal plate B - ceiling side

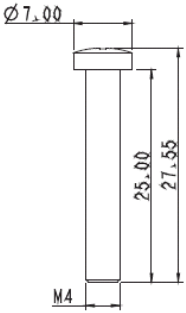

Metal plate B locking screw

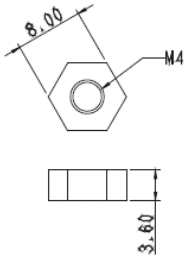

Metal plate B locking bolt

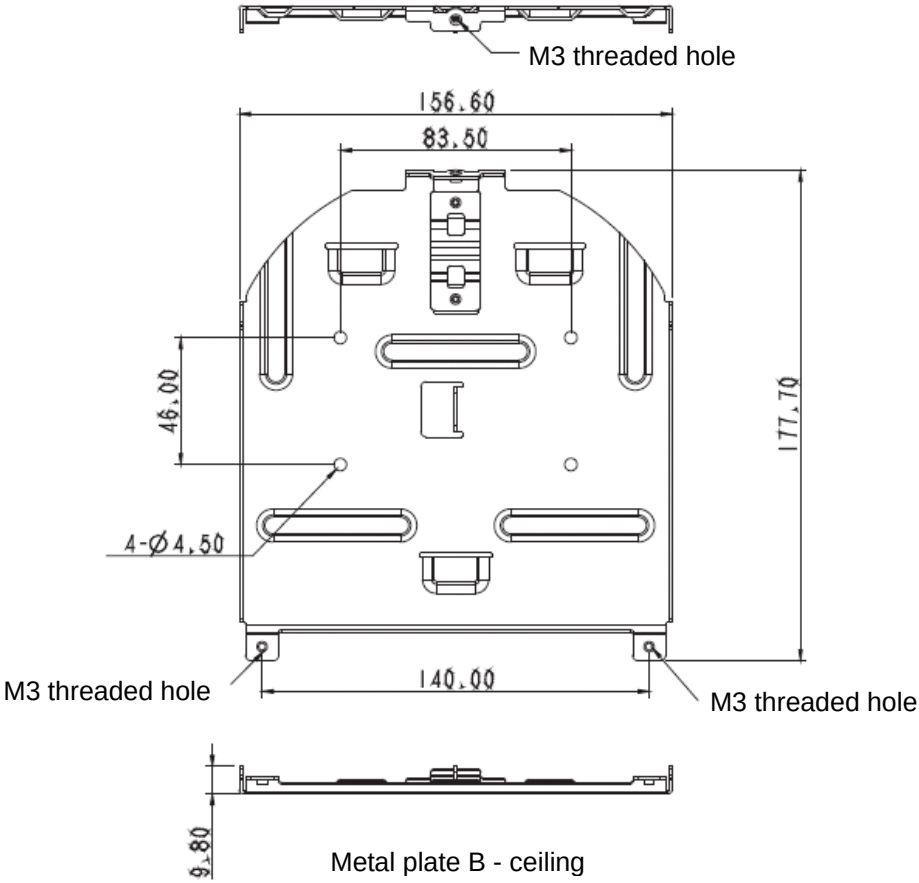

Metal plate B - ceiling

2. Metal plate A - machine side

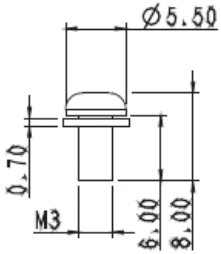

Metal plate A locking screw

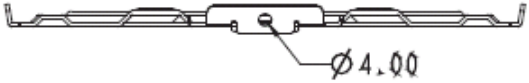

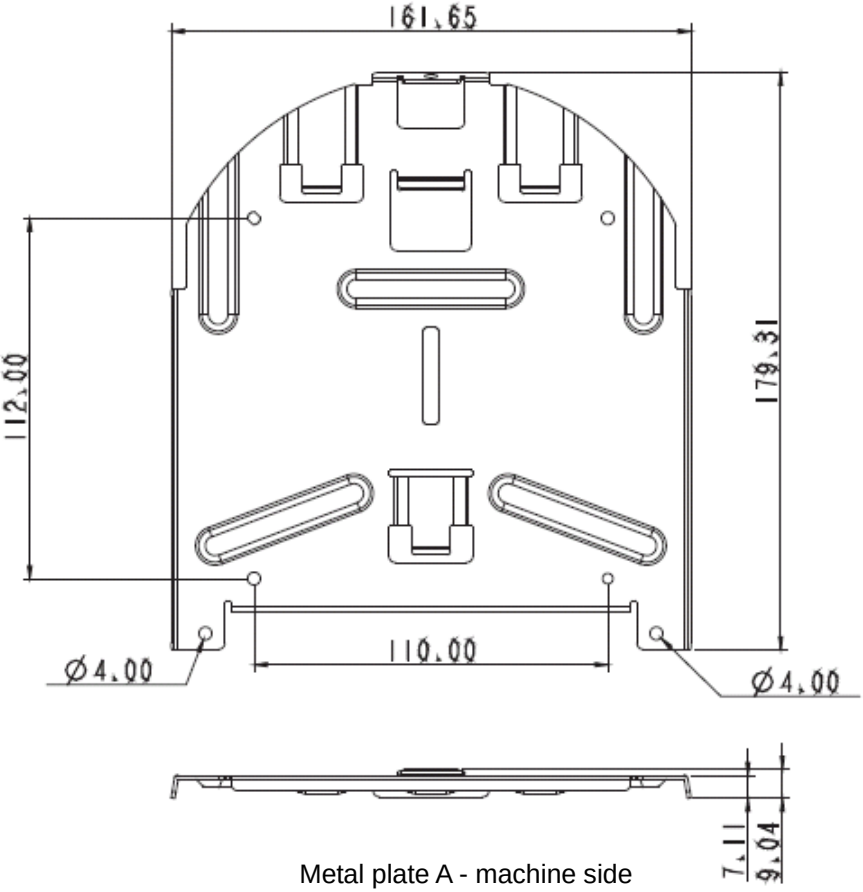

Metal plate A - machine side

3. Bottom of machine

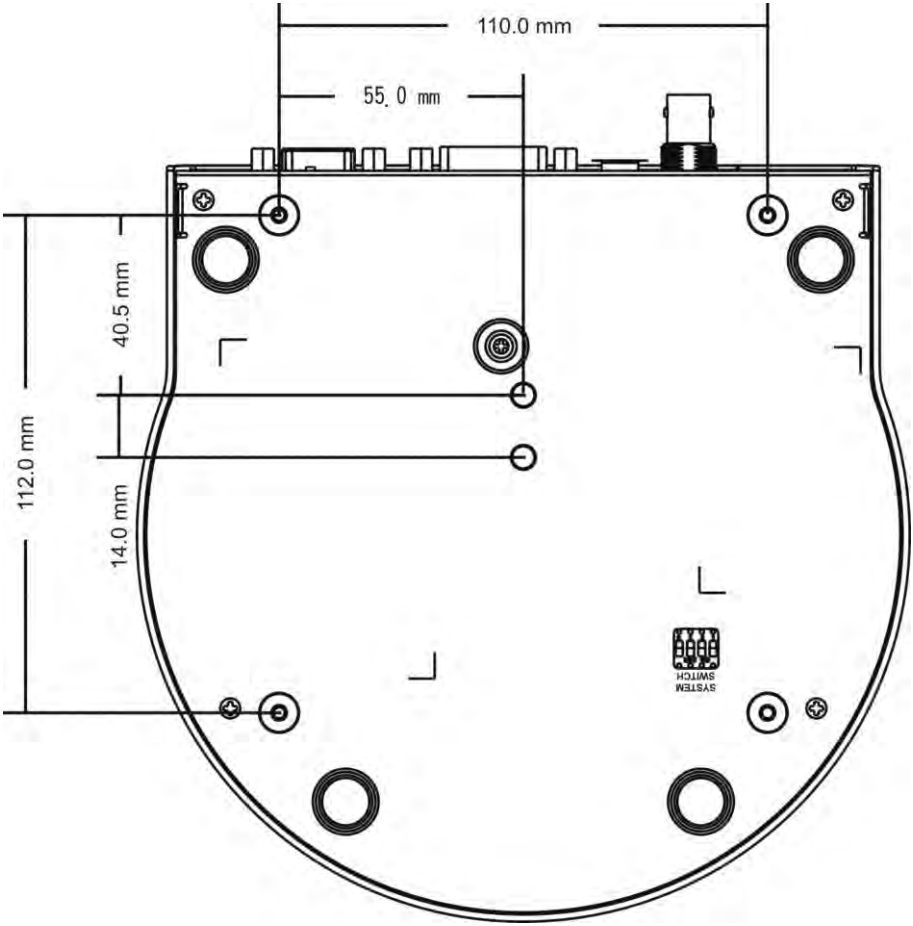

4.2.2.5 Precautions for installation

1. Before installation, please confirm the orientation of the machine relative to the object to be captured
2. It is recommended that the machine should be set at a distance of more than 1 meter away from the object to be captured. Please adjust for a best distance according to the magnification of the lens

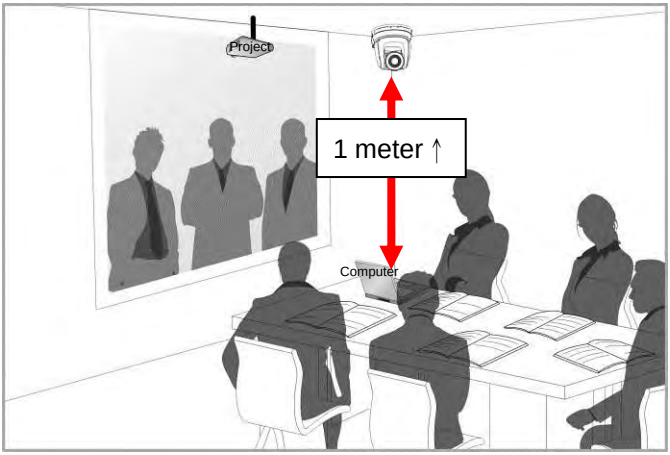

3. The machine (including metal plates) is weighed at about 2.5 kg. If it is to be installed on the ceiling, please use the hanger that has obtained UL security approval to prevent the machine from falling down.
4. Please check whether the camera is installed securely on a regular basis

4.2.2.6 Installation steps

1. Please adjust resolution on DIP switch at first

<Remark> Please refer to Chapter 7 DIP Switch Setting for the relevant descriptions on DIP switch.

2. Fix the metal plate A on the machine base with 4 M3 screws

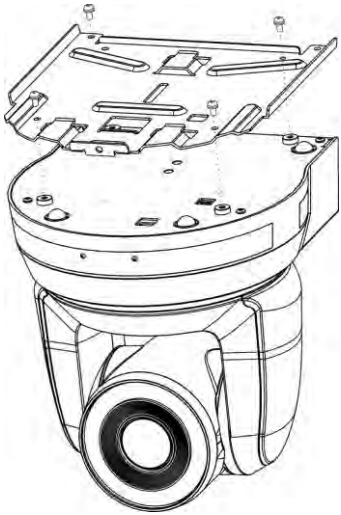

3. Lock the metal plate B on ceiling mounted hanger

※Caution:

(1) Please use the hanger that has obtained UL security approval

(2) Please reserve the hole for the connecting wires of the camera

4. Combine the metal plate A and the metal plate B

   (1) Push the metal plate A up to the ceiling and then to the right to latch the metal plate B

   (2) Fix with 3 M3 screws

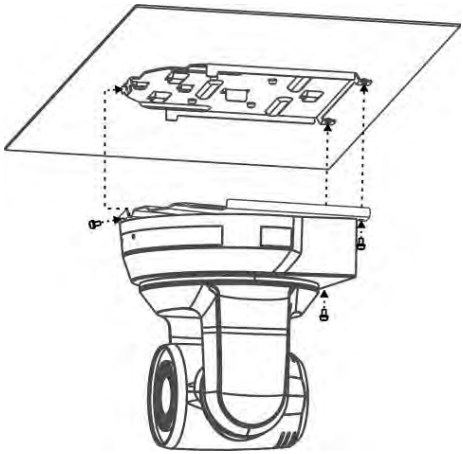

4.2.2.7 How to remove

1. Remove the connecting wires from the camera
2. Uninstall the camera together with the ceiling, loosen the three screws that fix the metal plates A and B and push to the left to remove the machine

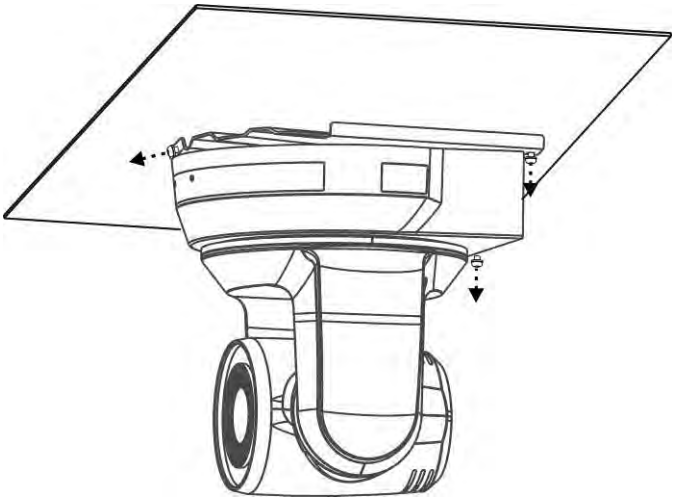

3. Then remove the screws on the hanger and the machine

4.3 Connecting the device

4.3.1 Image Output

4.3.1.1 Connecting to an HDTV/computer monitor (DVI)

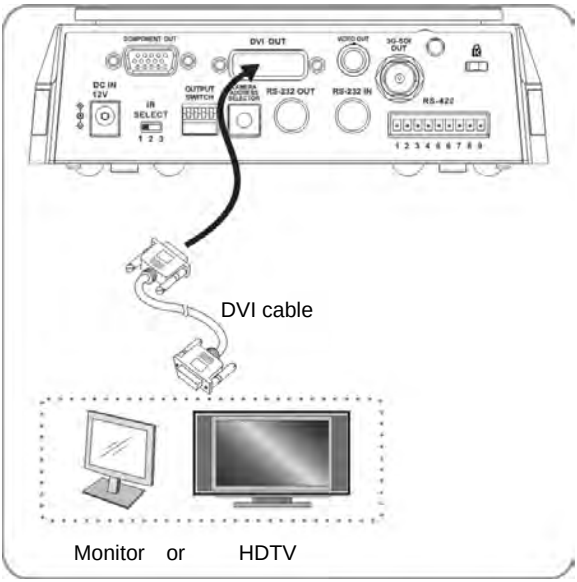

4.3.1.2 Connecting to a TV (C-Video)

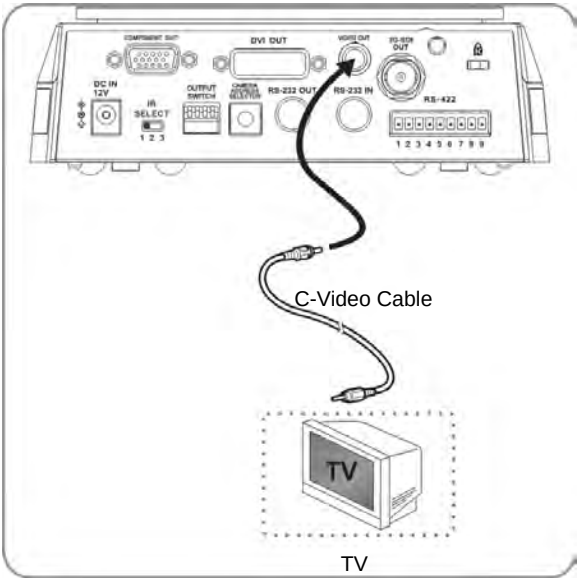

4.3.1.3 Connecting to an HDTV (3G-SDI)

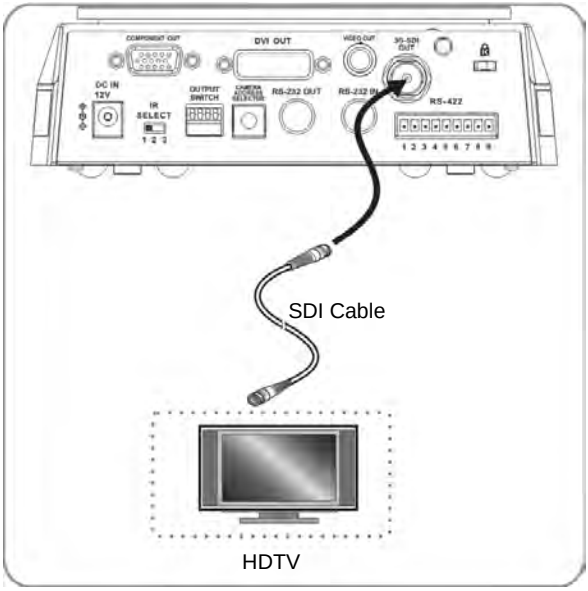

4.3.1.4 Connection to the device for image output

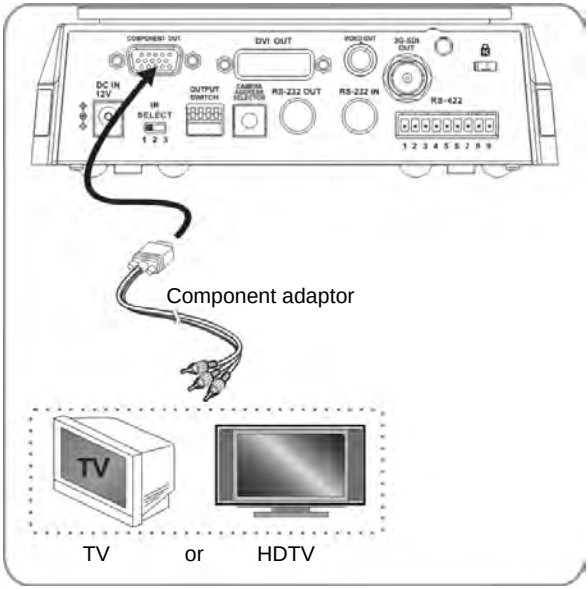

4.3.2 Controlling VCs with the computer

4.3.2.1 Connecting to one computer for connection between VCs (RS-232 in/out)

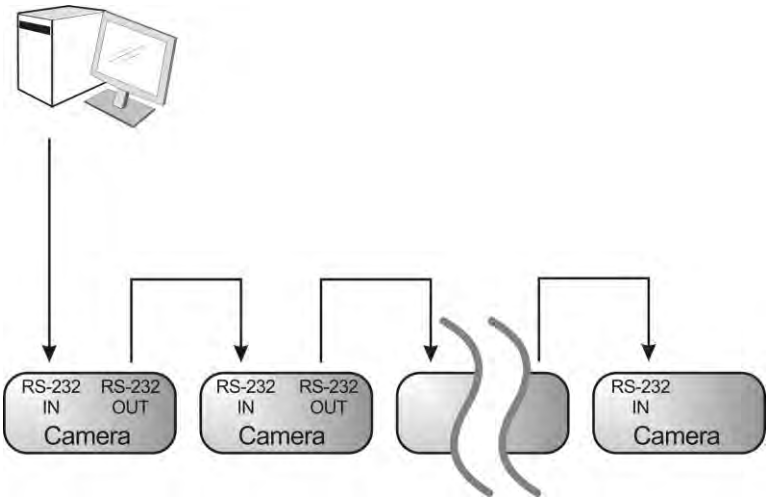

<Remark> With RS-232 in/out, at most 7 VCs can be connected.

4.3.2.2 Connecting to one computer for connection between VCs (RS-422)

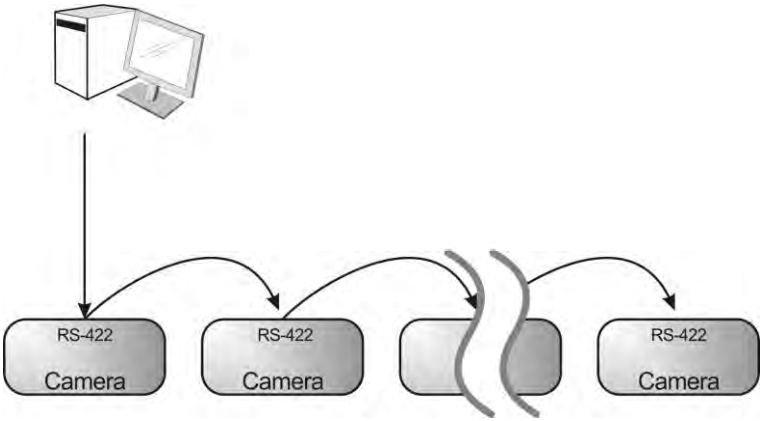

<Remark> Please refer to 7.2 RS-422 connection for the RS-422 connection instructions.
<Remark> With RS-422, at most 7 VCs can be connected.

Chapter 5 Remote Control and Setting Menu

5.1 Functions of remote control

<Remark> The below functions are listed alphabetically.

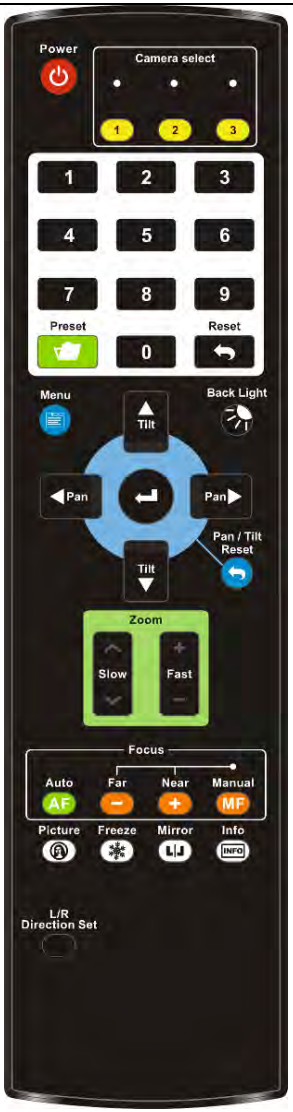

Item	Description
⮜,⮞,⮝,⮟	Move the lens
Back Light	Turn on/off back light compensation
Camera select	Select 1 ~ 3 Camera
Focus-Manual / Far/Near	Turn on manual focus to adjust the focal length
Focus-Auto	Auto focus
Freeze	Freeze the screen
Home-Enter	Go back to the main page / Execute
Info	Status information
L/R Direction Set	L/R Direction / OFF / Normal
Menu	Display OSD menu
Mirror	Rotate the image (OFF / Mirror / Flip / Mirror + Flip)
Pan/Tilt Reset	Clear the Pan / Tilt setting
Picture	Switch image effect (OFF / Neg / B&W)
Power	Power Switch
Preset	Appoint an ID (0 ~ 9) to save the current position data
Reset	Appoint an ID (0 ~ 9) to delete the current position data
Zoom-Fast	Adjust image size
Zoom-Slow	Fine-tune image size

5.2 Setting Menu

<Remark> Press **[Menu]** on the **remote control** to enter the setting menu; the **bold underlined** values in the following table are defaults.

1st Level Major Items	2nd Level Minor Items	3rd Level Adjustment Values		Function Descriptions
Exposure	**Mode**	1. **<u>Auto</u>** 2. Brightness 3. Shutter Pri 4. Iris Pri 5. Manual		Exposure mode setting
	Exposure_Comp.	**<u>On</u>** / Off		AE Level
	Exposure_Comp. Level	-7~**<u>C</u>**~7		The value can be adjusted only after **Exposure_ Comp.** is activated
	Spot Light	On / **<u>Off</u>**		The value can be adjusted when the mode is set to **Full Auto** or **Shutter Pri**
	Spot Light Position	X(0~15)Y(0~15)		The value can be adjusted only after **Spot Light** is activated
	Shutter Pri	60/59.94/ 30/29.97 mode	50/25 mode	Shutter priority setting
		1/10000	1/10000	
		1/6000	1/6000	
		1/4000	1/3500	
		1/3000	1/2500	
		1/2000	1/1750	
		1/1500	1/1250	
		1/1000	1/1000	
		1/725	1/600	
		1/500	1/425	

		1/350	1/300	
		1/250	1/215	
		1/180	1/150	
		1/125	1/120	
		1/100	1/100	
		1/90	1/75	
		1/60	**1/50**	
		1/30	1/25	
		1/15	1/12	
		1/8	1/6	
		1/4	1/3	
		1/2	1/2	
		1/1	1/1	
	Iris Pri	1. **F1.6** 2. F2 3. F2.4 4. F2.8 5. F3.4 6. F4 7. F4.8 8. F5.6 9. F6.8 10. F8 11. F9.6 12. F11 13. F14 14. Close		Iris setting

<table>
<tr><td rowspan="2"></td><td>**Manual Gain**</td><td colspan="2">1. **<u>0dB</u>**
2. 3.6 dB
3. 7.1 dB
4. 10.7 dB
5. 14.3 dB
6. 17.8 dB
7. 21.4 dB
8. 25 dB
9. 28.6 dB
10. 32.1 dB
11. 35.7 dB
12. 39.3 dB
13. 42.8 dB
14. 46.4 dB
15. 50 dB</td><td>Manually set the gain</td></tr>
<tr><td>**Manual Speed**</td><td>60/59.94/ 30/29.97 mode</td><td>50/25 mode</td><td rowspan="15">Manually set the shutter</td></tr>
<tr><td></td><td>1/10000</td><td>1/10000</td></tr>
<tr><td></td><td>1/6000</td><td>1/6000</td></tr>
<tr><td></td><td>1/4000</td><td>1/3500</td></tr>
<tr><td></td><td>1/3000</td><td>1/2500</td></tr>
<tr><td></td><td>1/2000</td><td>1/1750</td></tr>
<tr><td></td><td>1/1500</td><td>1/1250</td></tr>
<tr><td></td><td>1/1000</td><td>1/1000</td></tr>
<tr><td></td><td>1/725</td><td>1/600</td></tr>
<tr><td></td><td>1/500</td><td>1/425</td></tr>
<tr><td></td><td>1/350</td><td>1/300</td></tr>
<tr><td></td><td>1/250</td><td>1/215</td></tr>
<tr><td></td><td>1/180</td><td>1/150</td></tr>
<tr><td></td><td>1/125</td><td>1/120</td></tr>
<tr><td></td><td>1/100</td><td>1/100</td></tr>
<tr><td></td><td>1/90</td><td>1/75</td></tr>
</table>

		1/60	**1/50**	
		1/30	1/25	
		1/15	1/12	
		1/8	1/6	
		1/4	1/3	
		1/2	1/2	
		1/1	1/1	
	Manual Iris	1. **F1.6** 2. F2 3. F2.4 4. F2.8 5. F3.4 6. F4 7. F4.8 8. F5.6 9. F6.8 10. F8 11. F9.6 12. F11 13. F14 14. Close		Manually set the aperture
	Bright	1~ **C**~28		
	Gain Limit	1. 10.7 dB 2. 14.3 dB 3. 17.8 dB 4. 21.4 dB 5. 25 dB 6. 28.6 dB 7. 32.1 dB 8. 35.7 dB 9. 39.3 dB 10. 42.8 dB 11. 46.4 dB 12. **50 dB**		Max. limit value of electron gain
	WDR	1. **Off** 2. 1 3. 2 4. 3		WDR settings

White Balance	**Mode**	1. **Auto** 2. Indoor 3. Outdoor 4. Trigger White Balance 5. Auto White Balance 6. Manual 7. Outdoor Auto 8. Sodium Lamp Auto 9. Sodium Lamp 10. Sodium Lamp Outdoor Auto	Select the color temperature mode
	One Push Trigger	**ENTER**	One push trigger
	R-Gain	0~ **C**~255	Adjustable when the white balance mode is set to **Manual**
	B-Gain	0~ **C**~255	Adjustable when the white balance mode is set to **Manual**
Picture	**Picture effect**	1. **Off** 2. Neg 3. B&W	Set the picture effect
	Sharpness	1~**A**~16	Adjust the **sharpness** of the image
	NR	1. Off 2. 1 3. 2 4. **3** 5. 4 6. 5	Noise reduction setting
	3D NR	1. Off 2. **Low** 3. Typ 4. Max	3D dynamic noise reduction settings
	Saturation	0~ **A** ~14	Adjustable when the ***image mode*** is set to ***Custom*** **mode**
	Hue	0~ **A** ~14	Adjustable when the ***image mode*** is set to ***Custom*** **mode**

	Gamma	1. **0** 2. 1	Adjustable when the ***image mode*** is set to ***Custom*** **mode**
	Brightness	0~ **A** ~31	Adjustable when the ***image mode*** is set to ***Custom***
	Contrast	0~ **A** ~31	Contrast adjustment; Adjustable when the ***image mode*** is set to ***Custom***
	Black Level	1. **Off** 2. Type 1 3. Type 2 4. Type 3	Shadow details and transparency adjustment, adjustable when the ***image mode*** is set to ***Custom***
Pan Tilt Zoom	**Pan / Tilt Limit**	On / **Off**	Turn on/off the angle limit setting
	Pan Right Limit	0~**170**	Limit the right angle
	Pan Left Limit	**-170**~0	Limit the left angle
	Tilt UP Limit	0~**90**	Limit the upward angle
	Tilt Down Limit	**-30**~0	Limit the downward angle
	Pan/Tilt Speed	**Normal**/ Smooth	Adjustable the **Pan/Tilt Speed**
	D-Zoom Limit	**x1**~x12	Limit the D-zoom multiple
	Preset Speed	1. 5 per second 2. 25 per second 3. 50 per second 4. **150 per second** 5. 250 per second 6. 300 per second	Set the rotation speed of the cradle head when Preset is executed
Dig. -Effect	**Mirror**	1. **Off** 2. Mirror 3. Flip 4. Mirror + Flip	Set the mode at which the image is turned

Auto Focus	**AF Sensitivity**	1. Low 2. **Normal**	Select the AF triggering speed. The higher the speed is, the faster AF is triggered
	AF speed	1. **Normal** 2. 1 3. 2 4. 3 5. 4 6. 5	Focus speed after AF triggering
System	**C-Video**	NTSC LB	Image mode
		NTSC CP	
		NTSC SQ	
		PAL LB	
		PAL CP	
		PAL SQ	
	Video Type	**DVI/SDI**	Select video output type
		YPbPr	
	Prompt	On / **Off**	Turn on/off the prompt information on the display
	Motionless Preset	On / **Off**	When the function is enabled, the screen will Freeze when Preset is executed. Freeze will be released after Preset is completed
	Low Latency	On / **Off**	Turn on to reduce image delay
	IR Receive	**On** / Off	Turn on/off the infrared reception
	Language	**English** / Chinese	Language
	Control Device	**Encoder** / Controller	Control Device setting
	Protocol	**Protocol V** / Protocol PD	Protocol V: VISCA Protocol PD: PELCO D
	PD Address	1~ **C**~255	The Protocol set to PD allows the camera ID address to be assigned

	Output Mode	1. **<u>1920x1080/60p</u>** 2. 1920x1080/50p 3. 1920x1080/30p 4. 1920x1080/25p 5. 1920x1080/60i 6. 1920x1080/50i 7. 1280x720/60p 8. 1280x720/50p 9. 1280x720/30p 10. 1280x720/25p 11. 1080/59.94p 12. 1080/59.94i 13. 1080/29.97p 14. 720/59.94p 15. 720/29.97p	
	Factory Reset	On / **<u>Off</u>**	Resume the factory default setting
Status			Display the current setting status

Chapter 6 Descriptions of Major Functions

6.1 I would like to switch to PTZ-HD30X3G

1. Press **[Camera 1 ~ 3]** on the **remote control** to select PTZ-HD30X3G.

- **Camera 1 ~ 3 is selected with IR SELECT.**

6.2 I would like to save the current lens position data

1. Press **[Preset + ID]** on the **remote control** to save the current position data.

- **ID shall be a digit [0 ~ 9].**
- **Use VISCA command to store position data to [0 ~ 127]**

6.3 I would like to clear the saved position data

1. Press **[Reset + ID]** on the **remote control** to clear the given position data.

- **ID shall be a digit [0 ~ 9].**
- **Use VISCA command to clear position data stored in [0 ~ 127]**

6.4 I would like to turn on the back light compensation function

1. Press **[Back Light]** on the **remote control** to turn on or turn off the back light compensation

6.5 I would like to adjust the shooting angle of the lens

1. Press **[Tilt ▲]** or **[Tilt ▼]** on the **remote control** to adjust the angle upward or downward.
2. Press **[Pan ▶]** or **[Pan ◀]** on the **remote control** to adjust the angle to right or left.
3. Press **[Pan - Tilt Reset]** on the **remote control** to reset the angle to the center point.

6.6 I would like to hide the preset image switch

(Motionless Preset)

1. Press **[MENU]** to activate the setting menu.
2. Press [▶] or [◀] to select **[System]**.
3. Press **[ENTER]** to activate.
4. Press [▲] or [▼] to select **[Motionless Preset]**.
5. Press **[ENTER]** to activate.
6. Press [▶] or [◀] to select **[Off / On]**.
7. Press **[MENU]** to exit.

6.7 I would like to zoom in/out images

6.7.1 Adjust image size

1. Press **[Fast +]** on the **remote control** to zoom in images.
2. Press **[Fast -]** on the **remote control** to zoom out images.

6.7.2 Fine-tune image size

1. Press **[Slow +]** on the **remote control** to zoom in images.
2. Press **[Slow -]** on the **remote control** to zoom out images.

6.8 I would like to adjust the focal length

6.8.1 Auto tune

1. Press **[AF]** on the **remote control** to adjust automatically.

6.8.2 Manual focus

1. Press **[MF]** on the **remote control** to turn on the manual focus function.
2. Press **Focus - [+]** or **Focus - [-]** to adjust.

6.9 I would like to adjust the AF speed

6.9.1 Adjust the AF Sensitivity

Triggering speed of focus. The higher the speed is, the faster focus is triggered

To shoot fast-moving objects, ***AF Sensitivity*** can be set to **[High]** or **[Medium]**, which is applicable to quick focus.

When the environment is too dark to enable auto focus or fixed objects have to be shot in different brightness, ***AF Sensitivity*** can be set to **[Low]**.

1. Press [MENU] to activate the setting menu.
2. Press [▶] or [◀] to select [Auto Focus].
3. Press [ENTER] to activate.
4. Press [▲] or [▼] to select [AF Sensitivity].
5. Press [ENTER] to activate.
6. Press [▶] or [◀] to select [High / Medium / Low].
7. Press [MENU] to exit.

6.9.2 Adjust the AF speed

The focus speed upon triggering ***AF Sensitivity***

- **[Normal] (**default)**:** Image flickering may not occur
- **[Fast]:** Fast focus speed

1. Press [MENU] to activate the setting menu.
2. Press [▶] or [◀] to select [Auto Focus].
3. Press [ENTER] to activate.
4. Press [▲] or [▼] to select [AF speed].
5. Press [ENTER] to activate.
6. Press [▶] or [◀] to select [Fast / Normal].
7. Press [MENU] to exit.

6.10 I would like to set the image mode

1. Press **[Picture]** on the **remote control** to switch [Off / Neg / B&W].

6.11 I would like to freeze images

1. Press **[Freeze]** on the **remote control** to freeze the current image on the display.

6.12 I would like to rotate the image

1. Press **[Mirror]** on the **remote control** to switch [Off / Mirror / Flip / Mirror

+ Flip].

6.13 I would like to change the camera direction

1. Press **[L/R Direction Set]** on the **remote control** to switch [L/R Direction / Off / Normal].

6.14 I would like to display the current status

1. Press **[Info]** on the **remote control** to display the current status information.

6.15 I would like to reset to the original setting

1. Press **[MENU]** to activate the setting menu.
2. Press [►] or [◄] to select **[System]**.
3. Press **[ENTER]** to activate.
4. Press [▲] or [▼] to select **[Factory Reset]**.
5. Press **[ENTER]** to activate.
6. Press [►] or [◄] to select **[On]**.
7. Press **[ENTER]** to execute.

Chapter 7 DIP Switch Setting

<Note> Please turn off the machine before changing DIP switch setting.

7.1 DIP SWITCH

7.1.1 OUTPUT Switch

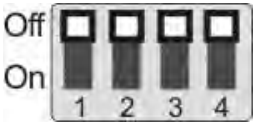

Output Mode	Setting	Output Mode	Setting
1920x1080/60p		1920x1080/50p	
1920x1080/30p		1920x1080/25p	
1920x1080/60i		1920x1080/50i	
1280x720/60p		1280x720/50p	
1280x720/30p		1280x720/25p	
1920x1080/59.94p		1920x1080/59.94i	
1920x1080/29.97p		1280x720/59.94p	
1280x720/29.97p			

7.1.2 IR SELECT

ID	Setting
1	
2	
3	

7.1.3 Camera Address Selector

Setting	Function Descriptions
0~7	ID 0~7
8~9	Reserved

7.1.4 System Switch

Setting	Function Descriptions
DIP 1	RS-232C/RS-422 selector OFF : RS-232C / ON : RS-422
DIP 2	Infrared signal output switch OFF : Off / ON : On
DIP 3	Communication baud rate selector OFF : 9600 / ON : 38400
DIP 4	Reserved

7.2 RS-422 Connection

7.2.1 RS-422 Pin Description

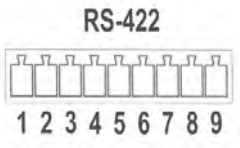

Pin NO.	Function
1	RXD OUT -
2	RXD OUT +
3	TXD OUT -
4	TXD OUT +
5	GND
6	RXD IN -
7	RXD IN +
8	TXD IN -
9	TXD IN +

<Note>

Please connect IN+ to OUT+ when connecting to SONY productsFor non-SONY products, it may be necessary to connect IN+ to OUT-

7.2.2 Use RS-422 Connection

1. Hold the two sides of RS-422 connector and pull out in the direction shown by the arrow in the figure below

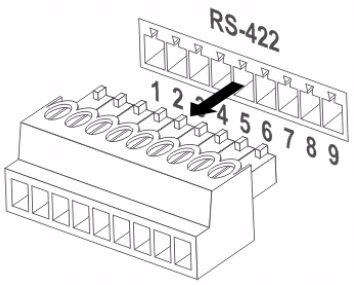

2. Peel off a section of copper wire (AWG Nos. 28 to 18) and insert it into the connector hole; then use flat screw driver to fix it

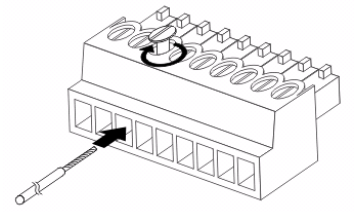

3. Insert the wired RS-422 connector back to the camera. Now the connection is completed

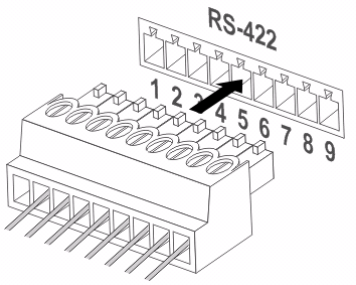

<Note> When RS-422 connection is being used, do not use RS-232C connection.

Chapter 8 Troubleshooting

This chapter describes problems you may encounter while using PTZ-HD30X3G. If you have questions, please refer to related chapters and follow all the suggested solutions. If the problem still occurred, please contact our distributors or service center.

No.	Problems	Solutions
1.	**Boot without power signal**	1. Make sure you have plugged in the power cord. 2. Make sure the Service DIP switch is Off.
2.	**There is no image output from PTZ-HD30X3G**	1. Check the power. 2. Check if DIP switch is properly set. Please refer to **Chapter 7 DIP Switch Setting** for related settings. 3. Make sure the display supports the output resolution; in general, the resolution is 1080p60/1080i60/720p60. 4. Replace the cables and make sure they are not faulty.
3.	**PTZ-HD30X3G image is severely delayed**	Please use 1080p or 720p 60/50 Hz signals rather than 25/30 Hz signals.
4.	**Not working after changes to DIP Switch setting**	After completing DIP Switch setting, unplug and reconnect the power cord and turn on the machine to change the setting.
5.	**PTZ-HD30X3G cannot be operated by remote control**	1. Please confirm if the Camera Select on the remote control can be used together with the IR Select on PTZ-HD30X3G. 2. Please prevent PTZ-HD30X3G from direct sunshine. 3. Make sure the energy-saving bulb and the IR touch screen are as far as possible in order to avoid interference. 4. When several PTZ-HD30X3G are connected in the same area, the operation of two remote controls at the same time may result in signal interference. It is recommended to use one remote control.
6.	**The device cannot**	1. Please consult the distributor to make sure the

	be controlled with Codec	firmware version is the latest one. The steps to check version is as follows: 1.1 Press [MENU] on the remote control 1.2 Choose [Status] 1.3 Go to Page 5 of [System] 1.4 Make sure the firmware version is correct 2. Make sure the connection is correct (RS-232/422 Input). 3. Make sure System Switch DIP 1 and DIP 3 are correct.
7.	**The device cannot be controlled with RS-232/RS422**	1. Make sure the connection is correct (RS-232/422 Input). 2. Make sure System Switch DIP 1 and DIP 3 are correct.