P2_0	MODE
Low	Test Mode
High	APP Mode

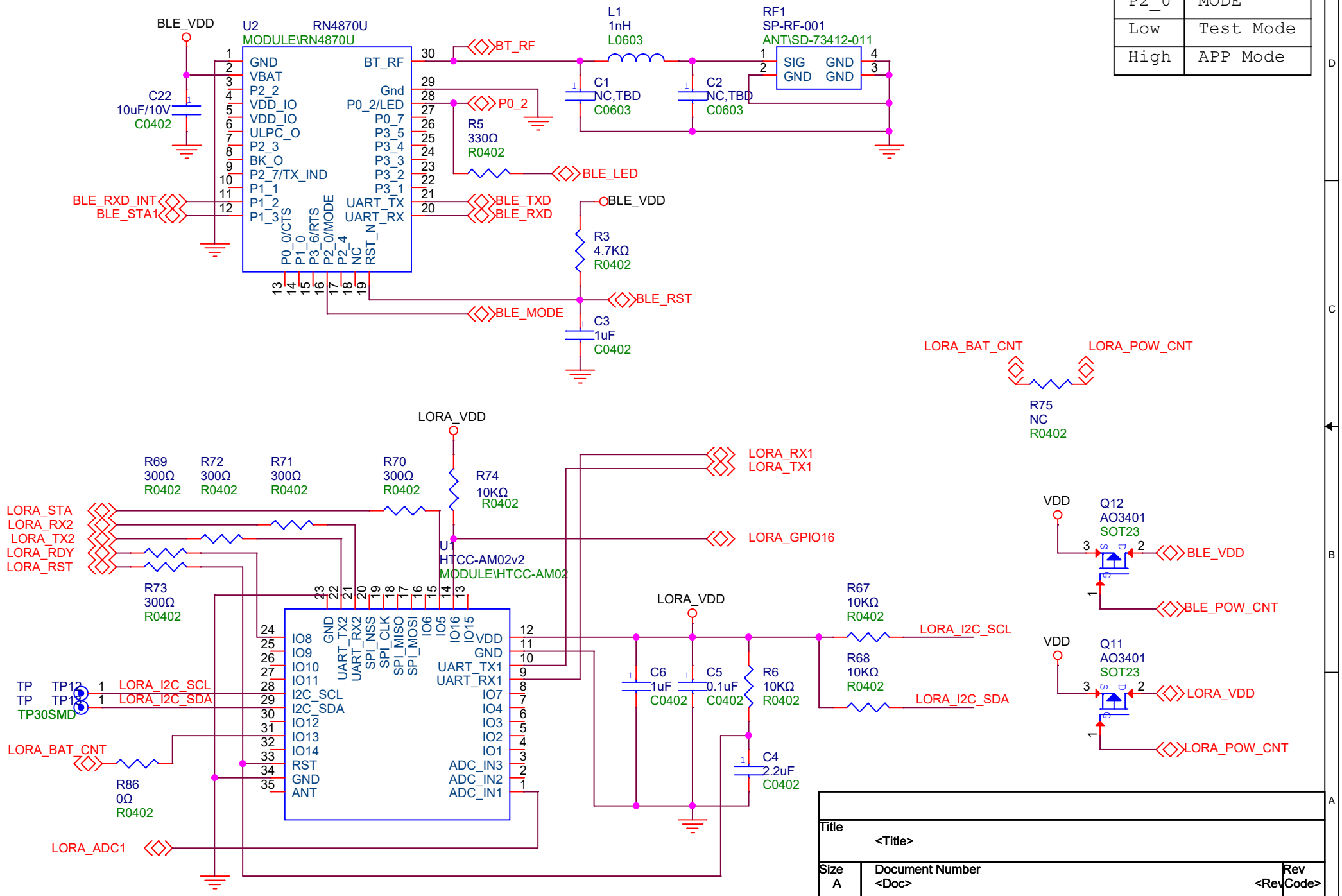

Title	<Title>	
Size A	Document Number <Doc>	Rev <RevCode>
Date: Monday, January 03, 2022	Sheet 3 of 3	