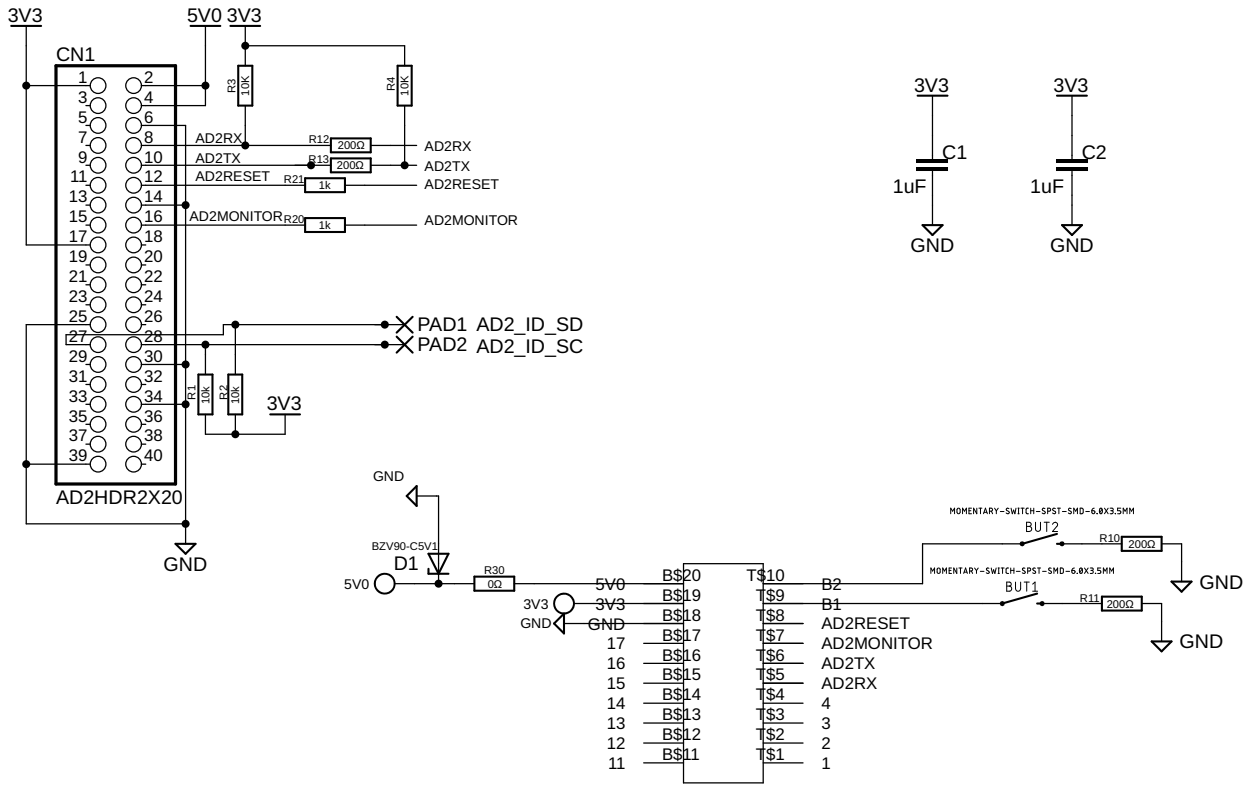

PCB carrier for AD2pHAT and ESP32-PoE-ISO that sits on the bottom of a ML-24F*1508 case. Provides line conditioning and ESD protection.

Nu Tech Software Solutions, Inc.
By Sean Mathews 11/2020

AD2Iot_carrier_v1.1

7/19/2022 10:46 AM

Sheet: 1/1