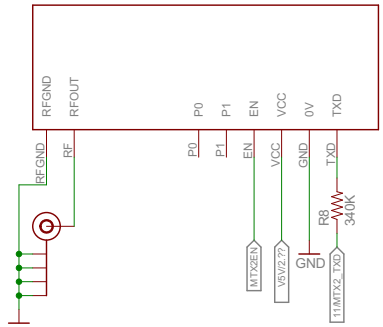

390K = 425Hz Shift

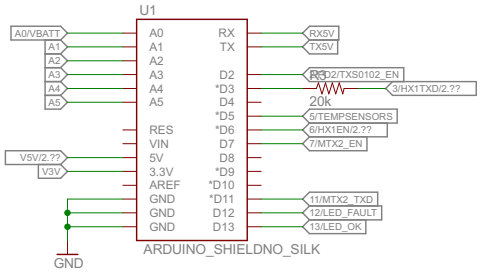

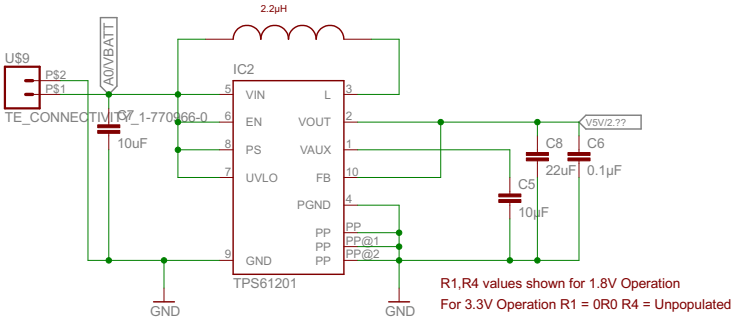

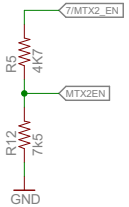

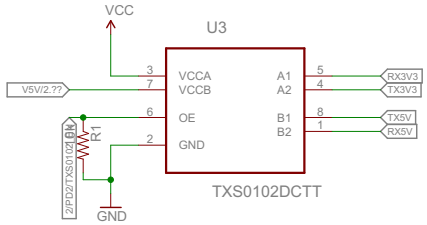

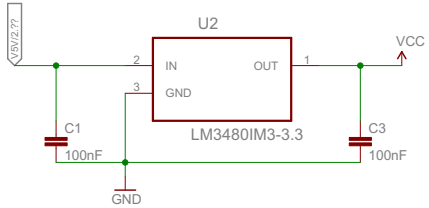

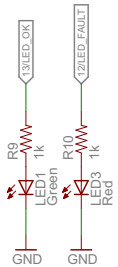

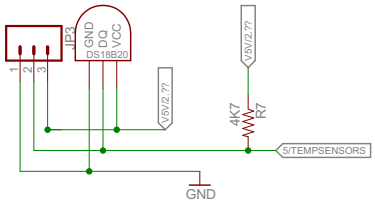

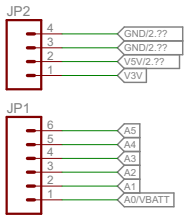

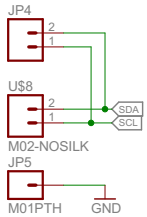

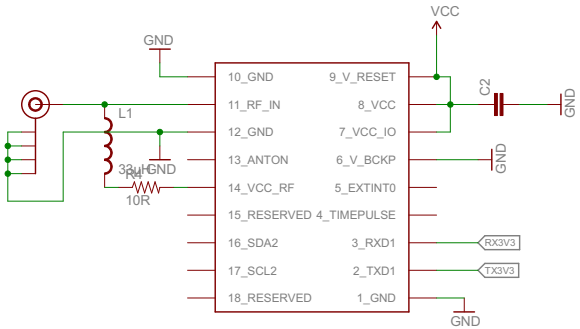

Title: HABduino3.0	
Version:	
22/10/2014 15:25:55	
Drawn By:	1/2