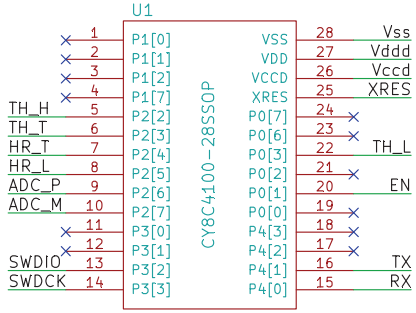

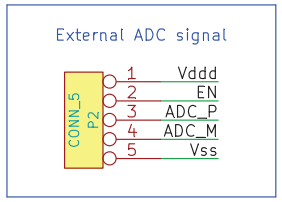

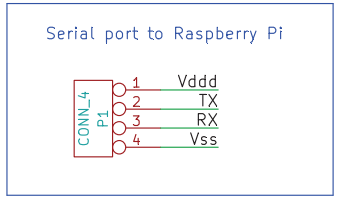

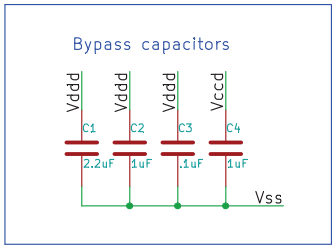

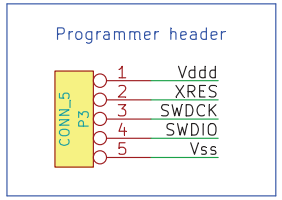

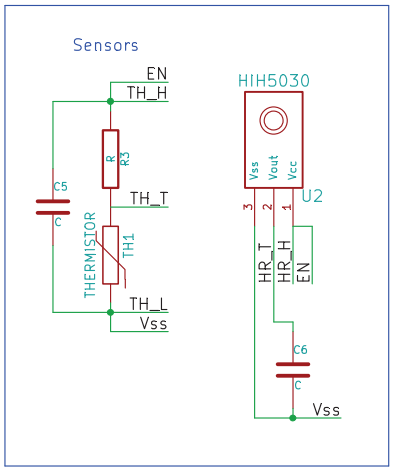

Copyright (c) 2014 – CAIMANICS (Pablo Bacho)
Published under the MIT License

File: TempHRpi.sch		
Sheet: /		
Title: EzTemp&RH for Raspberry Pi		
Size: A4	Date: 12 sep 2014	**Rev:**
KiCad E.D.A. eeschema (2013-07-07 BZR 4022)-stable		Id: 1/1