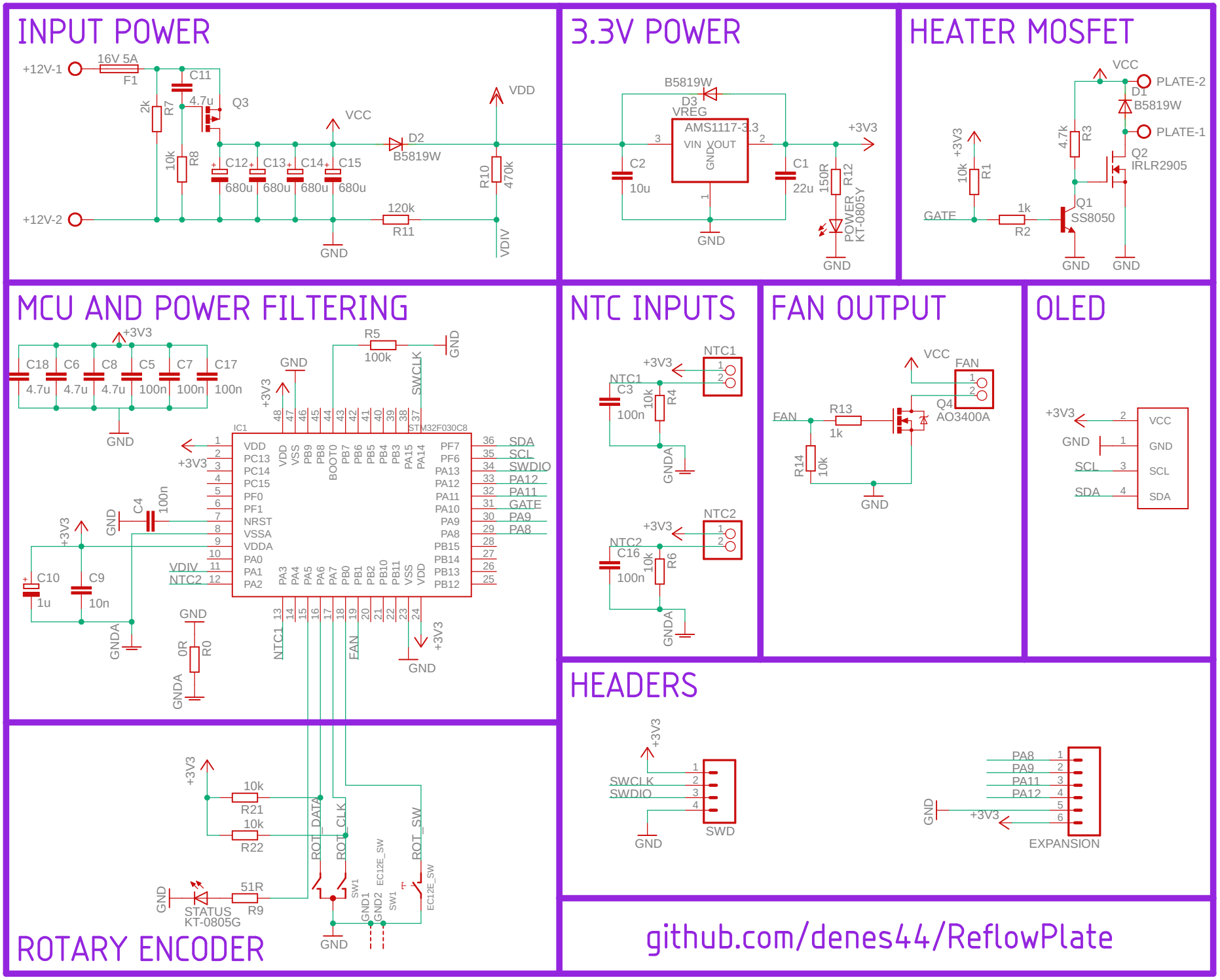
INPUT POWER
+12V-1
16V 5A
F1
C11
4.7u
Q3
2k
R7
10k
R8
C12
C13
C14
C15
680u
680u
680u
680u
VCC
D2
B5819W
VDD
R10
470k
+12V-2
120k
R11
GND
VDIV
3.3V POWER
B5819W
D3
VREG
AMS1117-3.3
VIN
VOUT
GND
C2
10u
C1
22u
+3V3
150R
R12
POWER
KT-0805Y
GND
HEATER MOSFET
VCC
PLATE-2
D1
B5819W
PLATE-1
4.7k
R3
Q2
IRLR2905
+3V3
10k
R1
GATE
1k
R2
Q1
SS8050
GND
GND
MCU AND POWER FILTERING
+3V3
C18
C6
C8
C5
C7
C17
4.7u
4.7u
4.7u
100n
100n
100n
GND
R5
100k
GND
SWCLK
IC1
STM32F030C8
VDD
PC13
PC14
PC15
PF0
PF1
NRST
VSSA
VDDA
PA0
PA1
PA2
PF7
PF6
PA13
PA12
PA11
PA10
PA9
PA8
PB15
PB14
PB13
PB12
SDA
SCL
SWDIO
PA12
PA11
GATE
PA9
PA8
VDIV
NTC2
C4
100n
C10
1u
C9
10n
GNDA
0R
R0
GNDA
NTC1
EAN
NTC INPUTS
NTC1
C3
100n
10k
R4
GNDA
NTC2
C16
100n
10k
R6
GNDA
FAN OUTPUT
VCC
FAN
Q4
AO3400A
FAN
R13
1k
R14
10k
GND
OLED
+3V3
GND
SCL
SDA
VCC
GND
SCL
SDA
HEADERS
+3V3
SWCLK
SWDIO
GND
SWD
PA8
PA9
PA11
PA12
GND
+3V3
EXPANSION
ROTARY ENCODER
+3V3
10k
R21
10k
R22
ROT_DATA
ROT_CLK
ROT_SW
EC12E_SW
GND
51R
R9
STATUS
KT-0805G
GND
github.com/denes44/ReflowPlate